PRIVATE STORM SEWER 1426 PPS (607861)

FURNITURE ON CONSIGNMENT
1400 N. TERRACE

GENERAL NOTES

1. STORM SEWER TO BE CONSTRUCTED, TESTED AND INSPECTED IN ACCORDANCE WITH CITY STANDARD SPECIFICATIONS AND POLICY ON CONSTRUCTION OF PUBLIC WORKS BY PRIVATE CONTRACT.
2. NO WORK SHALL BEGIN ON THIS PROJECT BEFORE REQUIRED BONDS ARE SUBMITTED TO THE CITY OF WICHITA, AND THE PROJECT INSPECTOR HAS BEEN NOTIFIED.
3. ALL AREAS OF PUBLIC R/W DISTURBED BY CONSTRUCTION OF THIS PROJECT ARE TO BE RESTORED IN ACCORDANCE WITH ADMINISTRATIVE REGULATION AR 78 OF THE CITY OF WICHITA.
4. TWO-WAY TRAFFIC ON 14th STREET AND PERSHING SHALL BE MAINTAINED DURING CONSTRUCTION.

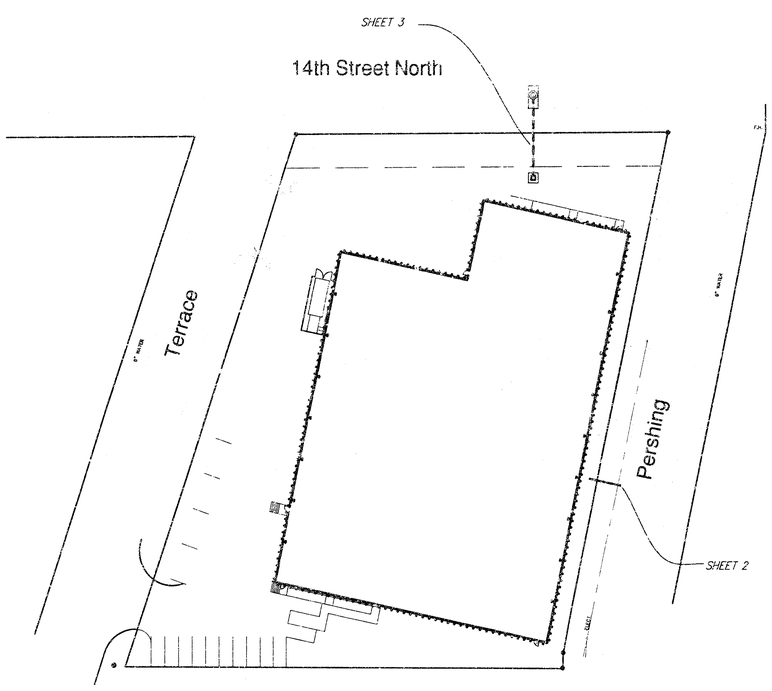



SCALE: 1" = 40'

INDEX OF SHEETS

1. TITLE SHEET
2. GRADING PLAN
3. STORM WATER SEWER PLAN
4. DROP INLET AND DRAIN DETAILS
5. STANDARD TYPE 'P' MANHOLE DETAILS

BENCHMARKS

SEE SHEET 3

APPROVED AS NOTED
BY CITY ENGINEER OF WICHITA

Sanitary Sewers _____

Storm Sewers URH 2/11/04

Driveway Approaches _____

Water Mains _____

Paving _____

NOTE TO CONTRACTORS

Inspection and testing for this project are to be provided by a Licensed Consulting Engineering Firm under contract with the Owner/Developer. Said Inspection to be in accordance with the City of Wichita standard construction engineering practices and certified by a Licensed Professional Engineer. No work shall be performed in dedicated easements or public right-of-way by the Contractor without such Inspection, nor shall any work be commenced without written authorization by the City Engineer.

REVISED AS BUILT 6-5-04
JCR

CITY OF WICHITA, KANSAS JAMES R. ARMOUR, P.E. - ACTING CITY ENGINEER

Ruggles & Bohm, P.A.
Engineering, Surveying, Land Planning
924 North Main
Wichita, Kansas 67203
www.rbkansas.com
(316) 264-8008
(316) 264-4621 fax
E-mail: info@rbkansas.com

2551D

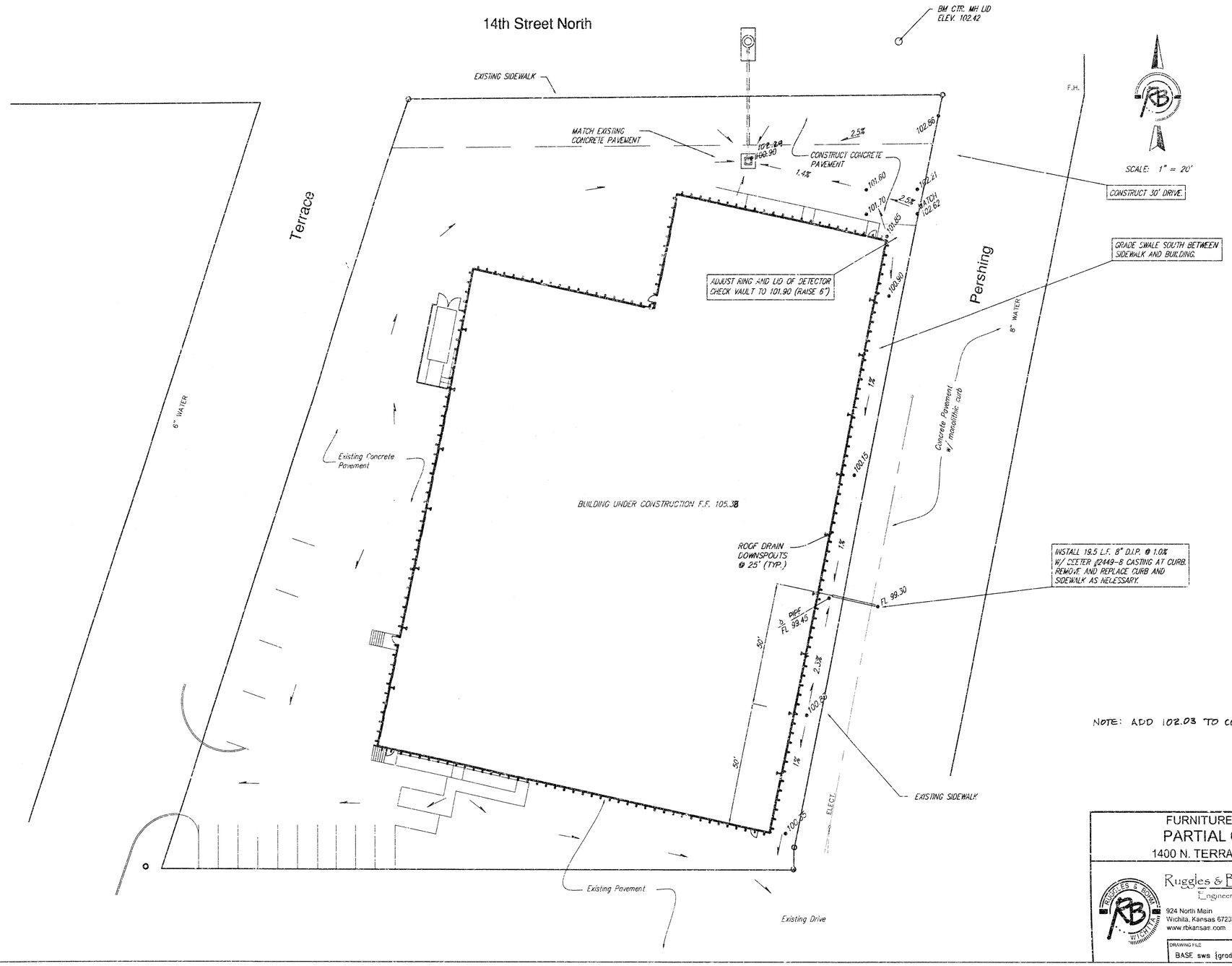

FURNITURE ON CONSIGNMENT

PARTIAL GRADING PLAN

1400 N. TERRACE, WICHITA, KANSAS

Ruggles & Bohm, P.A.
Engineering, Surveying, Land Planning
924 North Main
Wichita, Kansas 67203
www.rbkansas.com
(316) 264-8008
(316) 264-4621 fax
E-mail: info@rbkansas.com

DESIGN	TCR
DRAWN	RA
REVIEW	
UTILITY	
DATE	Feb. 10, 2004
R.B. JOB	2509
SHEET	2 of 5
DRAWING FILE	BASE sws [grading plan]
PROJECT NUMBER	1426.PPS

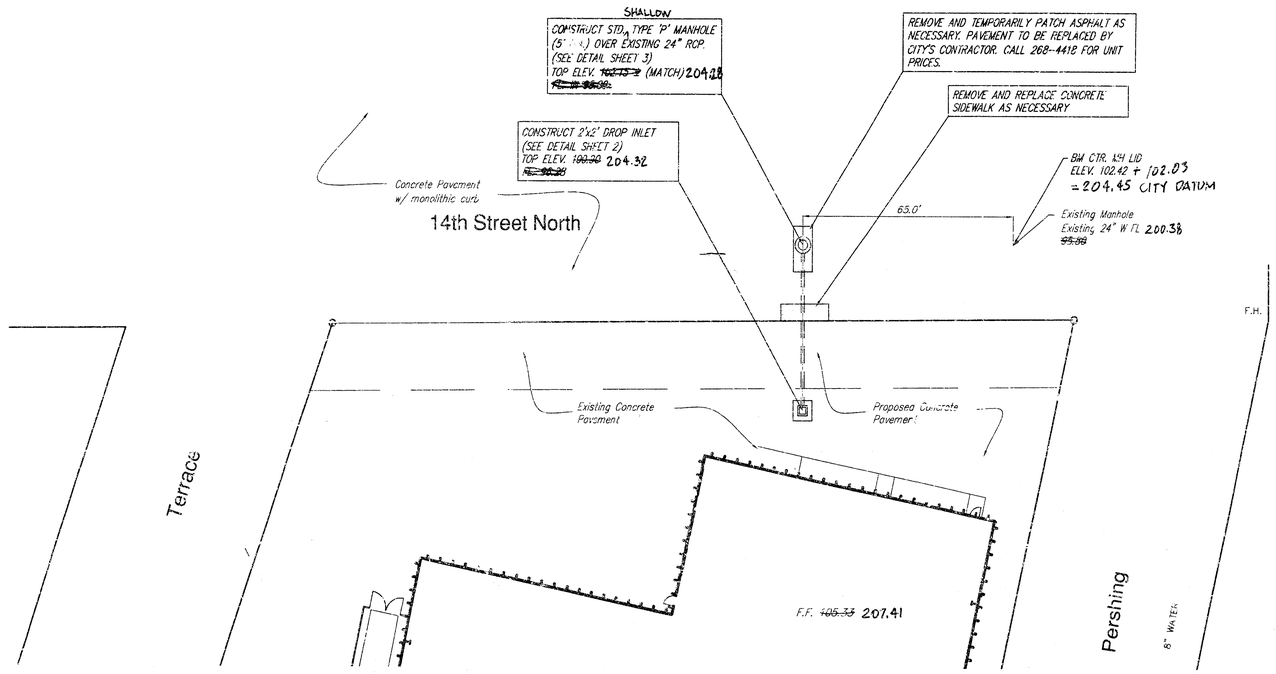

SCALE: 1" = 20'

BENCH MARK — C.O.W. DISC ON SIGNAL CASE @ S.W. COR. 19th & OLIVER
ELEV. 200.51

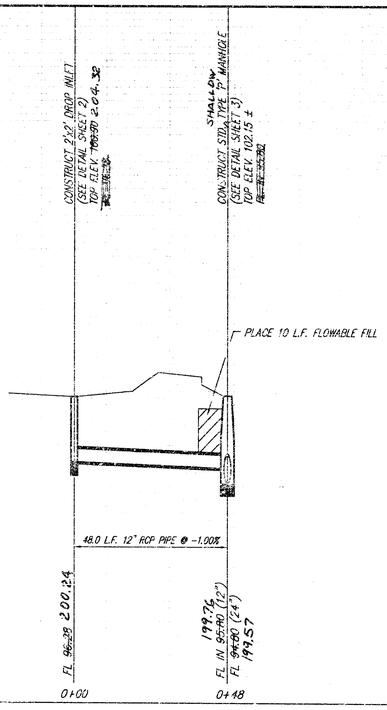

As built 6-5-04 JCP

Ruggles & Bohm, P.A.
Engineering, Surveying, Land Planning
924 North Main, Wichita, Kansas 67203
(316) 264-8008 (316) 264-4621 fax
www.rbkansas.com E-mail: info@rbkansas.com

RB JOB 25510
SHEET 5 OF 6

DESIGNED TCR
DRAWN RA
CHECKED
DATE Feb. 10, 2004
REVISIONS

PROJECT NUMBER 14-26 PPS
ADDENDUMS
BASE SHEET [1 of 6]

FURNITURE ON CONSIGNMENT
PRIVATE STORM SEWER
1400 N. TERRACE, WICHITA, KANSAS

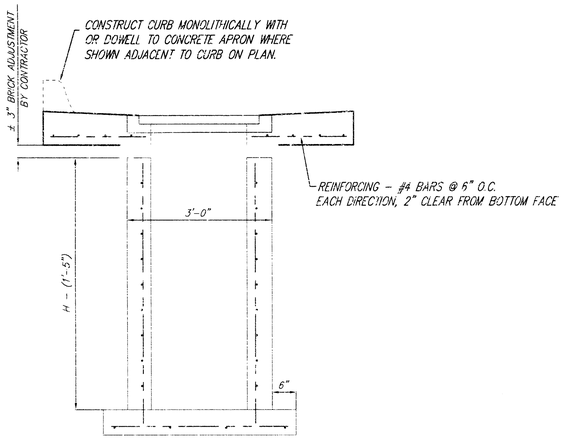

SECTION Y-Y

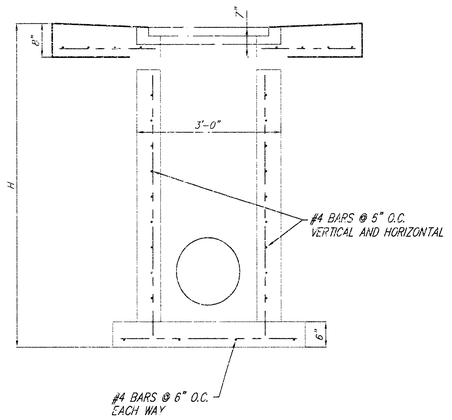

SECTION X-X

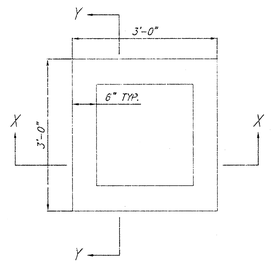

PLAN

NOTE: FRAME AND GRATE TO BE DEETER FOUNDRY 2410 OR APPROVED EQUAL INLET MAY BE PRECAST OR CAST-IN-PLACE.

DROP INLET DETAIL

GENERAL NOTES:

1. MORTAR USED IN MASONRY CONSTRUCTION SHALL CONTAIN 8 SACKS OF CEMENT PER CUBIC YARD. CONCRETE USED IN INLET WALLS AND BASES SHALL CONFORM TO THE REQUIREMENTS FOR CONCRETE PAVEMENT CONSTRUCTION AS SPECIFIED IN THE CITY STANDARD PAVING SPECIFICATIONS, USING CITY CONCRETE PAVEMENT MIX WITHOUT AIR ENTRAINING ADMIXTURE. MORTAR SHALL BE PLACED AROUND THE INLET FRAME AS SHOWN ON THE DRAWINGS WHEN INLETS ARE CONSTRUCTED IN UNPAVED AREAS. COMPLETED INLET SHALL BE WITHOUT LEAKS AND WATER TIGHT.
2. THE FLOORS OF ALL INLETS SHALL BE SHAPED WITH FLOW CHANNELS SUCH THAT THE INLETS WILL BE SELF CLEANING. USING 8-SACK SAND MIX CONCRETE. FLOW CHANNELS SHALL BE FORMED TO MATCH THE BOTTOM HALVES OF THE INFLOWING PIPES AND THE OUTFLOWING PIPE. INLET FLOORS SHALL HAVE SLOPES OF 3 INCHES PER FOOT IN THE AREAS OUTSIDE OF THE FLOW CHANNELS SLOPED TOWARD THE FLOW CHANNELS.
3. INLET COVER CASTINGS AND INLET FRAME CASTINGS SHALL CONFORM TO THE RE-QUIREMENTS AS INDICATED IN THE STANDARD SPECIFICATIONS AND AS SHOWN IN THE STANDARD DETAIL DRAWING.
4. THE ENDS OF ALL PIPES IN INLETS SHALL BE CUT OFF FLUSH WITH THE INSIDE FACE OF INLET WALL.

DROP INLET AND DRAIN TUBE DETAILS
WICHITA, KANSAS

Ruggles & Bohm, P.A.
Engineering Surveying Land Planning
924 North Main
Wichita, Kansas 67203
www.rbkansas.com
(316) 264-8008
(316) 264-4621 fax
E-mail: info@rbkansas.com

DESIGN TCR
DRAWN RA
REVIEW
UTILITY
PROJECT NUMBER 1426. PPS
DATE Feb. 10, 2004
DRAWING FILE BASE sws [sws]
PROJECT 2550
SHEET 4 OF 51

SEWER APPURTENANCES DETAILS

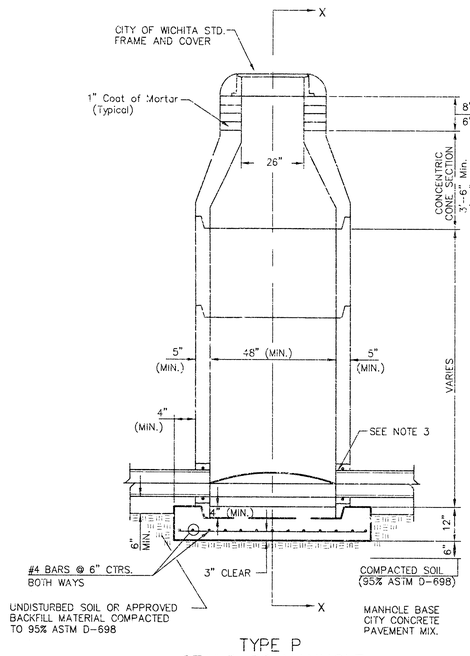

TYPE P
STANDARD MANHOLE

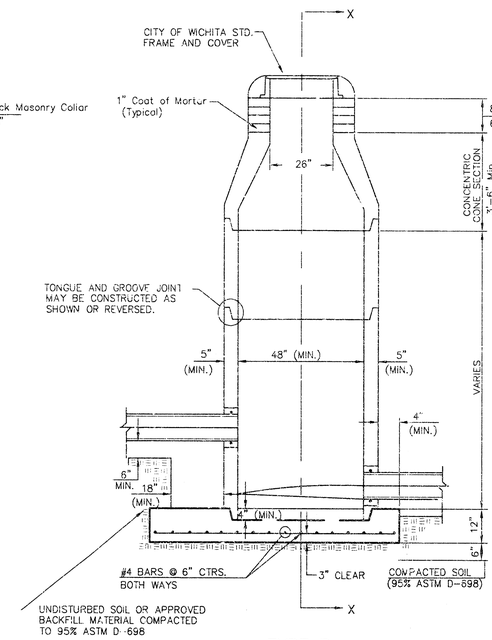

TYPE P
INSIDE DROP MANHOLE

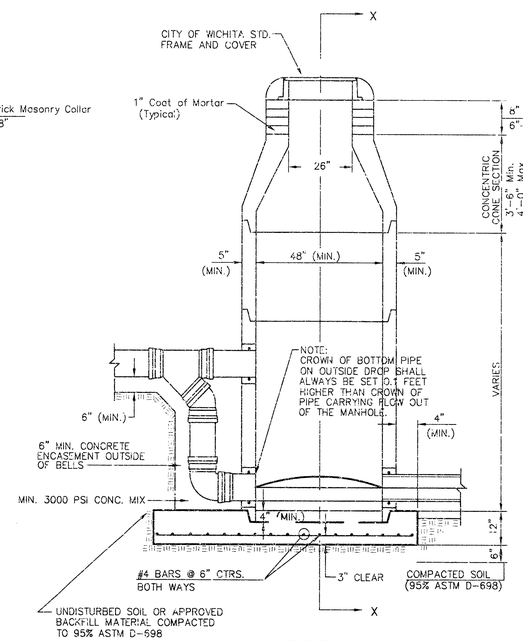

TYPE P
OUTSIDE DROP MANHOLE

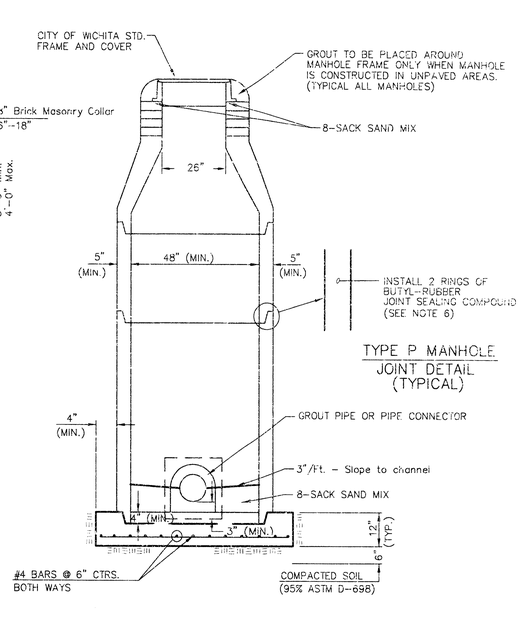

TYPE P MANHOLE
JOINT DETAIL
(TYPICAL)

SECTION X
(TYPICAL)

GENERAL NOTES

PRECAST MANHOLE NOTES

1. ALL PRECAST CONCRETE MANHOLE SECTIONS SHALL CONFORM TO THE LATEST REVISIONS OF A.S.T.M. C478 AS MODIFIED BY THE SPECIFICATIONS.
2. NON-SHRINK GROUT SHALL BE NON-METALLIC TYPE.
3. APPROVED FLEXIBLE WATERSTOP GASKETS SHALL BE INSTALLED TO JOIN THE SEWER TO THE MANHOLE WALL WHEN A.B.S. COMPOSITE PIPE OR P.V.C. PIPE IS USED. FOR OTHER TYPES OF PIPE THE SEWER SHALL BE GROUTED IN PLACE WITH NON-SHRINK GROUT. THE SEWER PIPE SHALL BE SUPPORTED WITH CONCRETE ENCASEMENT A MINIMUM OF 3 FEET FROM THE MANHOLE WALL AND TO THE FIRST JOINT FOR V.C.P. SUCH THAT THE JOINT REMAINS FLEXIBLE.
4. ALL INSIDE SURFACES OF THE CONCRETE MANHOLE WHICH WOULD BE EXPOSED TO SEWER GAS SHALL BE COATED WITH 2 COATS TNEMEC SERIES 66 HI-BUILD EPOXOLINE, DRY THICKNESS OF 8 MILS (MIN.)
5. EXTERIOR MANHOLE WALLS SHALL BE COATED WITH 1 COAT MOBILARMA 633 BITUMINOUS COATING.
6. JOINT SEALING COMPOUND SHALL BE KENT SEAL NO. 2 OR APPROVED EQUAL.
7. PRECAST MANHOLES SHALL BE SET AT LEAST 4 INCHES INTO THE MANHOLE BASE.
8. TOP OF MANHOLE FLOOR SLAB SHALL BE AT LEAST 3 INCHES BELOW THE FLOW LINE OF THE OUTLET PIPE TO INSURE SUFFICIENT MINIMUM THICKNESS OF STAPED INVERT.
9. LIFTING HOLES SHALL BE FILLED WITH NON-SHRINK GROUT AND THE INTERIOR SURFACE COATED AS SPECIFIED.
10. MORTAR USED IN MASONRY CONSTRUCTION SHALL CONTAIN 8 SACKS OF CEMENT PER CUBIC YARD. CONCRETE USED IN MANHOLE BASES SHALL CONFORM TO THE REQUIREMENTS OF CONCRETE FOR CONCRETE PAVEMENT CONSTRUCTION AS SPECIFIED IN THE CITY STANDARD PAVING SPECIFICATIONS USING CITY CONCRETE PAVEMENT MIX WITHOUT AIR ENTRAINING ADMIXTURE. MORTAR SHALL BE PLACED AROUND THE MANHOLE RING AS SHOWN ON THE DRAWINGS WHEN MANHOLES ARE CONSTRUCTED IN UNPAVED AREAS. MANHOLES CONSTRUCTED WHERE PIPE SIZES ARE SMALLER THAN 24" SHALL HAVE AN INSIDE DIAMETER OF 4'. MANHOLES CONSTRUCTED WHERE PIPE SIZES ARE 24" OR LARGER SHALL HAVE AN INSIDE DIAMETER OF 5'. COMPLETED MANHOLE SHALL BE WITHOUT LEAKS AND WATER TIGHT.
11. REINFORCING STEEL SHALL BE INSTALLED IN THE MANHOLE BASES AND SHALL CONSIST OF NO. 4 BARS PLACED ON 6" CENTERS IN BOTH DIRECTIONS. THE MANHOLE BASE REINFORCEMENT SHALL BE PLACED AT LEAST 3" ABOVE THE BOTTOM OF THE MANHOLE BASE. ALL COSTS FOR FURNISHING AND INSTALLING REINFORCING STEEL SHALL BE INCLUDED IN THE UNIT PRICE BID FOR THE MANHOLE.
12. OPENINGS SHALL BE CUT INTO THE MANHOLE WALL WHEN OUTSIDE DROPS ARE CONSTRUCTED ON EXISTING MANHOLES. SUCH OPENINGS CUT INTO EXISTING MANHOLES SHALL BE AS SMALL AS PRACTICAL TO FACILITATE INSTALLING AND GROUTING THE NEW PIPE IN PLACE. WATERSTOP GASKETS SHALL BE USED WITH P.V.C. AND A.B.S. COMPOSITE PIPE. THE NEW PIPE SHALL BE GROUTED INTO THE OPENING USING AN APPROVED NONSHRINK GROUT FOR THE FULL MANHOLE WALL THICKNESS. THE EXTERIOR OF THE COMPLETED CONNECTION SHALL BE SEALED WITH AN APPROVED BITUMINOUS COATING SUCH THAT THE CONNECTION WILL BE WATER TIGHT. FLOOR OF MANHOLE SHALL BE MODIFIED TO FORM NEW FLOW CHANNEL FOR THE NEW CONNECTION AS INDICATED BY THE DRAWING. THIS WORK, INCLUDING MODIFICATION OF MANHOLE FLOOR, SHALL BE PAID FOR AT THE UNIT PRICE BID FOR OUTSIDE DROP STACK CONSTRUCTED ON EXISTING MANHOLE.
13. THE FLOORS OF ALL MANHOLES SHALL BE SHAPED WITH FLOW CHANNELS SUCH THAT THE MANHOLES WILL BE SELF CLEANING AND FREE OF AREAS WHERE SOLIDS COULD BE DEPOSITED AS SEWAGE FLOWS THROUGH THE MANHOLE FROM ALL INLET PIPES TO THE OUTLET PIPE. FLOW CHANNELS SHALL BE FORMED TO MATCH THE BOTTOM HALVES OF THE INFLOWING PIPES AND THE OUTFLOWING PIPE AS SHOWN BY THE DRAWINGS EXCEPT FOR INSIDE DROP MANHOLES. FLOW CHANNELS FOR INSIDE DROP MANHOLES SHALL BE CONSTRUCTED AS INDICATED BY THE DRAWING. MANHOLE FLOORS SHALL HAVE SLOPES OF 3 INCHES PER FOOT IN THE AREAS OUTSIDE OF THE FLOW CHANNELS SLOPED TOWARD THE FLOW CHANNELS. PIPES LAID THROUGH MANHOLES SHALL HAVE THE TOP HALF REMOVED TO NEAT LINES FOR THE FULL INSIDE DIAMETER OF THE MANHOLE. MANHOLE FLOORS SHALL THEN BE SHAPED AROUND THE BOTTOM HALF OF THE PIPE WHICH FORMS THE FLOW CHANNEL.
14. PIPES INSTALLED WITHIN THE EXCAVATION MADE FOR THE MANHOLE SHALL BE CRADLED WITH CONCRETE TO THE LIMITS OF THE MANHOLE EXCAVATION. WHEN CLAY PIPE IS USED, THE CRADLE SHALL EXTEND TO THE FIRST JOINT OUTSIDE THE MANHOLE. THE CRADLE SHALL BE TERMINATED AT THE CLAY PIPE JOINT IN A MANNER WHICH WILL MAINTAIN THE FLEXIBILITY OF THE JOINT. COST OF CRADLE WITHIN MANHOLE EXCAVATION OR TO CLAY PIPE JOINTS ADJACENT TO MANHOLE SHALL BE INCLUDED IN THE UNIT PRICE BID FOR THE MANHOLE.
15. MANHOLE COVER CASTINGS AND MANHOLE FRAME CASTINGS SHALL CONFORM TO THE REQUIREMENTS AS INDICATED IN THE STANDARD SPECIFICATIONS AND AS SHOWN IN THE STANDARD DETAIL DRAWING.
16. THE VERTICAL DROP IN INSIDE DROP MANHOLES SHALL NOT EXCEED 2' FOR INFLOWING PIPES SIZED 12" OR SMALLER AND 2' FOR INFLOWING PIPES LARGER THAN 12". THE CROWNS OF INFLOWING PIPES SHALL NEVER BE SET LOWER THAN THE CROWN OF THE OUTFLOWING PIPE.
17. STANDARD MANHOLES AND STANDARD INSIDE DROP MANHOLES SHALL BE BID AS STANDARD MANHOLES FOR THE TYPE AND DIAMETER INDICATED. OUTSIDE DROP MANHOLES SHALL BE BID AS STANDARD OUTSIDE DROP MANHOLES FOR THE TYPE AND DIAMETER INDICATED. ALL MANHOLE DIAMETERS WILL BE 4' UNLESS INDICATED OTHERWISE.
18. A BRICK MASONRY COLLAR SHALL BE INSTALLED BETWEEN THE CAST IRON FRAME AND THE CONCENTRIC CONE. THE COLLAR WILL HAVE 8" WALLS AND A VERTICAL HEIGHT OF 6" MINIMUM AND 18" MAXIMUM. A 1" COAT OF MORTAR WILL BE PLASTERED ON THE OUTSIDE OF THE COLLAR. THE USE OF PRE-CAST CONCRETE SPACERS FOR MANHOLE TOP ADJUSTMENT IS ALSO ALLOWED.

THE CITY OF WICHITA
CITY ENGINEER'S OFFICE
CITY HALL - SEVENTH FLOOR
455 NORTH MAIN STREET
WICHITA, KANSAS 67202
(316) 268-4501
(316) 268-4114 FAX

STANDARD TYPE 'P' MANHOLES

- CITY ENGINEER

PROJECT NUMBER	OCA #
1426 PPS	607861
DATE MAR 96	SHEET 5 OF 5

18 02 05 06