PRIVATE STORM WATER SEWER IMPROVEMENTS
and SITE GRADING IMPROVEMENTS
to serve
STONEHEDGE 3RD ADDITION
CITY OF WICHITA, KANSAS

Jim Armour, P.E. City Engineer

Private Project Number

1428 PPS (607861)

PRIVATE SANITARY SEWER FOR STONEHEDGE 3RD ADDITION

1432PPS (607861)

Sheet Index

Title Sheet	1
General Notepage	2
RCBC & SWS Plan & Profiles	3
SS Plan & Profile	4
Site Grading Plan	5
Proposed Site Plan	6
RCBC Connection, Wingwall, & Drop Inlet Details	7
Grading Details	8
RCBC Details	9–10
Single Type 1 Inlet Details	11
Reinf. Concrete Manhole Details	12
Standard Type "P" Manhole Details	13
Erosion Control Details	14–16
Copy of Plat	17

Benchmarks

BM #1 – "□" Cut on the West End of the Median in 35th St. North on the East Side of Rock Road
Elevation = 197.87 (City Datum) 1306.35 (M.S.L.)

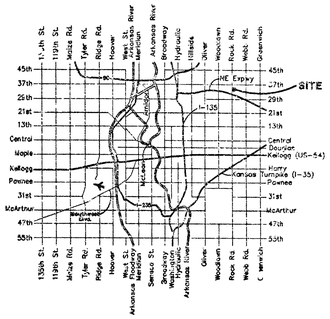

Vicinity Map

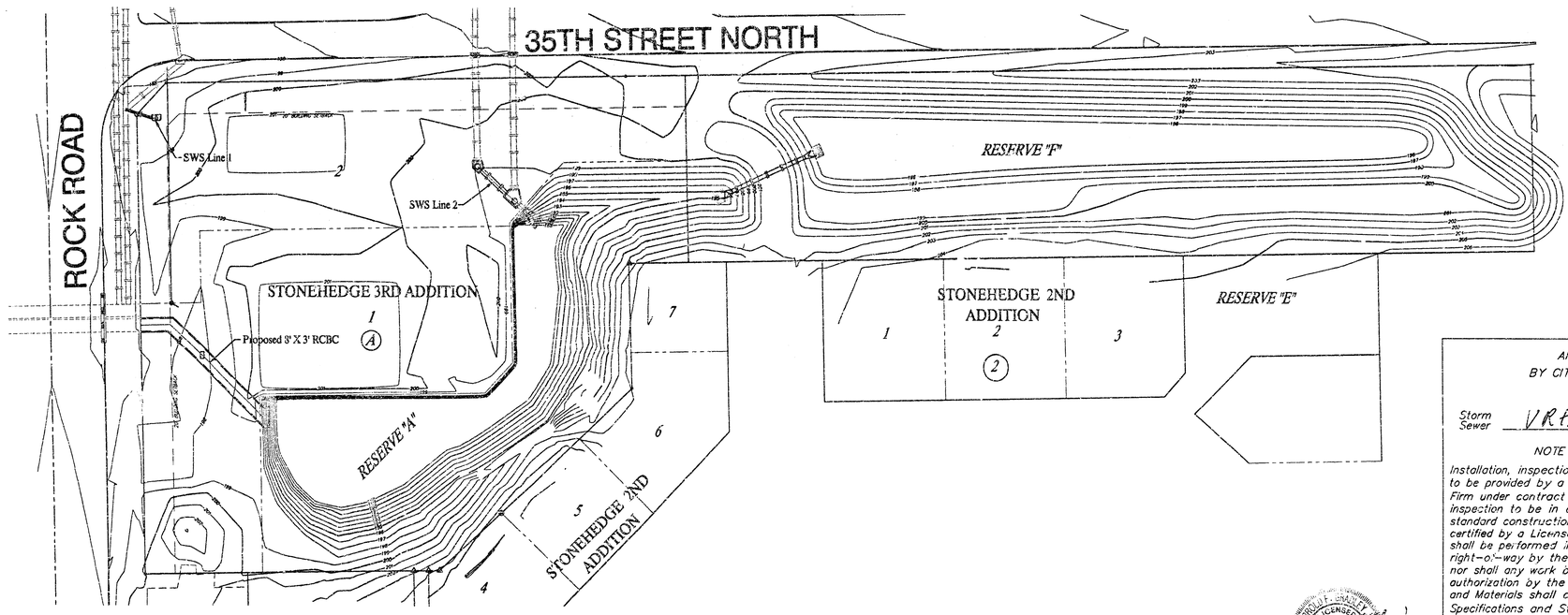

SCALE: 1" = 40'

As Built 7/29/04 KK

APPROVED AS NOTED
BY CITY ENGINEER OF WICHITA

Storm Sewer VRH 3/23/04

NOTE TO CONTRACTORS

Installation, inspection, and testing for this project is to be provided by a Licensed Consulting Engineering Firm under contract with the Owner/Developer. Said inspection to be in accordance with the City of Wichita standard construction engineering practices and certified by a Licensed Professional Engineer. No work shall be performed in dedicated easements or public right-of-way by the Contractor without such inspection nor shall any work be commenced without written authorization by the City Engineer. All Construction and Materials shall comply with the City of Wichita Specifications and Standards (on file and available in the City Engineer's Office).



BAUGHMAN COMPANY, P.A.
ENGINEERING, SURVEYING, & PLANNING
315-262-7271 • 315 ELLIS • WICHITA, KANSAS 67211

GENERAL NOTES

1. The Contractor will be required to contact Kansas One Call at 687-2470 to request the local utility companies to mark any existing lines with in the project limits a minimum of forty eight (48) hours prior to any excavation or working.

2. Existing utilities and their locations, as shown on the plans, represent the best information obtainable for design. The Contractor shall be aware that construction will occur in close proximity to existing utilities, and that any conflicts with such utilities shall be reported to the Engineer.

3. The Contractor shall give all property owners and/or tenants of developed property abutting the Project Limits a minimum of ten (10) days advance prior notice to the start of construction.

4. All project waste including any trees, milled asphalt, rubble from miscellaneous structures, abandoned pipes, excess excavation & etc. shall be disposed of on sites to be provided by the Contractor. These sites shall be approved by the Engineer as to suitability, appearance and site location. Locations that, in the opinion of the Engineer, will leave an unsightly appearance will not be approved. All disposal sites must be approved by the Kansas Department of Health and Environment. Material either stockpiled or disposed of in a flood plain would require a Kansas State Board of Agriculture permit. Any material dumped in waters of the United States or wetlands is subject to U.S. Corps. of Engineers permitting regulations. Any material buried or stockpiled beyond approved construction limits would require additional archaeological investigations unless buried in a previously approved borrow location.

5. Prior to bidding the project, each bidder shall visit the site and satisfy himself of surface & subsurface conditions. Each bidder shall also fully inform himself as to the extent of the scope of work to be performed. Each bidder shall also be aware that no additional compensation will be awarded for extra work that should have been evaluated prior to bidding.

6. The Reinforced Concrete Box Culvert (RCBC) may be pre-cast, unless otherwise noted. The RCBC shall conform to ASTM C-850 Standards for loading unless otherwise noted in the plans. The bedding shall be Type I Bedding conforming City Specifications or clean, crushed concrete. Bedding material shall be compacted. Contractor shall provide the Engineer with shop drawings of the structures for approval prior to construction.

7. All Pre-cast RCB Sections shall have filter fabric wrapped at each joint to prevent infiltration of fines and other material into the conduit.

8. Contractor shall be responsible for implementing erosion control methods during construction to prevent unnecessary silt/sediment discharge through downstream properties and/or storm sewer systems. Contractor shall install and maintain erosion controls as directed by the Engineer These controls may include but not limited to: hay bales; silt fences, Excelsior I Erosion Control Blanket (Curlex), or other controls necessary to inhibit sediment runoff during construction.

9. The Contractor shall not start work on the Project until the Project Inspector is assigned and is present on site. Any work done without inspection will be required to be uncovered for inspection.

10. The existing sprinkler system within the property shall be plugged as lines are cut during construction. The sprinkler system will not need to be replaced and all salvageable equipment shall be returned to the property owner. The water shall be turned off at the meter prior to removal. Cost of the plugging of the system shall be INCIDENTAL to the bid item "Site Restoration."

11. This Project is subject to a Storm Water Pollution Prevention Plan. All erosion control devices shall be installed prior to earthwork or any other grading operations within this site. Best Management Practices (BMPs) and Good Housekeeping Practices shall be adhered to at all times. Contractor shall be aware that vehicles leaving this site tracking significant mud/soil onto public streets may be subject to fines by the City of Wichita and/or other governmental agencies.

12. Following pond construction, the Contractor shall be responsible for re-filling the pond to the static water elevation of 196.00 (City Datum). Approximate volume of water needed to fill is the Pond is 902,000 Gallons. Contact Wayne Bonnison at 219-8925 for installation of a fire hydrant meter.

13. Gabions constructed in this Project shall meet City of Wichita Standard Specifications (Section 305, 300-13) and other specifications as contained herein. Gabion baskets shall be pre-formed type basket as manufactured by Maccaferri (314) 842-8000, Modular Gabions Systems 1-800-324-8282, or approved equal.

14. Geotechnical Services, Inc. performed soil borings for this site, and the subsequent boring logs and report are to be part of this Project. Compaction requirements (min. 95% Standard Proctor) and maximum lift thicknesses (9" lifts) are to be followed. Testing will be the responsibility of the Owner.

15. Earthwork quantities contained herein reference approximately one (1) foot below future paved and building slab surfaces. NO FACTORS FOR EXPANSION/COMPACTION have been used for the calculation of the estimated quantities. Contractor shall be responsible for achieving grades shown on this Grading Plan.

16. The existing signs and rock wall on the site shall be removed, stockpiled, and returned to the owner. Contact Mike or Tom Boyd (Owner) at (316) 685-5341 to coordinate.

17. The Contractor shall conform to all applicable safety regulations and City of Wichita Specifications and Standards.

PROJECT NUMBER	SHEET NAME	ENGINEERING DIRECTORY
1428 PPS (607861)	Notepage	F:\Boyd\Land\dwg

DESIGN	DRAWN	APPROVED	DATE	SCALE	BAUGHMAN NO
TPV	TPV	JFB	March 2004	None	03-12-E769

STONEHEDGE 3RD ADDITION

GENERAL NOTEPAGE

35TH STREET NORTH AND ROCK ROAD

BAUGHMAN COMPANY, P.A.
ENGINEERING, SURVEYING, & PLANNING
316-262-7271 • 315 ELLIS • WICHITA, KANSAS 67211

BENCHMARK:
BM #1 – "□" Cut on the West End of the Median in 35th St. North on the East Side of Rock Road
Elevation = 197.87 (City Datum) 1306.35 (M.S.L.)

SCALE:
1" = 20' HORIZONTAL
1" = 5' VERTICAL

Remove Ex. Wingwalls of North RCBC and Brick Ex. Six Opening. Cost to be INCIDENTAL to the Bid Item "Removal of Existing Structures".

RCBC Sta. 0+00.00, Remove Ex. Concrete Wing Wall. Dowel into Ex. Concrete Headwall w/ #4 Rebar and Begin Construction of 8' X 3' RCBC. See Connection Detail.

Remove Ex. Trees That Conflict with the Proposed Construction

Remove Ex. Rock Wall as Necessary. Cost to be INCIDENTAL to "Removal of Existing Structures".

NOTE:
Trees/Shrubs to be removed are marked thus:

RCBC Sta. 0+48.28, Construct 4' X 2' Drop Inlet Over Proposed RCBC. See Drop Inlet Details. Top Elev. = 198.45

Remove Ex. 36" RCP and Wingwalls after Completion of the Proposed RCBC

RCBC Sta. 0+20.00, Deflect 8' X 3' RCBC 45°00' (R)

RCBC Sta. 1+04.86, End Construction of 8' X 3'. Construct Concrete Headwall and Weir Section. See Weir Section Details.

ROCK ROAD
60' R/W
STONEHEDGE 3RD ADDITION
1
A
RESERVE A
Ex. Pond
Proposed 8" SS
30' Drainage Easement
8'X3' RCBC
ROCK WALL
ASTM C76 CL III
199
200
201
202
198
197

SCALE:
1" = 20' HORIZONTAL
1" = 5' VERTICAL

Sta. 0+00.00, Begin SWS Line 1. Core into Ex. Brick Manhole, Grout, and Seal Tight.

CAUTION!
Existing O/H Elec U/G SWB Crossing

SWS Sta. 0+21.65, End SWS Line 1. Construct Inlet (Single) (Type 1) (5' 4" X 4' 4") Top Elev. = 199.50

Contractor to be Responsible for TV Testing this Line

ROCK ROAD
60' R/W
35TH STREET NORTH
E=196.72
STONEHEDGE 3RD ADDITION
2
A
30' UTILITY EASEMENT
Proposed 8" SS
50' R/W
24" RCP
SSMH
Sign
GUY
198

SCALE:
1" = 20' HORIZONTAL
1" = 5' VERTICAL

Sta. 0+00.00, Begin SWS Line 2. Construct Reinforced Concrete Manhole. Install Neenah R-2556 Catch Basin Frame and Cover or Approved Equal. Remove ±67 L.F. 45" X 29" HERCP (S). Contractor to Verify Depth of Ex. HERCP. See Reinforced Concrete Manhole Details. Top Elev. = 199.40

Sta. 0+33.13, SWS Line 2. Construct Reinforced Concrete Manhole. Remove ±38 L.F. 45" X 29" HERCP (S). Contractor to Verify Depth of Ex. HERCP. See Reinforced Concrete Manhole Details. Top Elev. = 199.70

Sta. 0+49.77, End SWS Line 2. Install 1-42" Concrete End Section. Anchor the End Section to the 42" RCP. Install 6 S.Y. Light Stone Rip Rap

Removal of Ex. HERCP and Concrete Cap shall be INCIDENTAL to the Bid Item "Removal of Existing Structures"

35TH STREET NORTH
E=196.72
STONEHEDGE 3RD ADDITION
2
A
RESERVE A
40' DRAINAGE EASEMENT
45"X29" HERCP
24" RCP
CB
SSMH
Sign
LP
Approx. Waters Edge
200
199
198
197
196
195
194
193
192
191
190
189
188

RCBC Sta. 0+00.00, Depart into Ex. Concrete Headwall w/ #4 Rebar and Begin 8' X 3' RCBC. See Connection Detail.
RCBC Sta. 0+20.00, Deflect 8' X 3' RCBC 45°00' (R)
RCBC Sta. 0+48.28, Construct 4' X 2' Drop Inlet Over Proposed RCBC. See Drop Inlet Details. Top Elev. = 198.45
Ex. RCP, (Plan Abandoned)
RCBC Sta. 1+04.86, End Construction of 8' X 3'. Construct Concrete Headwall and Wall Section. See Weir Section Details.
Existing Ground @ ℄ of Pipe
Proposed Ground @ ℄ of Pipe
Prop. Water Elevation 196.0
104.86 L.F. 8' X 3' ASTM 850 RCBC @ 2.356
191.53 = Flow
192.00 = Flow
192.67 = Flow
193.89 = Flow
194.00 = Flow
0+00
0+20.00
0+48.28
1+00
1+04.86
205
200
195
190
185

Sta. 0+00.00, Begin SWS Line 1. Core into Ex. Brick Manhole, Grout, and Seal Tight.
Ex. 6'x6'x6' SWB
SWS Sta. 0+21.65, End SWS Line 1. Construct Inlet (Single) (Type 1) (5' 4" X 4' 4") Top Elev. = 199.50
Existing Ground @ ℄ of Pipe
Proposed Ground @ ℄ of Pipe
21.65 L.F. 15" RCP @ +4.000%
191.74 = Flow Out
192.99 = Flow In
194.65 = Flow Out
0+00
0+21.65

Sta. 0+00.00, Begin SWS Line 2. Construct Reinforced Concrete Manhole. Install Neenah R-2556 Catch Basin Frame and Cover or Approved Equal. Top Elev. = 199.40
Sta. 0+33.13, SWS Line 2. Construct Reinforced Concrete Manhole. Top Elev. = 199.70
SWS Sta. 0+49.77, End SWS Line 1. Install 1-42" Concrete End Section. Anchor End Section to 42" RCP.
Existing Ground @ ℄ of Pipe
Proposed Ground @ ℄ of Pipe
Prop. Water Elevation 196.0
33.13 L.F. 36" RCP @ -1.695%
16.64 L.F. 42" RCP @ -2.000%
192.74 = Flow In (N)
192.11 = Flow Out
191.85 = Flow In (NW)
192.17 = Flow In (N)
191.60 = Flow Out
191.27 = Flow Out
0+00
0+33.13
0+49.77
205
200
195
190
185

PROJECT NUMBER	SHEET NAME	ENGINEERING DIRECTORY
1428 PPS (607861)	RCBC	F:\Boyd\Land\dwg

DESIGN	DRAWN	APPROVED	DATE	SCALE	BAUGHMAN NO
TPV	TPV	JFB	March 2004	Noted	03-12-E769

STONEHEDGE 3RD ADDITION
RCBC & SWS PLAN & PROFILES
35th STREET NORTH & ROCK ROAD

BAUGHMAN COMPANY, P.A.
ENGINEERING, SURVEYING, & PLANNING
316-262-7271 • 315 ELLIS • WICHITA, KANSAS 67211

BENCHMARK:
BM #1 – "□" Cut on the West End of the Median in 35th St. North on the East Side of Rock Road
Elevation = 197.87 (City Datum) 1306.35 (M.S.L.)

CONTOURS KEY
200 Existing Contours
200 Proposed Contours

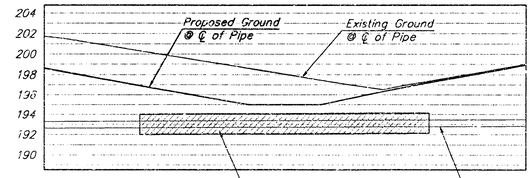

SS ENCASEMENT PROFILE

SCALE:
1" = 30' HORIZONTAL

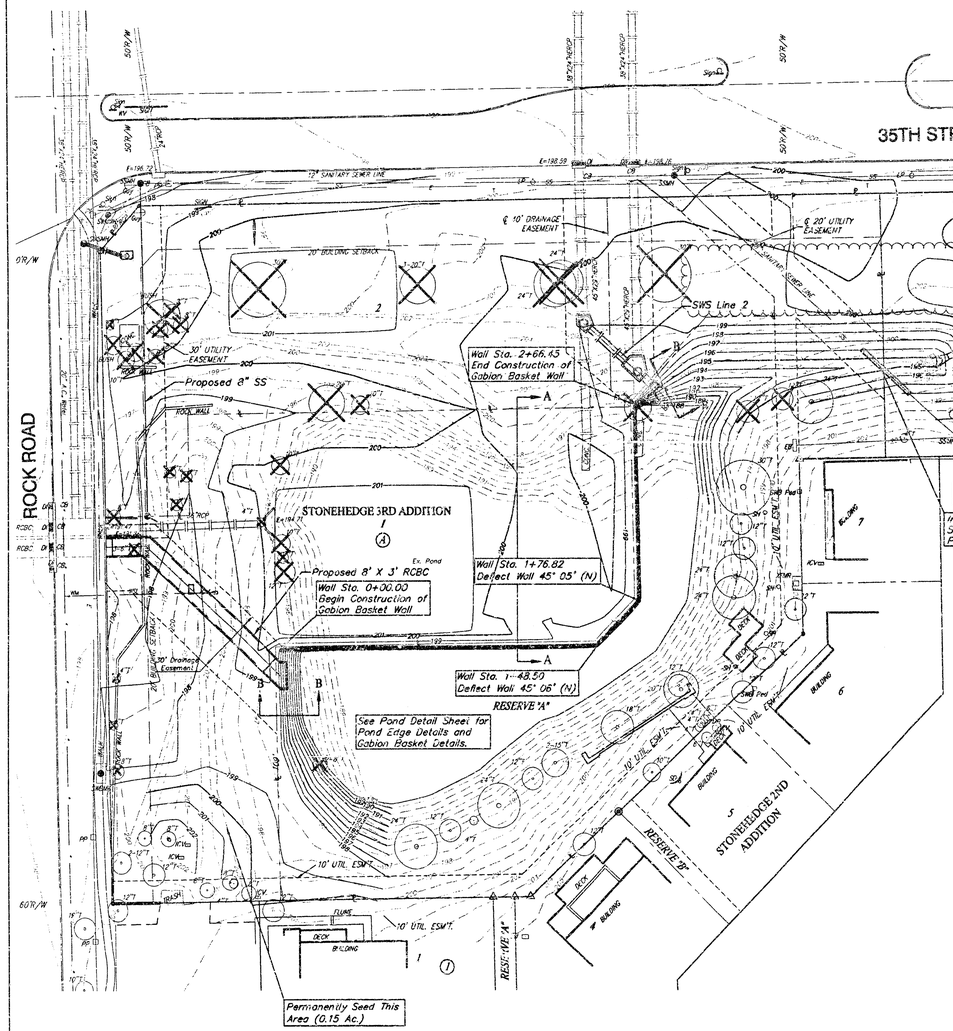

1. The Contractor shall drain the existing pond and remove the organic material to solid, non-yielding ground. The organic material is approximately two (2) feet deep and covers the entire pond bottom.
2. The existing top soil on the site shall be removed to a depth of 4"-6". The top soil shall be stockpiled on site for later use.
3. Trees within the Project Limits that are marked to be removed shall be completely removed, including the root balls.
4. Estimated Earthwork Quantities shown on this sheet have been calculated from between the existing ground, minus the top soil removed, and the proposed graded surface. The quantities shown for the Excavation and Compacted Fill have NOT been adjusted by any factors.
5. See the Stormwater Water Pollution Prevention Plan for both temporary and permanent seeding specifications. Seeding quantities shown on this plan are for Information Only. Cost of seeding, both temporary and permanent, shall be INCIDENTAL to "Site Restoration".
6. The Tree Rows to be Removed from the borrow excavation area contains trees that range in size from 1/2" scrub to 30" mature trees. The Contractor shall visit the site to prior to preparing bids to better understand the scope of the removal. No additional compensation will be allowed for removal of larger trees. Trees to be removed in the southern tree row shall be marked by the Engineer.

PROPOSED POND DATA:
Static Elevation: 196.0
Pond Bottom: 188.0
Surface Area: 0.29 Ac.

ESTIMATED EARTHWORK QUANTITIES:
Top Soil Removed: 1,795 C.Y.
Excavation: 9,315 C.Y.
Compacted Fill: 7,650 C.Y.

ESTIMATED SEEDING QUANTITIES:
Temporary: 1.48 Acres
Permanent: 1.68 Acres

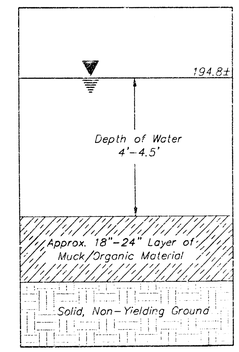

CROSS SECTION C
EXISTING POND

NOTE:
Trees/Shrubs to be removed are marked thus:

As Built 7/23/04 KK

PROJECT NUMBER			SHEET NAME	ENGINEERING DIRECTORY
			Grade	F:\Boyd\Land\dwg
DESIGN	DRAWN	APPROVED	DATE	SCALE	BAUGHMAN NO
TPV	TPV	JFB	March 2004	Noted	03-12-6769

STONEHEDGE 3RD ADDITION
SITE GRADING PLAN
35TH STREET NORTH AND ROCK ROAD

BAUGHMAN COMPANY, P.A.
ENGINEERING, SURVEYING, & PLANNING
316-262-7271 • 315 ELLIS • WICHITA, KANSAS 67211

SHEET 5 OF 17

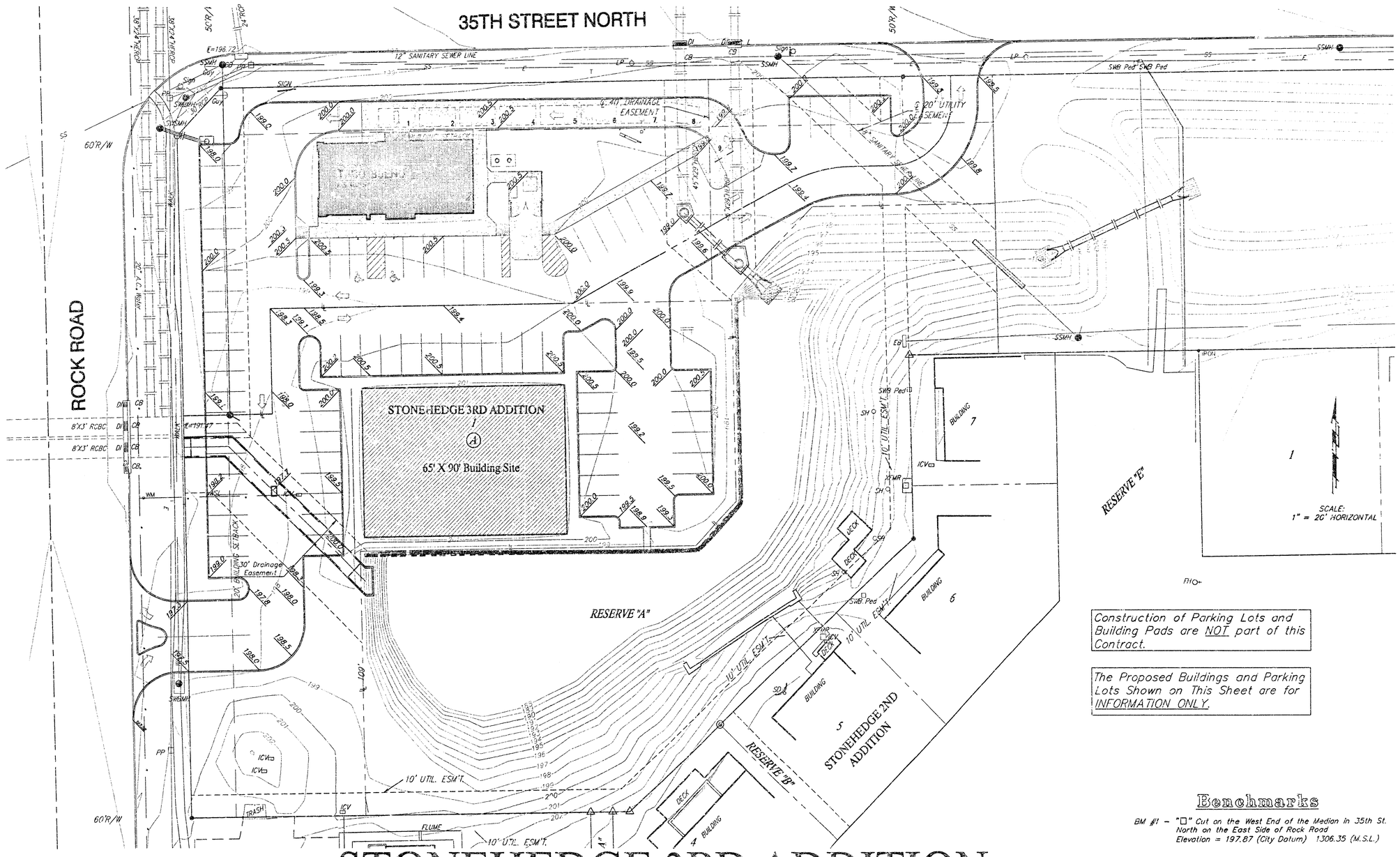

STONEHEDGE 3RD ADDITION

Benchmarks

BM #1 – "□" Cut on the West End of the Median in 35th St. North on the East Side of Rock Road
Elevation = 197.87 (City Datum) 1306.35 (M.S.L.)

As Built 7/29/06 + 10/06

PROJECT NUMBER			SHEET NAME	ENGINEERING DIRECTORY	
			Site	F:\Boyu\Land\dwg	
DESIGN	DRAWN	APPROVED	DATE	SCALE	BAUGHMAN NO
TVP	TVP	JFB	March 2004	None	03-12-E769

STONEHEDGE 3RD ADDITION
PROPOSED SITE PLAN
35th STREET NORTH AND ROCK ROAD

BAUGHMAN COMPANY, P.A.
ENGINEERING, SURVEYING, & PLANNING
316-262-7271 • 315 ELLIS • WICHITA, KANSAS 67211

SHEET 6 OF 17

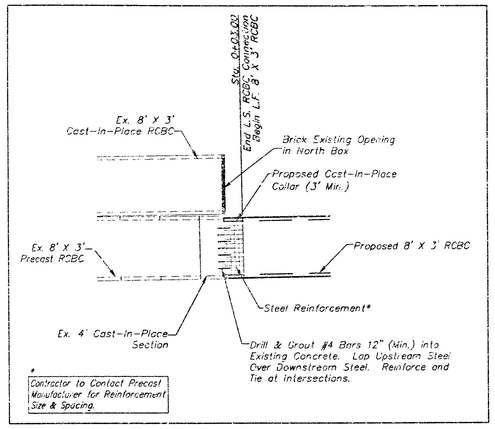

CONNECTION DETAIL

1. The stations for the conversion between the Cast-In-Place Sections and the Precast Sections are tentative. No additional compensation will be awarded for changes on the the lengths of the connections.
2. The Lump Sum Bid Items "RCBC Connection" & "RCBC Weir Section" shall include all concrete, reinforcement, removal, labor, excavation, and all other incidentals necessary to connect the proposed RCBC to the existing RCBC and to construct the Weir Section.
3. All Existing Concrete Surfaces Adjacent to the Proposed Concrete Shall be Cleaned Thoroughly by Brushing and Soaked with Water Immediately Prior to Placing New Concrete.
4. All exposed concrete edges are to be beveled 3/4".
5. All reinforcing steel to have minimum 1 1/2" cover.

Minimum Splice Length	
#4	16"
#5	20"
#6	24"

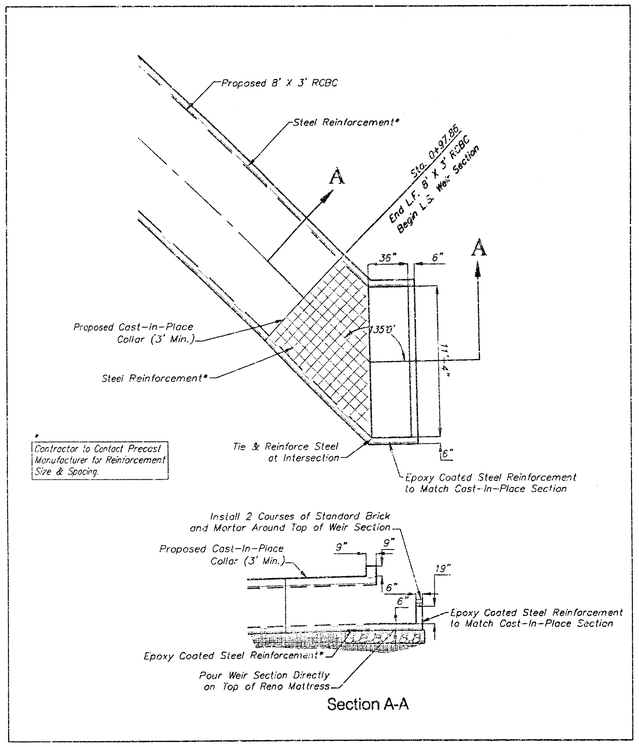

WEIR SECTION DETAILS

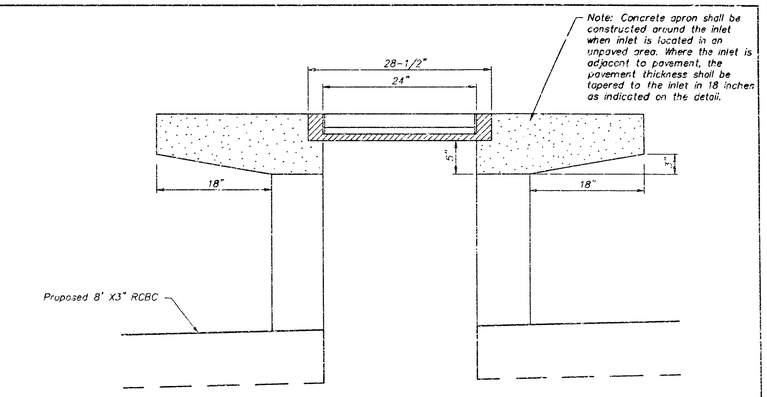

DROP INLET DETAILS

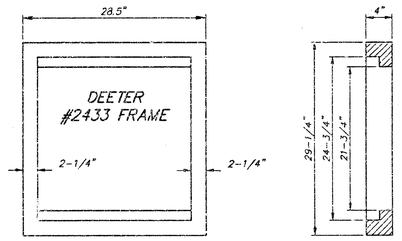

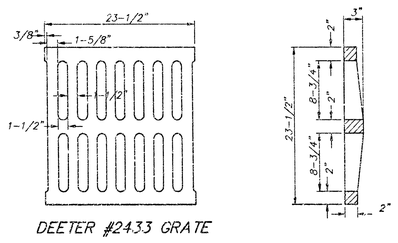

24" x 24" FRAME & GRATE DETAIL

NOTE: Grates shall be imprinted on the top surface with "CITY OF WICHITA" using letters at least 1" in height. Other marking methods may be approved by the engineer.

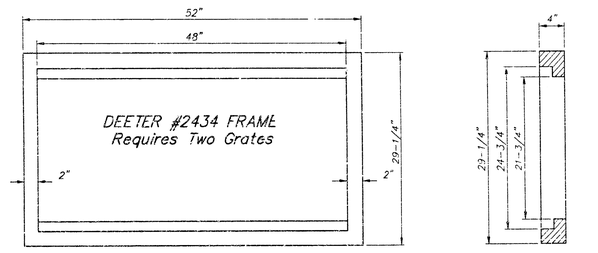

DOUBLE 24" X 24" FRAME DETAIL

PROJECT NUMBER	SHEET NAME	ENGINEERING DIRECTORY
1428 PPS (607861)	Details	F:\Boyd\Land\dwg

DESIGN	DRAWN	APPROVED	DATE	SCALE	BAUGHMAN NO
TVP	TVP	JFB	March 2004	None	03-12-E769

STONEHEDGE 3RD ADDITION
RCBC CONNECTION, WEIR SECTION, & DROP INLET DETAILS
55th STREET NORTH AND ROCK ROAD

BAUGHMAN COMPANY, P.A.
ENGINEERING, SURVEYING, & PLANNING
316-262-7271 • 315 ELLIS • WICHITA, KANSAS 67211

SHEET 7 OF 17

NOTE:

PRE-CAST MANUFACTURER TO PROVIDE REINFORCEMENTS FOR CONNECTION TO CAST IN PLACE SECTION.

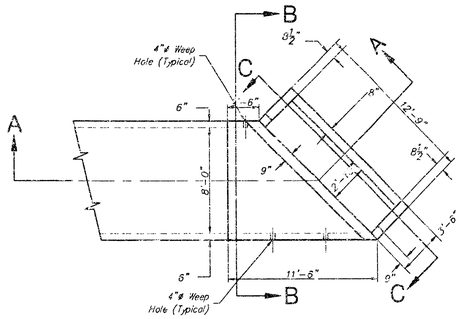

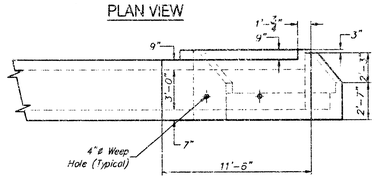

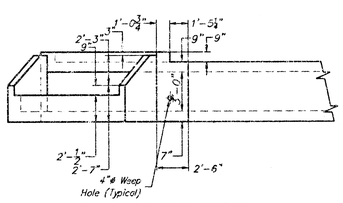

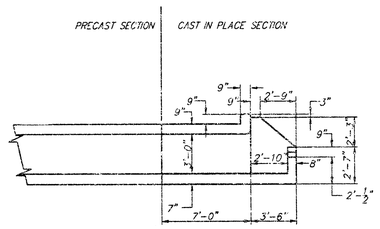

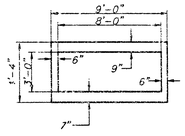

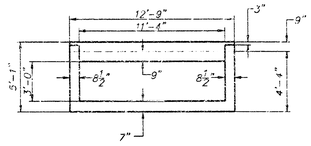

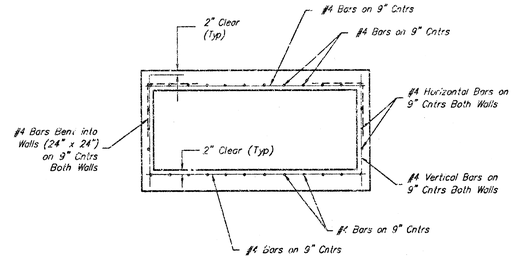

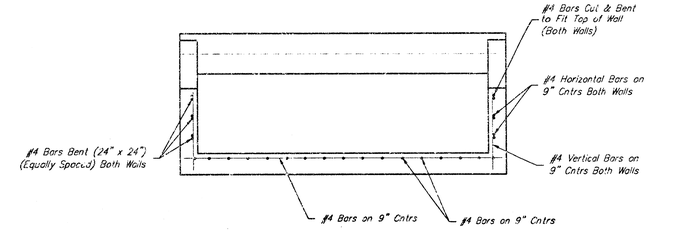

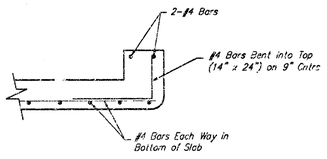

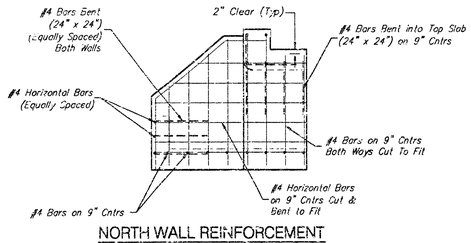

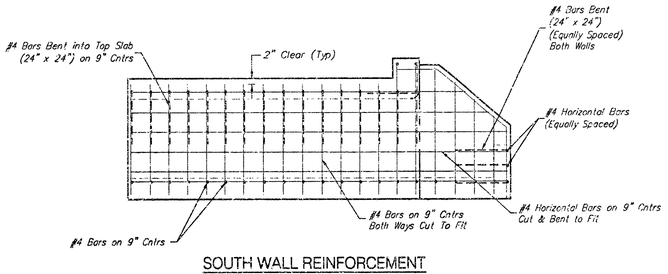

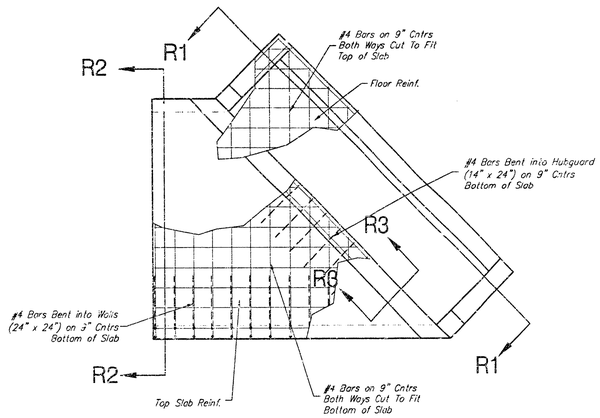

PROJECT NUMBER	SHEET NAME	ENGINEERING DIRECTORY
1428 PPS (607861)	Weir Details	F:\\Boyd\Land\dwg

DESIGN	DRAWN	APPROVED	DATE	SCALE	BAUGHMAN NO
KK	TA	JFB	March 2004	None	03-12-E769

STONEHEDGE 3RD ADDITION

WEIR SECTION DETAILS

35th STREET NORTH AND ROCK ROAD

BAUGHMAN COMPANY, P.A.
ENGINEERING, SURVEYING, & PLANNING
316-262-7271 • 315 ELLIS • WICHITA, KANSAS 67211

SHEET 7a OF 17

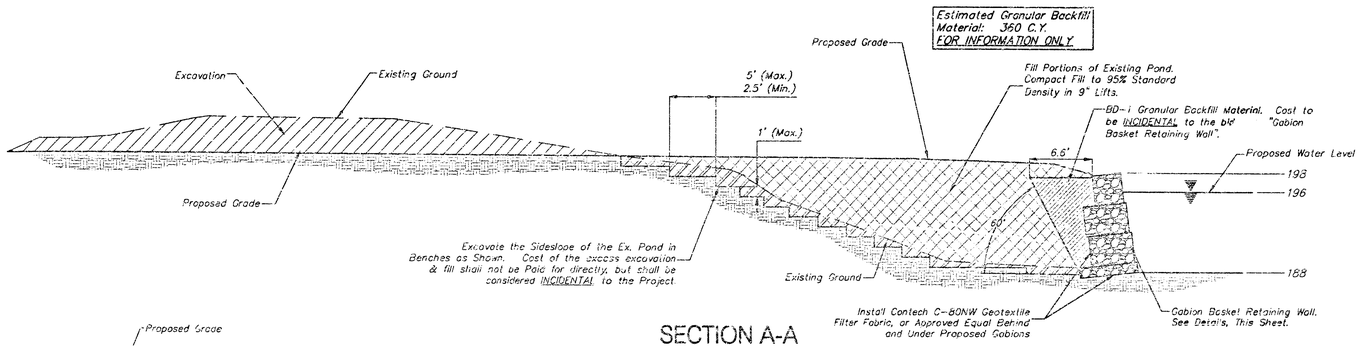

SECTION A-A

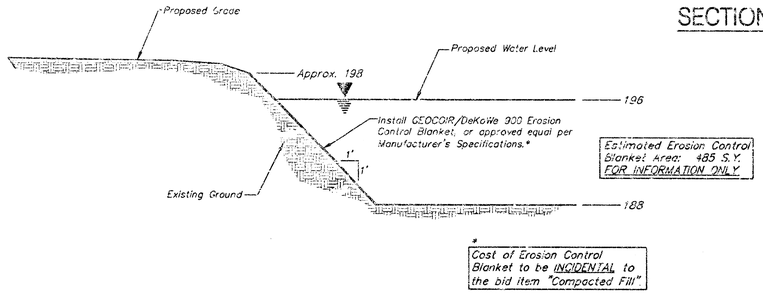

SECTION B-B

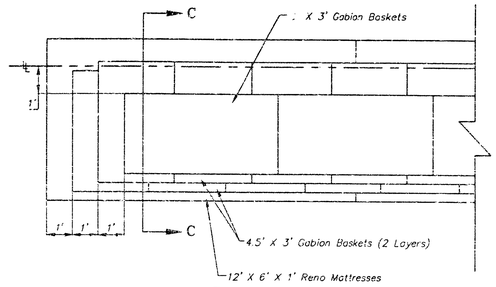

Plan View

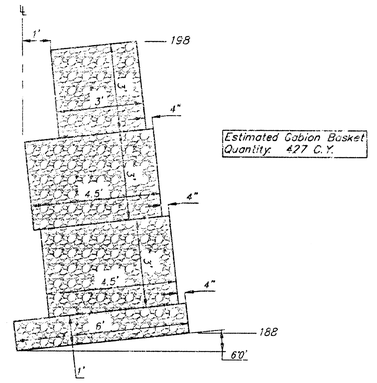

Section C-C

GABION DETAILS

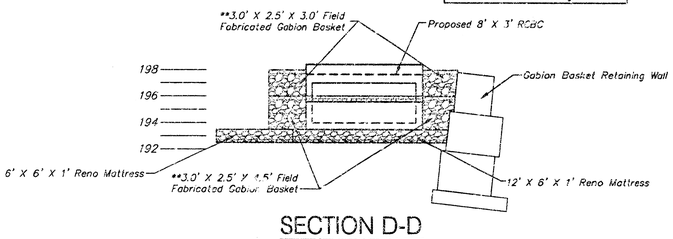

SECTION D-D

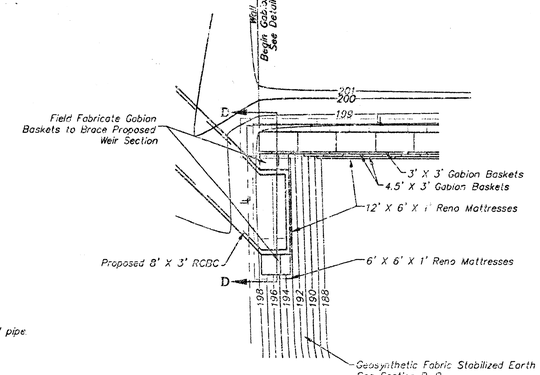

GABION BASKET WALL DETAIL

Wall Sta. 0+00.00

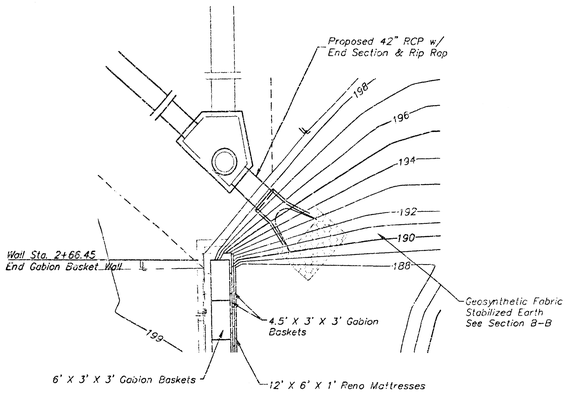

GABION BASKET WALL DETAIL

Wall Sta. 2+66.45

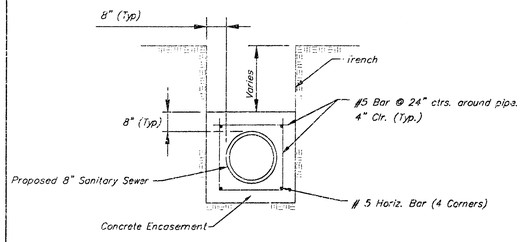

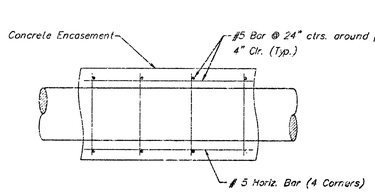

SANITARY SEWER CONCRETE ENCASEMENT

PROJECT NUMBER			SHEET NAME	ENGINEERING DIRECTORY
1428 PPS (07861)			Details	F:\Boyd\Landydwg
DESIGN	DRAWN	APPROVED	DATE	SCALE	BAUGHMAN NO
TVP	TVP	JFB	March 2004	None	03-12-E769

STONEHEDGE 3RD ADDITION
POND, GABION, AND SANITARY SEWER ENCASEMENT DETAILS
39th STREET NORTH AND ROCK ROAD

BAUGHMAN COMPANY, P.A.
ENGINEERING, SURVEYING, & PLANNING
316-262-7271 • 315 ELLIS • WICHITA KANSAS 67211

SHEET 8 OF 17

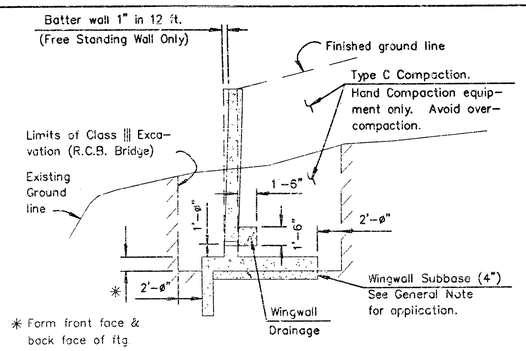

SECTION THRU WINGWALL

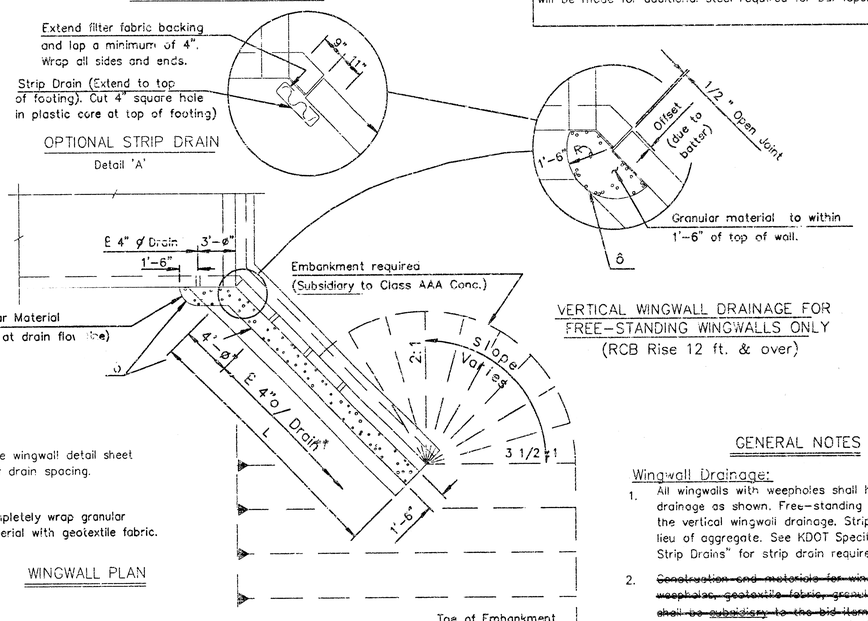

VERTICAL WINGWALL DRAINAGE FOR FREE-STANDING WINGWALLS ONLY
(RCB Rise 12 ft. & over)

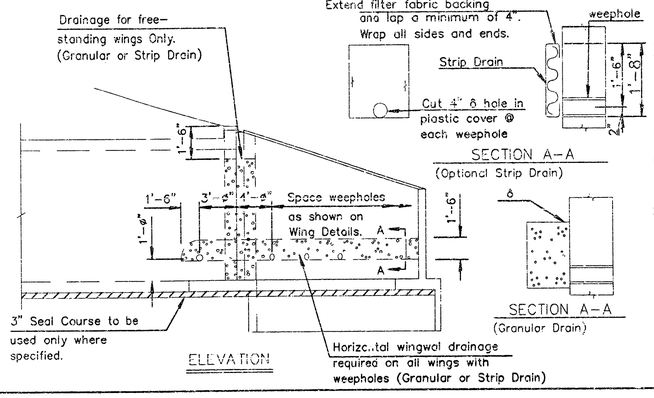

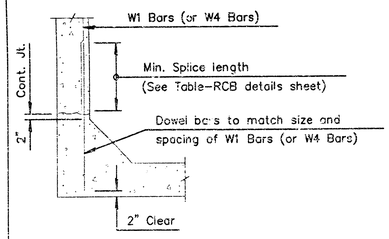

OPTIONAL BAR DETAIL

The Contractor shall have the option of using Dowel Bars to match vertical wall bars as shown, however no allowance will be made for additional steel required for bar laps.

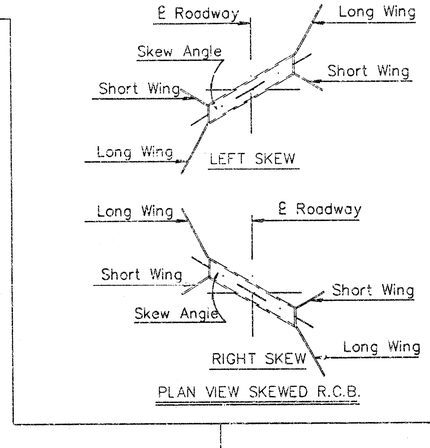

Ø Longitudinal bars shall extend through the joint to provide a minumum lap equal to the required splice length.
See RCB Details Sh. for required splice length.

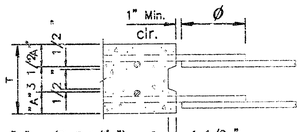

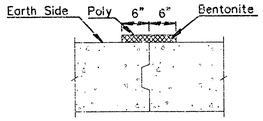

VERTICAL CONSTRUCTION JOINTS

NOTE: Vertical construction joints shall be perpendicular to the longitudinal axis of the RCB and shall be placed at any location as needed for construction and as approved by the Engineer.

NOTE: Horizontal construction joints shall be a roughened finish.

NOTE: Barrel Construction Joints located in a median with less than 5 ft. of fill or at locations specified by the Engineer, shall be protected by a bentonite based system as shown. Place the bentonite on the exterior walls and top slab. See requirements for bentonite in the KDOT Specifications for "Bridge Backwall Protection System". ~~Material and installation of the bentonite system shall be subsidiary to the bid item "Class AAA Concrete".~~

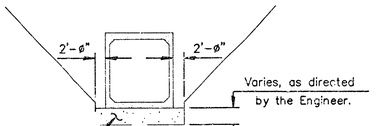

SECTION

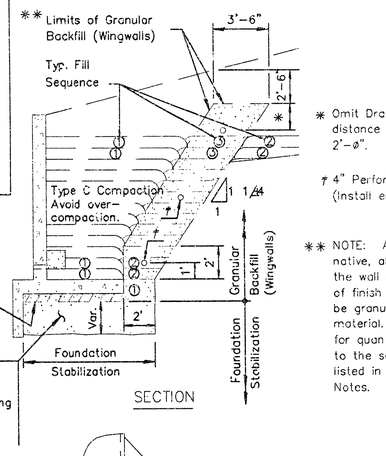

SECTION

* Omit Drain Pipe when distance is less than 2'-ø".

† 4" Perforated Pipe (Install ea. 4' in Elev.)

** NOTE: As an alternative, all backfill for the wall (within 2'-6" of finish grade) may be granular backfill material. Measurement for quantity shall be to the same limits as listed in the General Notes.

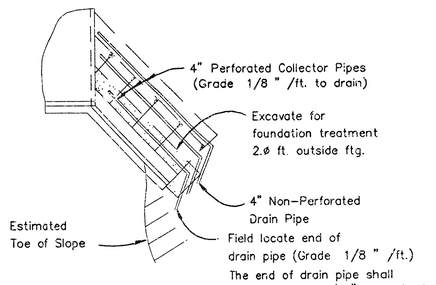

PLAN

GRANULAR BACKFILL AND FOUNDATION STABILIZATION

GENERAL NOTES

Wingwall Drainage:

1. All wingwalls with weepholes shall have horizontal wingwall drainage as shown. Free-standing wingwalls shall also have the vertical wingwall drainage. Strip drains may be used in lieu of aggregate. See KDOT Specifications for "Abutment Strip Drains" for strip drain requirements.
2. ~~Construction and materials for wingwall drainage, including weepholes, geotextile fabric, granular material, and strip drain shall be subsidiary to the bid item, "Class AAA Concrete".~~ Granular material for wingwall drainage shall conform to the requirements of UD-1. Weepholes may be a formed opening or corrugated polyethylene tubing.

Wingwall Subbase:

1. Wingwall subbase shall be constructed at all wingwall footings to assure the assumed coefficient of friction between the concrete footing and the foundation, with the following exceptions;

a) Wingwall subbase will not be required for footings on RCB's 6 feet or less in height unless otherwise determined by the Engineer.
b) The subbase will also not be required for footings founded on rock or clean, granular material as determined by the Engineer.

2. Subbase shall consist of 4" compacted granular material consisting of commercial grade clean sand or UD-1 material. ~~All excavation, material and labor necessary to construct the wingwall subbase shall be subsidiary to "Class AAA Concrete".~~

Seal Course:

1. Seal Course consisting of 3" min. of Commercial Grade Concrete shall be constructed to the limits directed by the Engineer. No reinforcing in the floor of the slab or wall footing shall be placed until the Seal Course has gained sufficient strength to permit working upon it without injury.

GENERAL NOTES

Foundation Stabilization:

1. At sites where the wingwall footing or culvert floor is located within the limits of an existing streambed or is founded on unsuitable material, the Engineer will determine the depth of Foundation Stabilization.
2. Foundation Stabilization may be required under the box and/or wingwalls as directed by the Engineer. ~~The granular material placed for foundation stabilization shall be measured and paid for at the contract price per cubic yard for "Foundation Stabilization".~~ Material for Foundation Stabilization shall be suitable backfill material as approved by the Engineer. ~~The excavation for the placement of granular material shall be subsidiary to the bid item, "Foundation Stabilization".~~

Granular Backfill (Wingwalls):

1. In locations where the material behind the wingwall consist of soils judged as high plasticity clays, fat clays, expansive clays or organic clays, Granular Backfill (Wingwalls) shall be used. Granular Backfill construction may be used separately or combined with Foundation Stabilization as directed by the Engineer.
2. ~~Measurement for the bid item, "Granular Backfill (Wingwalls)", shall be measured in Cubic Yards to the theoretical limits as shown. Drainage pipe, rodent screens, and excavation shall be subsidiary to the bid item, "Granular Backfill (Wingwalls)".~~
3. Material for Granular Backfill (Wingwalls) shall conform to the requirements of UD-1 or BD-1. Drainage Pipe shall be corrugated polyethylene tubing conforming to KDOT Specifications.

NO.	DATE	REVISIONS	BY	APP'D
3	3-28-97	Wrap granular drains	RAM	KFH
2	9-20-96	Strip drain & bentonite at joint	RAM	KFH
1	10-2-91	Change drainage details	RAM	KFH

KANSAS DEPARTMENT OF TRANSPORTATION

RCB AUXILIARY DETAILS

~~BR0-20~~ 9/17

FHWA APPROVAL		3-31-97 APP'D		KENNETH F. HURST	
DESIGNED	RAM	DETAILED	RDR	QUANTITIES	TRACED
DESIGN CK.	RRR	DETAIL CK.	RRR	QUAN.CK.	TRACE CK.

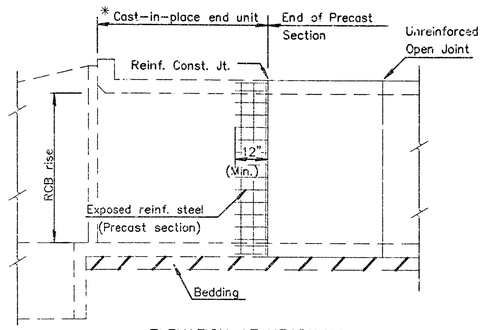

ELEVATION AT HEADWALL

* Minimum barrel length of cast-in-place end unit shall equal the RCB rise or 8'-ø", whichever is less. This length can be used when the joint between the cast-in-place end unit and the pre-cast section is reinforced as shown.

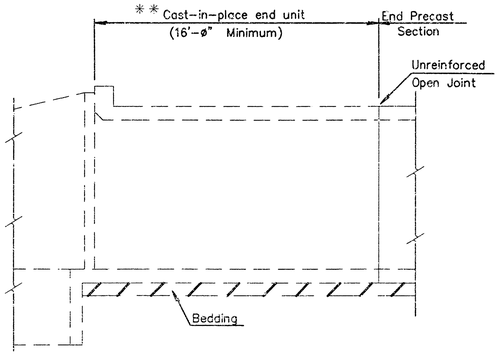

ELEVATION AT HEADWALL

** Minimum barrel length of cast-in-place end unit shall be 16'-ø" when using an unreinforced open joint at the end of the precast section.

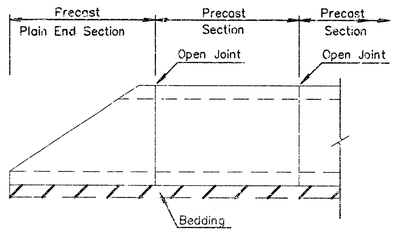

ELEVATION AT PRECAST END SECTION

(Precast End Sections are permitted where straight wings are shown in the plans or at the downstream end for single cell RCB with a rise of six feet or less.)

GENERAL NOTES

PRECAST BOX CULVERTS: If precast boxes are specified, construct them at the locations shown in the plans and according to the requirement shown on this sheet. When approved by the Engineer, precast box culverts may be used in lieu of cast-in-place box culverts. If the Contractor chooses the precast option, use the cast-in-place quantities as the cost basis. This cost includes all labor equipment, material and incidentals necessary to complete the installation.

Unless otherwise approved by the Engineer, use cast-in-place collars at horizontal and vertical changes in RCB alignment. Use cast-in-place end sections and wingwalls except as noted on this sheet. The Engineer may require cast-in-place sections at junctions of drainage structures.

Cast-in-place concrete work shall conform to the requirements of the KDOT Specifications and KDOT's "Guidelines for Structural Design and Detail of Reinforced Concrete Box Culverts'. Use Class AAA concrete and Grade 60 reinforcing steel conforming to ASTM A615M for cast-in-place construction.

SPECIFICATIONS: Single-cell Precast Concrete Box Culverts shall conform to the requirements of the following specifications except as noted in the KDOT Specifications. Design multiple-cell precast boxes in accordance with the criteria used to develop the single-cell precast boxes. (See Appendix of ASTM Specification C 1433, Table 2 and the latest AASHTO Specifications.)

DISTRIBUTION SLAB: Fill heights less than 2 feet require a distribution slab. Precast distribution slabs may be used for fill heights over 1 foot, otherwise use cast-in-place.

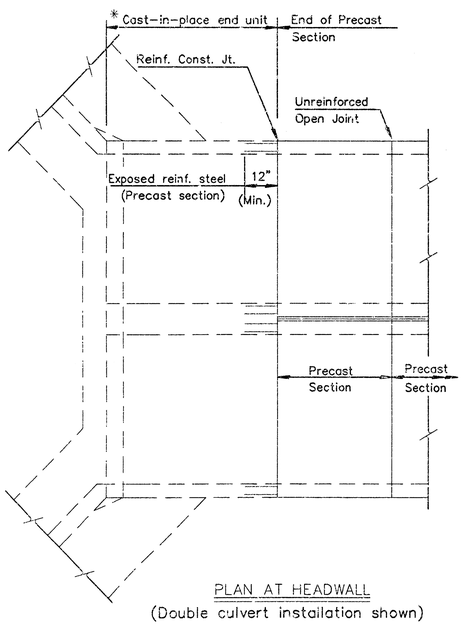

PLAN AT HEADWALL

(Double culvert installation shown)

NOTE: See "Bridge Excavation" sheet, (Std. No. BR1ø), for excavation details and basis of payment.

NOTE: Minimum length of precast section shall be 4'-ø".

NOTE: A single cell box of equivalent area may be substituted for a double cell box with cell spans less than or equal to 6'-ø". Two single cell boxes may be substituted for a double cell box, when approved by the Engineer.

NOTE: See respective RCB Standard Sheets for cast-in-place details.

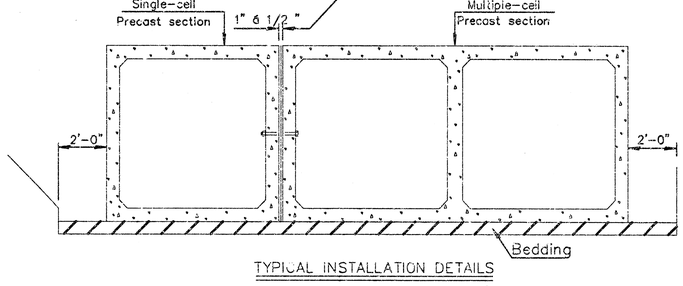

TYPICAL INSTALLATION DETAILS

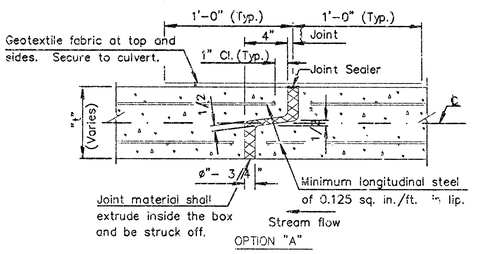

OPTION "A"

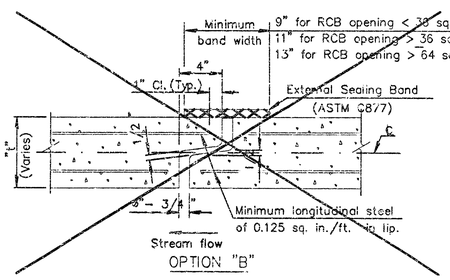

OPTION "B"

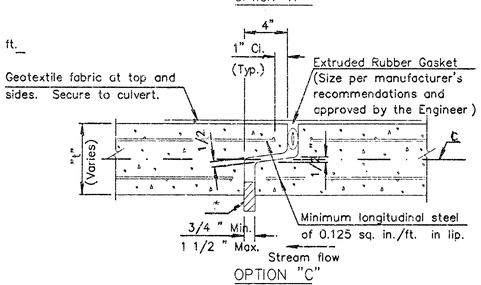

OPTION "C"

OPEN JOINT DETAIL

* Insert temporary, 3/4 "-1" wide, hardwood wedges to prevent over-compressing gasket.

NO.	DATE	REVISIONS	BY	APP'D
4	11-03-00	Revised ASTM / Added Note	RAM	KFH
3	12-20-96	Revised CIP end unit details	RAM	KFH
2	1-17-95	Revised general notes	LRR	KFH
1	6-22-94	Added option 'C' & revised notes	RAM	KFH

KANSAS DEPARTMENT OF TRANSPORTATION

PRECAST CONCRETE BOX CULVERT DETAILS

~~BR031~~ 10/17

FHWA APPROVAL	11-27-00	APP'D	KENNETH F. HURST	
DESIGNED	DETAILED PF	QUANTITIES	CADD	
DESIGN CK.	DETAIL CK. RAM	QUAN. CK.	CADD CK.	

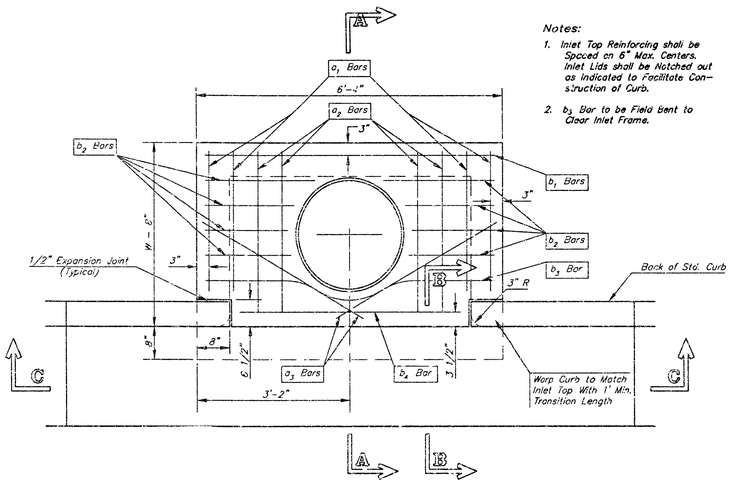

PLAN

Notes:

1. Inlet Top Reinforcing shall be Spaced on 6" Max. Centers. Inlet Lids shall be Notched out as Indicated to Facilitate Construction of Curb.
2. b_1 Bar to be Field Bent to Clear Inlet Frame.

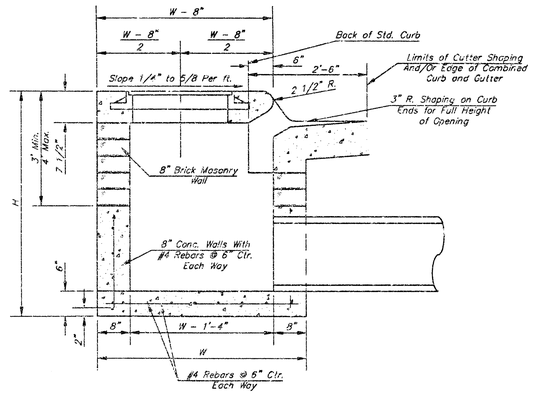

SECTION A–A

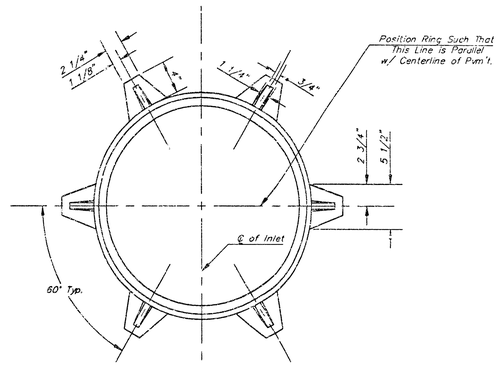

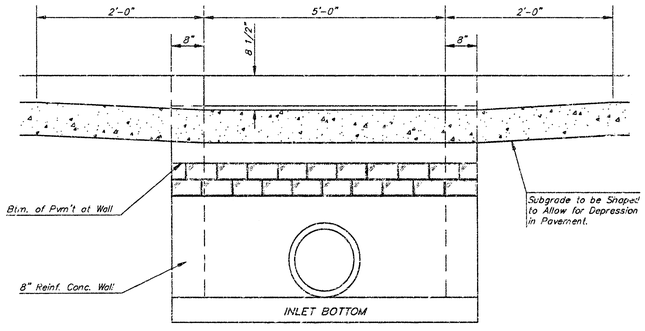

SECTION C–C

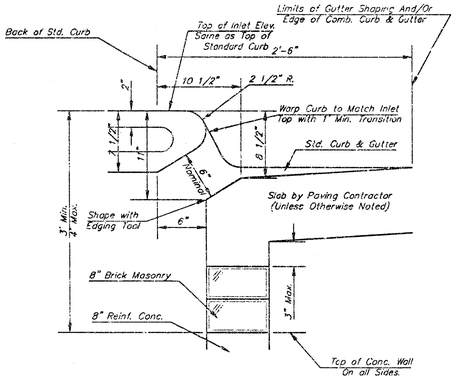

SECTION B–B

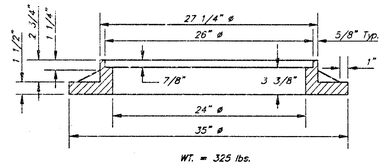

WT. = 325 lbs.

MANHOLE RING AND COVER

*See City of Wichita Standard Manhole Ring and Cover Detail Sheet for Cover Details to Be Used With Inlet Frame.

STEEL SCHEDULE

BAR		a_1	a_2	a_3	b_1 W=4'-4"	b_1 W=5'-4"	b_1 W=6'-4"	b_1 W=7'-4"	b_1 W=8'-4"	b_2	b_3	b_4	Wt. Lbs.
NUMBER		4	4	2	1	3	5	7	9	6	1	1	
SIZE		#4	#4	#4	#4	#4	#4	#4	#4	#4	#4	#6	
LENGTH	W=4'-4"	5'-7"	6'-7"	4'-0"	6'-1"	–	–	–	–	1'-9"	6'-2"	4'-8"	60±
	W=5'-4"	7'-7"	8'-7"	5'-0"	–	6'-1"	–	–	–	1'-9"	6'-2"	4'-8"	81±
	W=6'-4"	9'-7"	10'-7"	6'-0"	–	–	6'-1"	–	–	1'-9"	6'-2"	4'-8"	101±
	W=7'-4"	11'-7"	12'-7"	7'-0"	–	–	–	6'-1"	–	1'-9"	6'-2"	4'-8"	121±
	W=8'-4"	13'-7"	14'-7"	8'-0"	–	–	–	–	6'-1"	1'-9"	6'-2"	4'-8"	141±

Note: a_2 Bars to be Placed Approx. 2" Below Top of Inlet Cover.

STANDARD CURB INLET PRECAST TOPS

W	PRE-CAST TOP SIZE	PIPE SIZE	CU. YD. CONC.
4'-4"	5'-8" 6'-4" 7 1/2"	21" & SMALLER	0.38±
5'-4"	4'-8" 6'-4" 7 1/2"	24" & 30"	0.51±
6'-4"	5'-8" 6'-4" 7 1/2"	35" & 42"	0.64±
7'-4"	6'-8" 6'-4" 7 1/2"	48" & 54"	0.77±
8'-4"	7'-8" 6'-4" 7 1/2"	60" & 66"	0.90±

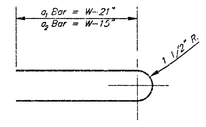

BENDING DIAGRAM

GENERAL NOTES

1. Concrete tops to be installed on thin mortar cushion to insure full support along brick walls. Concrete tops may be cast in place or precast. Concrete used for inlet construction shall be concrete pavement mix.
2. Contractor shall have the option of constructing 8" brick masonry walls between the concrete inlet base and top on this inlet when W=6'-4" and H=7'-0" or less.
3. Inlet invert shall be shaped with 8 sack sand mix concrete to create flow channels and to increase hydraulic efficiency such that the inlet will be self cleaning between all inlet and/or outlet pipes.
4. The ends of all pipes installed in inlets shall be cut off flush with the inside face of the inlet wall.

PROJECT NUMBER			SHEET NAME	ENGINEERING DIRECTORY
			STyp1-8	P:\\Boyd\Details
DESIGN	DRAWN	APPROVED	DATE	SCALE	BAUGHMAN NO
	STAFF	JFB	March 2004	None	03-12-E769

STONEHEDGE 3RD ADDITION
STANDARD DETAILS for SINGLE TYPE 1 CURB INLET
35TH STREET NORTH AND ROCK ROAD

BAUGHMAN COMPANY, P.A.
ENGINEERING, SURVEYING, & PLANNING
316-262-7271 • 315 ELLIS • WICHITA, KANSAS 67211

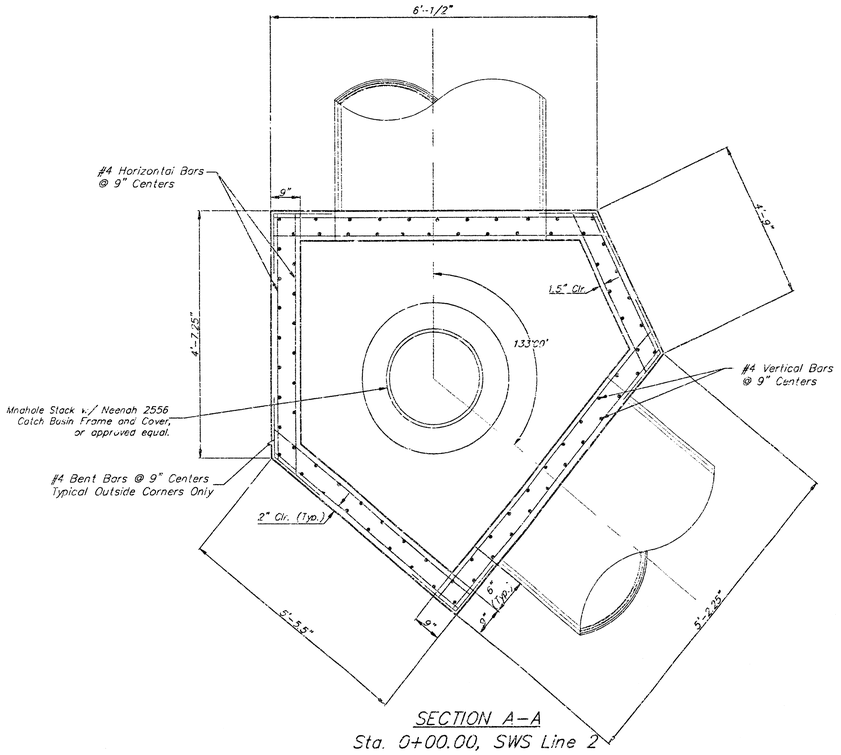

SECTION A-A

Sta. 0+00.00, SWS Line 2

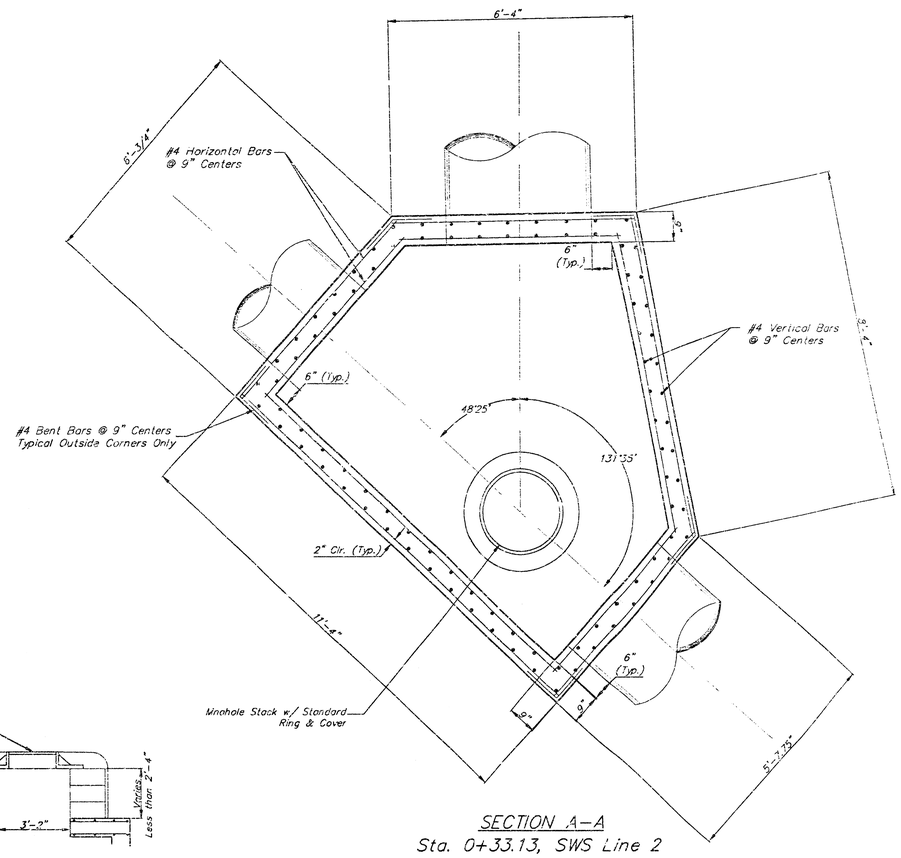

SECTION A-A

Sta. 0+33.13, SWS Line 2

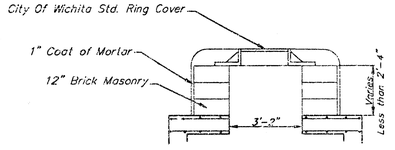

MANHOLE STACK LESS THAN 2.33'

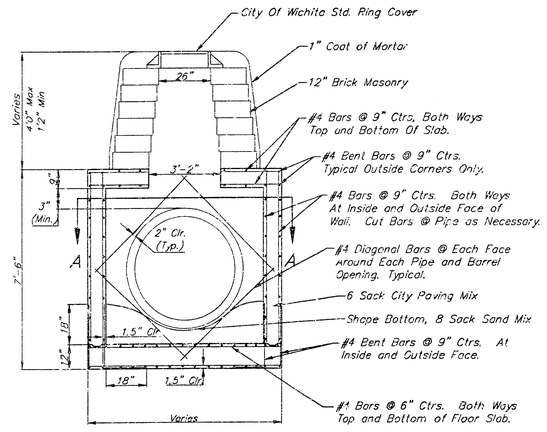

REINFORCED CONCRETE MANHOLE

STACK 2.33' TO 4'0"

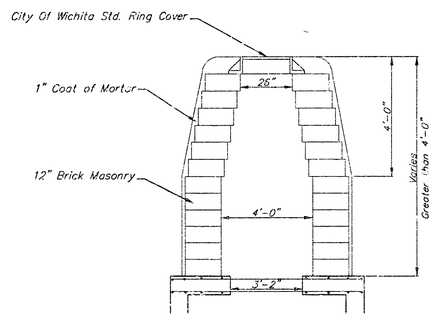

MANHOLE STACK OVER 4'0"

GENERAL NOTES:

1. MORTAR USED IN MASONRY CONSTRUCTION SHALL CONTAIN 8 SACKS OF CEMENT PER CUBIC YARD. CONCRETE USED IN MANHOLE WALLS AND BASES SHALL CONFORM TO THE REQUIREMENTS FOR CONCRETE PAVEMENT CONSTRUCTION AS SPECIFIED IN THE CITY STANDARD PAVING SPECIFICATIONS, USING CITY CONCRETE PAVEMENT MIX WITHOUT AIR ENTRAINING ADMIXTURE. MORTAR SHALL BE PLACED AROUND THE MANHOLE RING AS SHOWN ON THE DRAWINGS WHEN MANHOLES ARE CONSTRUCTED IN UNPAVED AREAS. COMPLETED MANHOLE SHALL BE WITHOUT LEAKS AND WATER TIGHT.

2. THE FLOORS OF ALL MANHOLES SHALL BE SHAPED WITH FLOW CHANNELS SUCH THAT THE MANHOLES WILL BE SELF CLEANING. USING 8-SACK SAND MIX CONCRETE. FLOW CHANNELS SHALL BE FORMED TO MATCH THE BOTTOM HALVES OF THE INFLOWING PIPES AND THE OUTFLOWING PIPE. MANHOLE FLOORS SHALL HAVE SLOPES OF 3 INCHES PER FOOT IN THE AREAS OUTSIDE OF THE FLOW CHANNELS SLOPED TOWARD THE FLOW CHANNELS.

3. MANHOLE COVER CASTINGS AND MANHOLE FRAME CASTINGS SHALL CONFORM TO THE REQUIREMENTS AS INDICATED IN THE STANDARD SPECIFICATIONS.

4. THE ENDS OF ALL PIPES IN MANHOLES SHALL BE CUT OFF FLUSH WITH THE INSIDE FACE OF MANHOLE WALL.

PROJECT NUMBER			SHEET NAME	ENGINEERING DIRECTORY
			RCMHDET	F:\Boyd\Details
DESIGN	DRAWN	APPROVED	DATE	SCALE	BAUGHMAN NO
	STAFF	JFB	March 2004	None	03-12-E769

STONEHEDGE 3RD ADDITION

STANDARD DETAILS for REINFORCED CONCRETE MANHOLES

35TH STREET NORTH AND HOCK ROAD

BAUGHMAN COMPANY, P.A.
ENGINEERING, SURVEYING, & PLANNING
316-262-7271 • 315 E.IJB • WICHITA, KANSAS 67211

SHEET 12 OF 17

SEWER APPURTENANCES DETAILS

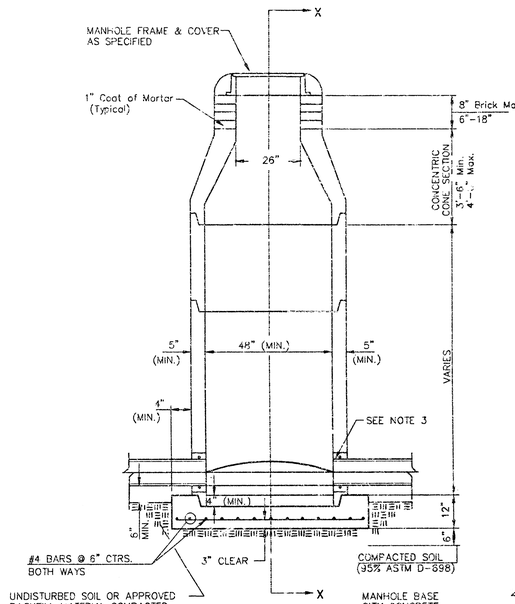

TYPE P
STANDARD MANHOLE

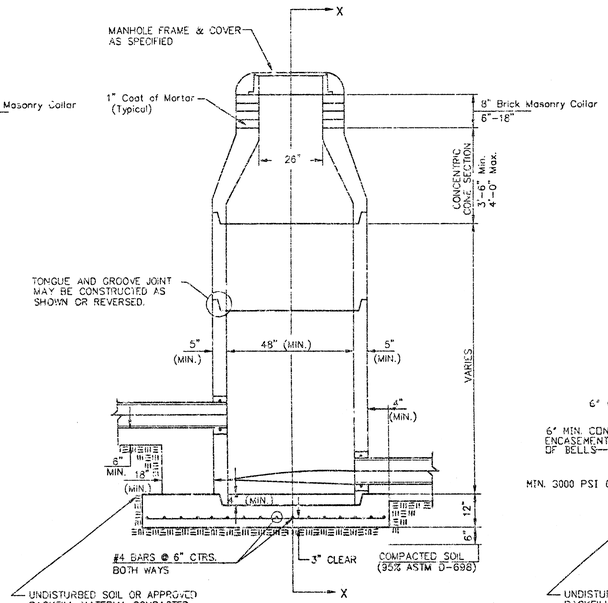

TYPE P
INSIDE DROP MANHOLE

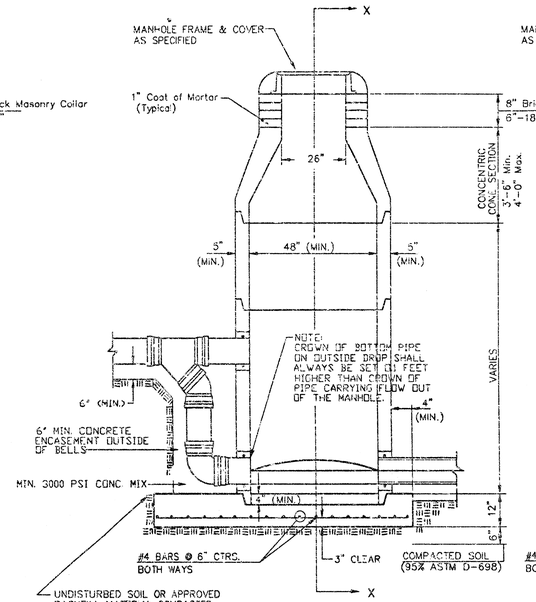

TYPE P
OUTSIDE DROP MANHOLE

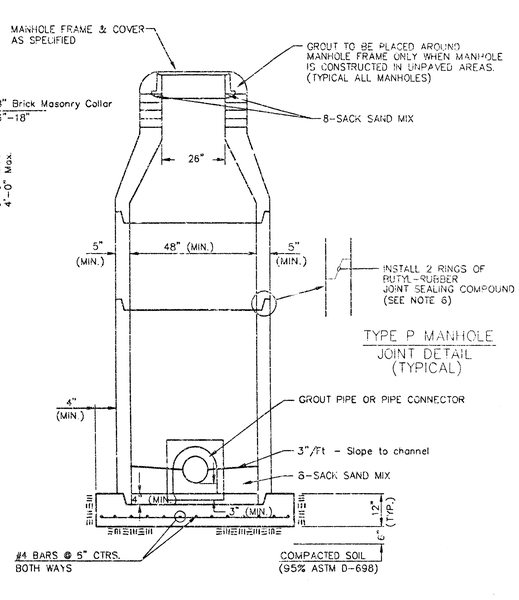

SECTION X
(TYPICAL)

GENERAL NOTES

PRECAST MANHOLE NOTES

1. ALL PRECAST CONCRETE MANHOLE SECTIONS SHALL CONFORM TO THE LATEST REVISIONS OF A.S.T.M. C478 AS MODIFIED BY THE SPECIFICATIONS.
2. NON-SHRINK GROUT SHALL BE NON-METALLIC TYPE.
3. APPROVED FLEXIBLE WATERSTOP GASKETS SHALL BE INSTALLED TO JOIN THE SEWER TO THE MANHOLE WALL WHEN A.B.S. COMPOSITE PIPE OR P.V.C. PIPE IS USED. FOR OTHER TYPES OF PIPE THE SEWER SHALL BE GROUTED IN PLACE WITH NON-SHRINK GROUT. THE SEWER PIPE SHALL BE SUPPORTED WITH CONCRETE ENCASEMENT A MINIMUM OF 3 FEET FROM THE MANHOLE WALL AND TO THE FIRST JOINT FOR V.C.P. SUCH THAT THE JOINT REMAINS FLEXIBLE.
4. ALL INSIDE SURFACES OF THE CONCRETE MANHOLE WHICH WOULD BE EXPOSED TO SEWER GAS SHALL BE COATED WITH 2 COATS TNEMEC SERIES 66 HI-BUILD EPOXOLINE, DRY THICKNESS OF 8 MILS (MIN.)
5. EXTERIOR MANHOLE WALLS SHALL BE COATED WITH ! COAT MOBILARMA 633 BITUMINOUS COATING.
6. JOINT SEALING COMPOUND SHALL BE KENT SEAL NO. 2 OR APPROVED EQUAL.
7. PRECAST MANHOLES SHALL BE SET AT LEAST 4 INCHES INTO THE MANHOLE BASE.
8. TOP OF MANHOLE FLOOR SLAB SHALL BE AT LEAST 3 INCHES BELOW THE FLOW LINE OF THE OUTLET PIPE TO INSURE SUFFICIENT MINIMUM THICKNESS OF SHAPED INVERT.
9. LIFTING HOLES SHALL BE FILLED WITH NON-SHRINK GROUT AND THE INTERIOR SURFACE COATED AS SPECIFIED.
10. MORTAR USED IN MASONRY CONSTRUCTION SHALL CONTAIN 8 SACKS OF CEMENT PER CUBIC YARD. CONCRETE USED IN MANHOLE BASES SHALL CONFORM TO THE REQUIREMENTS OF CONCRETE FOR CONCRETE PAVEMENT CONSTRUCTION AS SPECIFIED IN THE CITY STANDARD PAVING SPECIFICATIONS USING CITY CONCRETE PAVEMENT MIX WITHOUT AIR ENTRAINING ADMIXTURE. MORTAR SHALL BE PLACED AROUND THE MANHOLE RING AS SHOWN ON THE DRAWINGS WHEN MANHOLES ARE CONSTRUCTED IN UNPAVED AREAS. MANHOLES CONSTRUCTED WHERE PIPE SIZES ARE SMALLER THAN 24" SHALL HAVE AN INSIDE DIAMETER OF 4'. MANHOLES CONSTRUCTED WHERE PIPE SIZES ARE 24" OR LARGER SHALL HAVE AN INSIDE DIAMETER OF 5'. COMPLETED MANHOLE SHALL BE WITHOUT LEAKS AND WATER TIGHT.
11. REINFORCING STEEL SHALL BE INSTALLED IN THE MANHOLE BASES AND SHALL CONSIST OF NO. 4 BARS PLACED ON 6" CENTERS IN BOTH DIRECTIONS. THE MANHOLE BASE REINFORCEMENT SHALL BE PLACED AT LEAST 3" ABOVE THE BOTTOM OF THE MANHOLE BASE. ALL COSTS FOR FURNISHING AND INSTALLING REINFORCING STEEL SHALL BE INCLUDED IN THE UNIT PRICE BID FOR THE MANHOLE.
12. OPENINGS SHALL BE CUT INTO THE MANHOLE WALL WHEN OUTSIDE DROPS ARE CONSTRUCTED ON EXISTING MANHOLES. SUCH OPENINGS CUT INTO EXISTING MANHOLES SHALL BE AS SMALL AS PRACTICAL TO FACILITATE INSTALLING AND GROUTING THE NEW PIPE IN PLACE. WATERSTOP GASKETS SHALL BE USED WITH P.V.C. AND A.B.S. COMPOSITE PIPE. THE NEW PIPE SHALL BE GROUTED INTO THE OPENING USING AN APPROVED NON-SHRINK GROUT FOR THE FULL MANHOLE WALL THICKNESS. THE EXTERIOR OF THE COMPLETED CONNECTION SHALL BE SEALED WITH AN APPROVED BITUMINOUS COATING SUCH THAT THE CONNECTION WILL BE WATER TIGHT. FLOOR OF MANHOLE SHALL BE MODIFIED TO FORM NEW FLOW CHANNEL FOR THE NEW CONNECTION AS INDICATED BY THE DRAWING. THIS WORK, INCLUDING MODIFICATION OF MANHOLE FLOOR, SHALL BE PAID FOR AT THE UNIT PRICE BID FOR OUTSIDE DROP STACK CONSTRUCTED ON EXISTING MANHOLE.
13. THE FLOORS OF ALL MANHOLES SHALL BE SHAPED WITH FLOW CHANNELS SUCH THAT THE MANHOLES WILL BE SELF CLEANING AND FREE OF AREAS WHERE SOLIDS COULD BE DEPOSITED AS SEWAGE FLOWS THROUGH THE MANHOLE FROM ALL INLET PIPES TO THE OUTLET PIPE. FLOW CHANNELS SHALL BE FORMED TO MATCH THE BOTTOM HALVES OF THE INFLOWING PIPES AND THE OUTFLOWING PIPE AS SHOWN BY THE DRAWINGS EXCEPT FOR INSIDE DROP MANHOLES. FLOW CHANNELS FOR INSIDE DROP MANHOLES SHALL BE CONSTRUCTED AS INDICATED BY THE DRAWING. MANHOLE FLOORS SHALL HAVE SLOPES OF 3 INCHES PER FOOT IN THE AREAS OUTSIDE OF THE FLOW CHANNELS SLOPED TOWARD THE FLOW CHANNELS. PIPES LAID THROUGH MANHOLES SHALL HAVE THE TOP HALF REMOVED TO NEAT LINES FOR THE FULL INSIDE DIAMETER OF THE MANHOLE. MANHOLE FLOORS SHALL THEN BE SHAPED AROUND THE BOTTOM HALF OF THE PIPE WHICH FORMS THE FLOW CHANNEL.
14. PIPES INSTALLED WITHIN THE EXCAVATION MADE FOR THE MANHOLE SHALL BE CRADLED WITH CONCRETE TO THE LIMITS OF THE MANHOLE EXCAVATION. WHEN CLAY PIPE IS USED, THE CRADLE SHALL EXTEND TO THE FIRST JOINT OUTSIDE THE MANHOLE. THE CRADLE SHALL BE TERMINATED AT THE CLAY PIPE JOINT IN A MANNER WHICH WILL MAINTAIN THE FLEXIBILITY OF THE JOINT. COST OF CRADLE WITHIN MANHOLE EXCAVATION OR TO CLAY PIPE JOINTS ADJACENT TO MANHOLE SHALL BE INCLUDED IN THE UNIT PRICE BID FOR THE MANHOLE.
15. MANHOLE COVER CASTINGS AND MANHOLE FRAME CASTINGS SHALL CONFORM TO THE REQUIREMENTS AS INDICATED IN THE STANDARD SPECIFICATIONS AND AS SHOWN IN THE STANDARD DETAIL DRAWING.
16. THE VERTICAL DROP IN INSIDE DROP MANHOLES SHALL NOT EXCEED 2' FOR INFLOWING PIPES SIZED 12" OR SMALLER AND 2' FOR INFLOWING PIPES LARGER THAN 12". THE CROWNS OF INFLOWING PIPES SHALL NEVER BE SET LOWER THAN THE CROWN OF THE OUTFLOWING PIPE.
17. STANDARD MANHOLES AND STANDARD INSIDE DROP MANHOLES SHALL BE BID AS STANDARD MANHOLES FOR THE TYPE AND DIAMETER INDICATED. OUTSIDE DROP MANHOLES SHALL BE BID AS STANDARD OUTSIDE DROP MANHOLES FOR THE TYPE AND DIAMETER INDICATED. ALL MANHOLE DIAMETERS WILL BE 4' UNLESS INDICATED OTHERWISE.
18. A BRICK MASONRY COLLAR SHALL BE INSTALLED BETWEEN THE CAST IRON FRAME AND THE CONCENTRIC CONE. THE COLLAR WILL HAVE 6" WALLS AND A VERTICAL HEIGHT OF 6" MINIMUM AND 18" MAXIMUM. A 1" COAT OF MORTAR WILL BE PLASTERED ON THE OUTSIDE OF THE COLLAR. THE USE OF PRE-CAST CONCRETE SPACERS FOR MANHOLE TOP ADJUSTMENT IS ALSO ALLOWED.

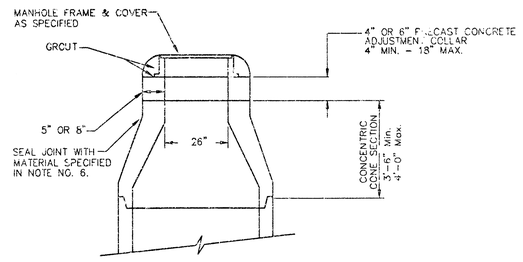

ALTERNATE CONSTRUCTION
IN UNPAVED AREAS

PROJECT NUMBER			SHEET NAME	ENGINEERING DIRECTORY
			PMH	F:\Boyd\Details
DESIGN	DRAWN	APPROVED	DATE	SCALE	BAUGHMAN NO
STAFF	STAFF	JFB	March 2004	None	03-12-E769

STONEHEDGE 3RD ADDITION
STANDARD DETAILS for MANHOLES & SEWER APPURTENANCES
35TH STREET NORTH & ROCK ROAD

BAUGHMAN COMPANY, P.A.
ENGINEERING, SURVEYING, & PLANNING
316-262-7271 • 315 EUS • WICHITA, KANSAS 67211

SHEET 13 OF 17

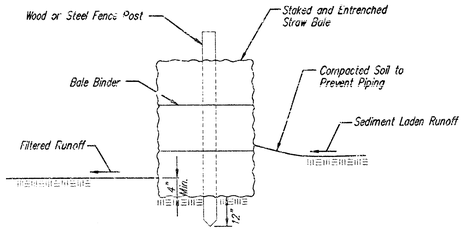

STRAW BALE BARRIERS

Material Specification:

Bale slope barriers may be constructed of wheat straw, oat straw, prairie hay, or bromegrass hay that is free of weeds declared noxious by the Kansas State Board of Agriculture.
The stakes used to anchor the bales should be a hardwood material with the following minimum dimensions: 2" square (nominal) by 4' long.

Placement:

A slope barrier should be used at the toe of a slope when a ditch does not exist. The slope barrier should be placed on nearly level ground 5' to 10' away from the toe of a slope. The barrier is placed away from the toe of the slope to provide adequate storage for settling out sediment.
When practicable, bale slope barriers should be placed along contours to avoid a concentration of flow.
Bale slope barriers can also be placed along right-of-way fence lines to keep sediment from crossing onto adjacent property. When placed in this manner, the slope barrier will not likely follow contours.

Proper installation method:

Excavate a trench the length of the planned slope barrier that is 4" deep and a bale's width wide. Make sure that the trench is excavated along a single contour. When practicable, slope barriers should be placed along contours to avoid a concentration of flow. Place the soil on the upslope side of the trench for later use.
Place the bales in the trench, making sure that they are butted tightly. Two stakes should be driven through each bale along the centerline of the ditch check, approximately 6" to 8" in from the bale ends. Stakes should be driven at least 12" into the ground.
Once all the bales have been installed and anchored, place the excavated soil against the upslope side of the check and compact it. The compacted soil should be no more than 3" to 4" deep.

List of common placement/installation mistakes to avoid:

When practicable, do not place bale slope barriers across contours. Slope barriers should be placed along contours to avoid a concentration of flow. Concentrated flow over a slope barrier creates a scour hole on the downslope side of the barrier. The scour hole eventually undermines the bales and the barrier fails.
Do not place bale slope barriers in areas with shallow soils underlain by rock. If the barrier is not anchored sufficiently, it will wash out.
Bale slope barriers must be dug into the ground. Bales at ground level do not work because they allow water to flow under the barrier.

Inspection and Maintenance:

Bale slope barriers should be inspected every 7 days and within 24 hours of a rainfall of 1/2" or more. The following is a list of questions that should be addressed during each inspection:

Are there any points along the slope barrier where water is concentrating?
Does water flow under the slope barrier?
Does water flow through spaces between abutting bales?
Are any bales dislodged?
Are bales decomposing due to age and/or water damage?
Does sediment need to be removed from behind the slope barrier?

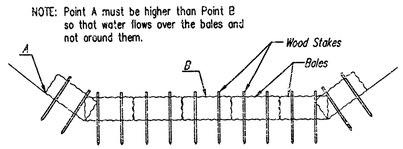

STRAW BALE DITCH CHECKS

Material Specification:

Bale ditch checks may be constructed of wheat straw, oat straw, prairie hay, or bromegrass hay that is free of weeds declared noxious by the Kansas State Board of Agriculture.
The stakes used to anchor the bales should be a hardwood material with the following minimum dimensions: 2" square (nominal) by 4' long.
Optional: The downstream scour apron should be constructed of a double-netted straw erosion-control blanket at least 6' wide.
Optional: The metal landscape staples used to anchor the erosion-control blanket should be at least 8" long.

Placement:

Bale ditch checks should be placed perpendicular to the flowline of the ditch.
The ditch check should extend far enough so that the ground level at the ends of the check is higher than the top of the lowest center bale. This prevents water from flowing around the check.
Checks should not be placed in ditches where high flows are expected. Rock checks should be used instead.
Bales should be placed in ditches with slopes of 6% or less. For slopes steeper than 6%, rock checks should be used.
The following table provides check spacing for a given ditch grade:

Ditch grade (%)	Check Spacing (feet)
0.5	200
1.0	200
2.0	100
3.0	65
4.0	50
5.0	40
6.0	30

Proper installation method:

Excavate a trench perpendicular to the ditch flowline that is 4" deep and a bale's width wide. Extend the trench in a straight line along the entire length of the proposed ditch check. Place the soil on the upstream side of the trench-it will be used later.
Optional: On the downstream side of the trench, roll out a length of erosion-control blanket (scour apron) equal to the length of the trench. Place the upstream edge of the erosion-control blanket along the bottom upstream edge of the trench. The erosion control blanket should be anchored in the trench with one row of 8" landscape staples placed on 18" centers. The remainder of the erosion-control blanket (the portion that is not lying in the trench) will serve as the downstream scour apron. This section of the blanket should be anchored to the ground with 8" landscape staples placed around the perimeter of the blanket on 18" centers. The remainder of the blanket should be anchored using two evenly spaced rows of 8" landscape staples on 18" centers placed perpendicular to the flowline of the ditch.
Place the bales in the trench, making sure that they are butted tightly. Two stakes should be driven through each bale along the centerline of the ditch check, approximately 6" to 8" in from the bale ends. Stakes should be driven at least 12" into the ground.
Once all the bales have been installed and anchored, place the excavated soil against the upstream side of the check and compact it. The compacted soil should be no more than 3" to 4" deep and extend upstream no more than 24".

List of common placement/installation mistakes to avoid:

Do not place a bale ditch check directly in front of a culvert outlet. It will not stand up to the concentrated flow.
Do not place bale ditch checks in ditches that will likely experience high flows. They will not stand up to concentrated flow.
Follow prescribed ditch-check spacing guidelines. If spacing guidelines are exceeded, erosion will occur between the ditch checks.
Do not allow water to flow around the ditch check. Make sure that the ditch check is long enough so that the ground level at the ends of the check is higher than the top of the lowest center bale.
Do not place bale ditch checks in channels with shallow soils underlain by rock. If the check is not anchored sufficiently, it will wash out.
Bale ditch checks must be dug into the ground. Bales at ground level do not work because they allow water to flow under the check.

Inspection and Maintenance:

Bale ditch checks should be inspected every 7 days and within 24 hours of a rainfall of 1/2" or more. The following is a list of questions that should be addressed during each inspection:

Does water flow around the ditch check?
Does water flow under the ditch check?
Does water flow through spaces between abutting bales?
Are any bales and/or scour aprons (optional) dislodged?
Are bales decomposing due to age and/or water damage?
Does sediment need to be removed from behind the ditch check?

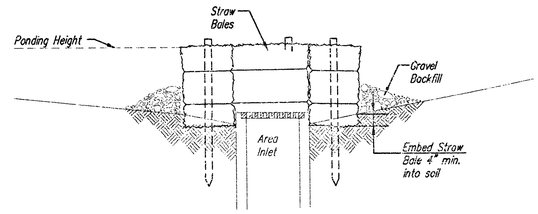

SECTION A-A

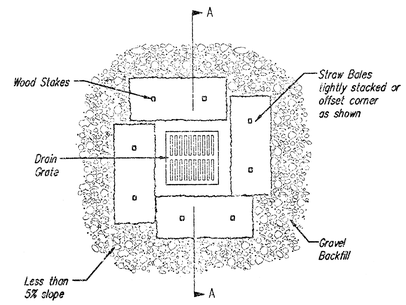

STRAW BALE BARRIERS FOR AREA INLETS
(INLET PROTECTION)

Material Specification:

Bale area inlet barriers should be constructed of wheat straw, oat straw, prairie hay, or bromegrass hay that is free of weeds declared noxious by the Kansas State Board of Agriculture.
The stakes used to anchor the bales should be a hardwood material with the following minimum dimensions: 2" square (nominal) by 4' long.

Placement:

Bale area inlet barriers should be placed directly around the perimeter of a drop inlet.
When a bale area inlet barrier is located near an inlet that has steep approach slopes, the storage capacity behind the barrier is drastically reduced. Timely removal of sediment must occur for a barrier to operate properly in this location.

Proper Installation Method:

Excavate a trench around the perimeter of the area inlet that is at least 4" deep by a bale's width wide.
Place the bales in the trench, making sure that they are butted tightly. Some bales may need to be shortened to fit into the trench around the area inlet. Two stakes should be driven through each bale, approximately 6" to 8" in from the bale ends.
Stakes should be driven at least 12" into the ground.
Once all the bales have been installed and anchored, place the excavated soil against the receiving side of the barrier and compact it. The compacted soil should be no more than 3" to 4" deep.
Note: When a bale area inlet barrier is placed in a shallow median ditch, make sure that the top of the barrier is not higher than the paved road. In this configuration, water may spread onto the roadway causing a hazardous condition.

List of common placement installation mistakes to avoid:

Bales should be placed directly against the perimeter of the area inlet. This allows overlapping water to flow directly into the inlet instead of onto nearby soil causing scour.
Bale area inlet barriers must be dug into the ground. Bales at ground level do not work because they allow water to flow under the barrier.

Inspection and Maintenance:

Bale area inlet barriers should be inspected every 7 days and within 24 hours of a rainfall 1/2" or more. The following is a list of questions that should be addressed during each inspection:

Does water flow under the area inlet barrier?
Does water flow through spaces between abutting bales?
Are any bales dislodged?
Are bales decomposing due to age and/or water damage?
Does sediment need to be removed from behind the area inlet barrier?

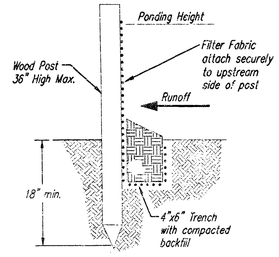

SILT FENCE BARRIERS

SILT FENCE BARRIERS

Material Specification:

Silt fence fabric should conform to the AASHTO M288 96 silt fence specification.
The posts used to support the silt fence fabric should be a hardwood material with the following minimum dimensions: 2" square (nominal) by 4' long.
Silt fence fabric should be attached to the wooden posts with staples, wire, zip ties, or nails.

Placement:

A slope barrier should be used at the toe of a slope when a ditch does not exist. The slope barrier should be placed on nearly level ground 5' to 10' away from the toe of a slope. The barrier is placed away from the toe of the slope to provide adequate storage for settling out sediment.
When practicable, silt fence slope barriers should be placed along contours to avoid a concentration of flow.
Silt fence slope barriers can also be placed along right-of-way fence lines to keep sediment from crossing onto adjacent property. When placed in this manner, the slope barrier will not likely follow contours.

Proper installation method:

Excavate a trench the length of the planned slope barrier that is 6" deep by 4" wide.
Make sure that the trench is excavated along a single contour. When practicable, slope barriers should be placed along contours to avoid a concentration of flow. Place the soil on the upslope side of the trench for later use.
Roll out a continuous length of silt fence fabric on the downslope side of the trench.
Place the edge of the fabric in the trench starting at the top upslope edge. Line all three sides of the trench with the fabric. Backfill over the fabric in the trench with the excavated soil and compact. After filling the trench, approximately 24" to 36" of silt-fence fabric should remain exposed.
Lay the exposed silt fence upslope of the trench to clear an area for driving in the posts.
Just downslope of the trench, drive posts into the ground to a depth of at least 13".
Place posts no more than 4' apart.
Attach the silt fence to the anchored post with staples, wire, zip ties, or nails.

List of common placement/installation mistakes to avoid:

When practicable, do not place silt fence slope barriers across contours. Slope barriers should be placed along contours to avoid a concentration of flow. When the flow concentrates, it overtops the barrier and the silt fence slope barrier quickly deteriorates.
Do not place silt-fence posts on the upslope side of the silt fence fabric. In this configuration, the force of the water is not restricted by the posts, but only by the staples (wire, zip ties, nails, etc.). The silt fence will rip and fail.
Do not place silt fence slope barriers in areas with shallow soils underlain by rock. If the barrier is not sufficiently anchored, it will wash out.
Silt fence slope barriers must be dug into the ground-silt fence at ground level does not work because water will flow underneath.

Inspection and Maintenance:

Silt fence slope barriers should be inspected every 7 days and within 24 hours of a rainfall of 1/2" or more. The following is a list of questions that should be addressed during each inspection:

Are there any points along the slope barrier where water is concentrating?
Does water flow under the slope barrier?
Do the silt fences sag excessively?
Has the silt fence torn or become detached from the posts?
Does sediment need to be removed from behind the slope barrier?

CITY OF WICHITA

SOIL EROSION BMP DETAILS

CHRISTOPHER M. CARRIER, P.E.
STORM WATER ENGINEER

PROJECT NUMBER

OCA NO.

DATE
March 2004

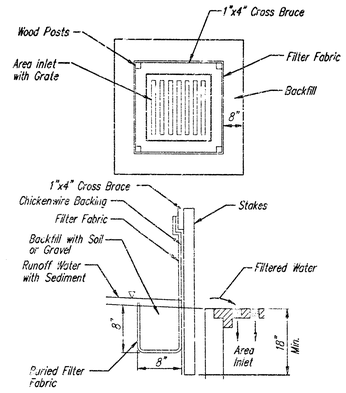

SILT FENCE BARRIERS FOR AREA INLETS
(INLET PROTECTION)

Material Specification:

Silt fence fabric should conform to the AASHTO M288 96 silt fence specification.
The wire or polymeric mesh backing used to help support the silt fence fabric should conform to the AASHTO M288 96 silt fence specification.
The posts used to support the silt fence fabric should be a hardwood material with the following minimum dimensions: 2" square (nominal) by 4' long.
The material used to frame the tops of the posts should be 1" by 4" boards
Silt fence fabric and support backing should be attached to the wooden posts and frame with staples, wire, zip ties, or nails.

Placement:

Place a silt fence drop inlet barrier in a location where it is unlikely to be overtopped.
Water should flow through silt fence, not over it. Silt fence barriers for area inlets often fail when repeatedly overtopped.
When used as a barrierfor area inlets, silt fence fabric and posts must be supported at the top by a wooden frame.
When a silt fence barrier for area inlets is located near an inlet that has steep approach slopes, the storage capacity behind the barrier is drastically reduced. Timely removal of sediment must occur for a barrier to operate properly in this location.

Proper installation method:

Excavate a trench around the perimeter of the area inlet that is at least 8" deep by 8" wide.
Drive posts to a depth of at least 18" around the perimeter of the area inlet.
The distance between posts should be 4' or less. If the distance between two adjacent corner posts is more than 4', add another post(s) between them.
Connect the tops of all the posts with a wooden frame made of 1" by 4" boards. Use nails or screws for fastening.
Attach the wire or polymeric-mesh backing to the outside of the post/frame structure with staples, wire, zip ties, or nails.
Roll out a continuous length of silt fence fabric long enough to wrap around the perimeter of the area inlet. Add more length for overlapping the fabric joint. Place the edge of the fabric in the trench, starting at the outside edge of the trench. Line all three sides of the trench with the fabric. Backfill over the fabric in the trench with the excavated soil and compact. After filling the trench, approximately 24" to 36" of silt fence fabric should remain exposed.
Attach the silt fence to the outside of the post/frame structure with staples, wire, zip ties, or nails. The joint should be overlapped to the next post.

Note: When a silt fence barrier for area inlet is placed in a shallow median ditch, make sure that the top of the barrier is not higher than the paved road. In this configuration, water may spread onto the roadway causing a hazardous condition.

List of common placement/installation mistakes to avoid:

Water should flow through a silt fence barrier for area inlet-not over it. Place a silt fence barrier for area inlet in a location where it is unlikely to be overtopped. Silt fence barrier for area inlets often fail when repeatedly overtopped.
Do not place posts on the outside of the silt fence barrier for area inlet. In this configuration, the force of the water is not resisted by the posts, but only by the staples (wire, zip-ties, nails, etc.). The silt fence will rip and fail.
Do not install silt fence barrier for area inlets without framing the top of the posts.
The corner posts around area inlets are stressed in two directions whereas a normal silt fence is only stressed in one direction. This added stress requires more support.

Inspection and Maintenance:

Silt fence barrier for area inlets should be inspected every 7 days and within 24 hours of a rainfall of 1/2" or more. The following is a list of questions that should be addressed during each inspection:

Does water flow under the silt fence?
Does the silt fence sag excessively?
Has the silt fence torn or become detached from the posts?
Does sediment need to be removed from behind the area inlet barrier?

NOTE: Point A must be higher than Point B so that water flows over the bales and not around them.

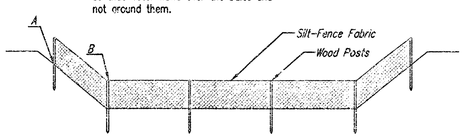

ELEVATION

SILT FENCE DITCH CHECKS
(STREAM PROTECTION)

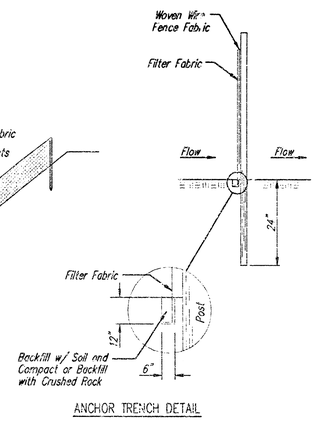

ANCHOR TRENCH DETAIL

Material Specification:

Silt fence fabric should conform to the AASHTO M288 96 silt fence specification.
The posts used to support the silt fence fabric should be a hardwood material with the following minimum dimensions: 2" square (nominal) by 4' long.
Silt fence fabric should be attached to the wooden posts with staples, wire, zip ties, or nails.

Placement:

Place silt fence in ditches where it is unlikely that it will be overtopped.
Water should flow through a silt fence ditch check, not over it. Silt fence ditch checks often fail when overlopped.
Silt fence ditch checks should be placed perpendicular to the flowline of the ditch.
The silt fence should extend far enough so that the ground level at the ends of the fence is higher than the top of the low point of the fence. This prevents water from flowing around the check.
Checks should not be placed in ditches where high flows are expected. Rock checks should be used instead.
Silt fence should be placed in ditches with slopes of 6% or less. For slopes steeper than 6%, rock cherks should be used.

The following table provides check spacing for a given ditch grade:

Ditch Check Ditch grade (%)	Spacing Check Spacing (feet)
0.5	200
1.0	200
2.0	100
3.0	65
4.0	50
5.0	40
6.0	30

Proper installation method:

Excavate a trench perpendicular to the ditch flowline that is at least 12" deep by 6" wide.
Extend the trench in a straight line along the entire length of the proposed ditch check.
Place the soil on the upstream side of the trench for later use.
Roll out a continuous length of silt fence fabric on the downstream side of the trench.
Place the edge of the fabric in the trench starting at the top upstream edge of the trench.
Line two sides of the trench with the fabric as shown on detail. Backfill over the fabric in the trench with the excavated soil and compact. After filling the trench, approximately 24" to 36" of silt fence fabric should remain exposed.
Lay the exposed silt fence on the upstream side of the trench to clear an area for driving in the posts. Just downstream of the trench, drive posts into the ground to a depth of at least 24". Place posts no more than 4' apart.
Attach the silt fence to the anchored post with staples, wire, zip ties, or nails.

List of common placement/installation mistakes to avoid:

Water should flow through a silt fence ditch check-not over it. Place silt fence in ditches where it is unlikely that it will be overtopped. Silt fence installations quickly deteriorate when water overtops them.
Do not place silt fence posts on the upstream side of the silt fence fabric. In this configuration, the force of the water is not restricted by the posts, but only by the staples (wire, zip ties, nails, etc.). The silt fence will rip and fail.
Do not place a silt fence ditch check directly in front of a culvert outlet. It will not stand up to the concentrated flow.
Do not place silt fence ditch checks in ditches that will likely experience high flows. They will not stand up to concentrated flow.
Follow prescribed ditch check spacing guidelines. If spacing guidelines are exceeded, erosion will occur between the ditch checks.
Do not allow water to flow around the ditch check. Make sure that the ditch check is long enough so that the ground level at the ends of the fence is higher than the low point on the top of the fence.
Do not place silt fence ditch checks in channels with shallow soils underlain by rock. If the check is not anchored sufficiently, it will wash out.

Inspection and Maintenance:

Silt fence ditch checks should be inspected every 7 days and within 24 hours of a rainfall of 1/2" or more. The following is a list of questions that should be addressed during each inspection:

Does water flow around the ditch check?
Does water flow under the ditch check?
Does the silt fence sag excessively?
Has the silt fence torn or become detached from the posts?
Does sediment need to be removed from behind the ditch check?

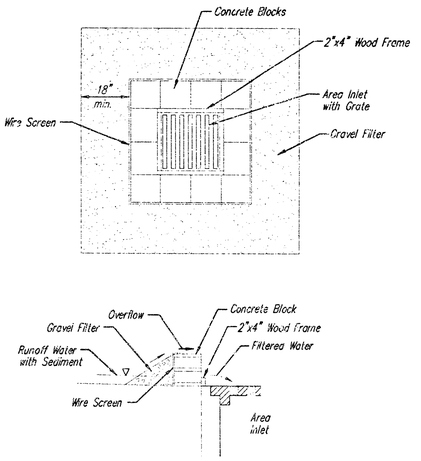

CONCRETE BLOCK FILTER FOR AREA DRAIN
(INLET PROTECTION)

Gravel barriers provide little filtering of large inflow waters. However, when installed correctly and maintained, they can effectively treat low runoff flows.

Placement of gravel filters around area drains must be completed in a manner that will not cause local flooding.

Gravel filters can be used if the immediate and adjacent area to the area drain consists of soil or pavement.

Only gravel filters are to be installed on top of the pavement.

Instructions for Installing:

STEP 1: Place concrete blocks around the grate. The blocks can be stacked one or two high and should be supported by a 2"x4" board.
STEP 2: Wrap 1/2" mesh wire screen around the concrete blocks.
STEP 3: Place 1" to 1-1/2" diameter rock around the blocks and wire screen. Be sure the rock extends down from the top of the concrete block.
STEP 4: To prevent damage to vehicles, signs warning drivers about the structures may be necessary.

An alternative method is use of gravel bags that are supported to prevent collapsing.

Use of rock having diameters smaller than 1" may result in clogging of pores and reduce the amount of water flowing into an inlet.

Maintenance:

All gravel filters installed around area drains should be inspected and repaired after each runoff event. Sediment should be removed when material is within 3" of the top of any block. Periodically, the gravel should be raked to increase infiltration and filtering of runoff waters. Accumulated sediment is to be removed immediately from roads and streets after every runoff event.

CITY OF WICHITA

SOIL EROSION BMP DETAILS

CHRISTOPHER M. CARRIER, P.E.
STORM WATER ENGINEER

PROJECT NUMBER

DCA NO.

DATE
March 2004

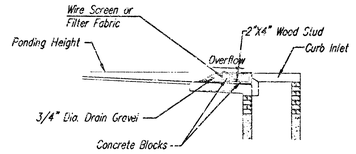

SECTION A-A

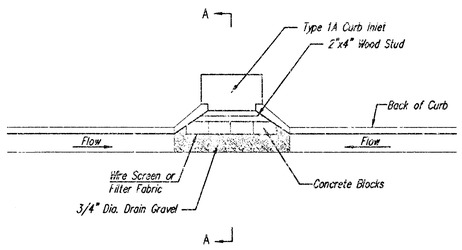

CURB INLET GRAVEL FILTERS
(INLET PROTECTION-RESIDENTIAL STREETS ONLY)

NOTE: Other types of curb inlet protection may be approved by the city so long as equal protection is provided.

A gravel inlet filter shall be installed at sump locations on residential streets. This type of protection is not to be used on arterial or collector streets at any time that it would pose an undue traffic hazard.

Instructions for Installing:

STEP 1: Place concrete blocks around the inlet as shown on drawing. Insert 2x4 board as shown.
STEP 2: Wrap 1/2" mesh wire screen around the concrete blocks.
STEP 3: Place 1" to 1-1/2" diameter rock around the blocks and wire screen. Be sure the rock extends down from the top of the concrete block.
STEP 4: To prevent damage to vehicles, signs warning drivers about the structures may be necessary. An alternative installation is the use of gravel bags supported by a 2"x4" board to prevent collapsing.

Use of rock with diameters smaller than 1" in the bag may result in clogging of pores and reduce the amount of water flowing into an inlet.

Maintenance:

All curb inlet gravel filters shall be inspected and repaired after each runoff event. Sediment deposits are to be removed once material is within 8 cm (3 inches) of the top of any block. Periodically, the gravel shall be raked to increase infiltration and filtering of runoff waters. Accumulated sediment is to be removed immediately from roads and streets.

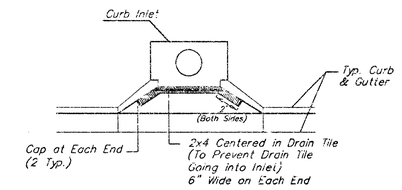

Note:
Place 4" perforated PVC pipe filled w/ 1/2"-1" Dia. gravel. Place pipe in front of Curb Inlet as Shown.

2x4 LENGTH	INLET TYPE	INLET OPENING
5'-6"	1-A	5'-0"
10'-6"	1-A	10'-0"
15'-6"	1-A	15'-0"

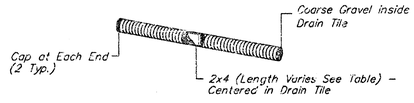

CURB INLET PPOTECTION
4" Perforated Pipe w/ Gravel

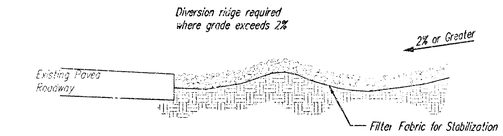

SECTION C-C

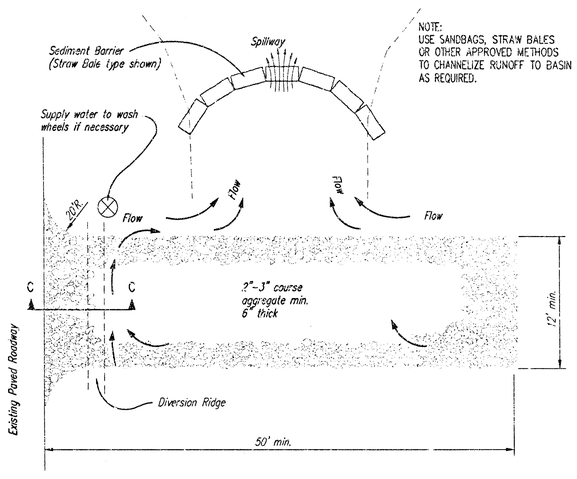

STABILIZED CONSTRUCTION ENTRANCE

NOTES:

1. THE ENTRANCE SHALL BE MAINTAINED IN A CONDITION THAT WILL PREVENT TRACKING OR FLOWING OF SEDIMENT ONTO PUBLIC RIGHTS-OF-WAY. THIS MAY REQUIRE TOP DRESSING, REPAIR AND/OR CLEANOUT OF ANY MEASURES USED TO TRAP SEDIMENT.
2. WHEN NECESSARY, WHEELS SHALL BE CLEANED PRIOR TO ENTRANCE ONTO PUBLIC RIGHT-OF-WAY.
3. WHEN WASHING IS REQUIRED, IT SHALL BE DONE ON AN AREA STABLIZED WITH CRUSHED STONE THAT DRAINS INTO AN APPROVED SEDIMENT TRAP OR SEDIMENT BASIN, AS SHOWN ABOVE.
4. DRIVE ENTRANCES ONTO RESIDENTIAL LOTS WILL NOT BE REQUIRED TO HAVE THE SEDIMENT BARRIER SHOWN, BUT WHEEL WASHING MAY BE REQUIRED IF STABILIZED ENTRANCE IS NOT SUFFICIENT TO KEEP MUD FROM BEING TRACKED ONTO ADJACENT STREET. ENTRANCE SHALL EXTEND FROM BACK OF CURB TO DWELLING.

CITY OF WICHITA

SOIL EROSION BMP DETAILS

CHRISTOPHER M. CARRIER, P.E.
STORM WATER ENGINEER

PROJECT NUMBER ———— | OCA NO. ————

DATE March 2004

STONEHEDGE 3RD ADDITION
WICHITA, SEDGWICK COUNTY, KANSAS

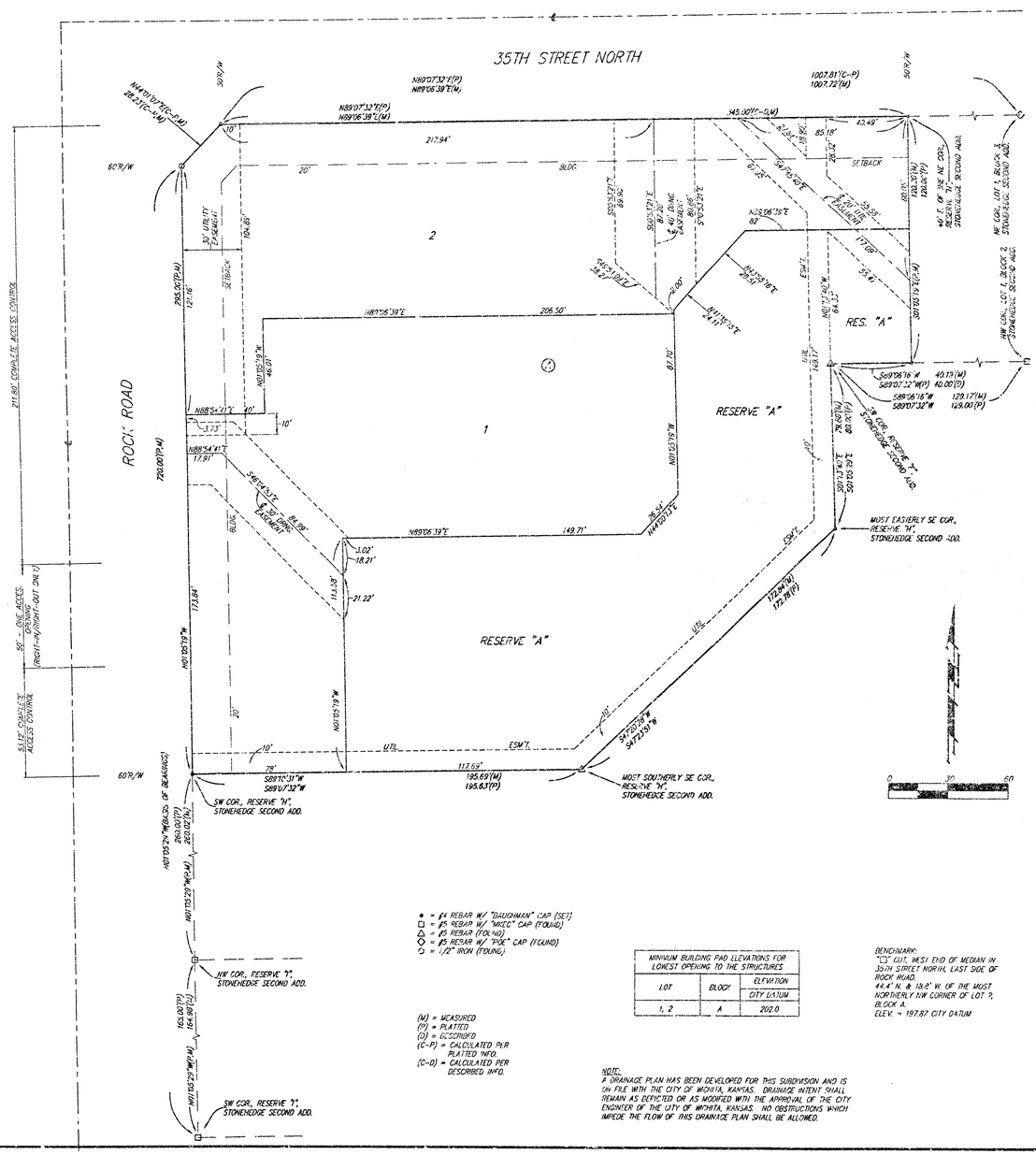

● = ¼" REBAR W/ "BAUGHMAN" CAP (SET)
□ = #5 REBAR W/ "MKEC" CAP (FOUND)
△ = #5 REBAR (FOUND)
◇ = #5 REBAR W/ "PDE" CAP (FOUND)
○ = 1/2" IRON (FOUND)

(M) = MEASURED
(P) = PLATTED
(D) = DESCRIBED
(C-P) = CALCULATED PER PLATTED INFO.
(C-D) = CALCULATED PER DESCRIBED INFO.

MINIMUM BUILDING PAD ELEVATIONS FOR LOWEST OPENING TO THE STRUCTURES		
LOT	BLOCK	ELEVATION CITY DATUM
1, 2	A	202.0

BENCHMARK:
"□" CUT, WEST END OF MEDIAN IN 35TH STREET NORTH, EAST SIDE OF ROCK ROAD.
44.4' N. & 18.8' W. OF THE MOST NORTHERLY NW CORNER OF LOT 2, BLOCK A.
ELEV. = 1197.87 CITY DATUM

NOTE:
A DRAINAGE PLAN HAS BEEN DEVELOPED FOR THIS SUBDIVISION AND IS ON FILE WITH THE CITY OF WICHITA, KANSAS. DRAINAGE INTENT SHALL REMAIN AS DEPICTED OR AS MODIFIED WITH THE APPROVAL OF THE CITY ENGINEER OF THE CITY OF WICHITA, KANSAS. NO OBSTRUCTIONS WHICH IMPEDE THE FLOW OF THIS DRAINAGE PLAN SHALL BE ALLOWED.

State of Kansas)
Sedgwick County) SS

We, Baughman Company, P.A., Surveyors in aforesaid county and state do hereby certify that we have surveyed and platted "STONEHEDGE 3RD ADDITION", Wichita, Sedgwick County, Kansas and that the accompanying plat is a true and correct exhibit of the property surveyed, described as Reserve "H" and the west 40.00 feet of Reserve "F", Stonehedge Second Addition, an addition to Wichita, Sedgwick County, Kansas.

Existing public easements and dedications being vacated by virtue of K.S.A. 12-512(b).

All being situated in the NW1/4 of Sec. 32, Twp. 26-S, R-2-E of the 6th P.M., Sedgwick County, Kansas.

Baughman Company, P.A.

_____, Surveyor
Michael G. Conrey

Know all men by these presents that we, the undersigned, have caused the land in the surveyors certificate to be platted into Lots, a Block, and a Reserve, to be known as "STONEHEDGE 3RD ADDITION", Wichita, Sedgwick County, Kansas. The utility easements are hereby granted as indicated for the construction and maintenance of all public utilities. The drainage easements are hereby granted as indicated for drainage purposes. Reserve "A" is hereby reserved for landscaping, open space, lakes, berms, gazebos, drainage purposes, retaining walls, access and circulation drives, parking stalls, and utilities as confined to easements. Reserve "A" shall be owned and maintained by the owner of Lot 1, Block A. Access controls shall be as depicted on the face of the plat and are hereby granted to the City of Wichita, Kansas. The Minimum Building Pad Elevations for the lowest opening to the structures shall be as indicated on the face of the plat.

Stonehedge, LLC, a Kansas limited liability company

_____, Managing Member
Thomas W. Boyd

State of Kansas)
Sedgwick County) SS

The foregoing instrument acknowledged before me, this_____day of_____, 2004, by Thomas W. Boyd, Managing Member of Stonehedge, LLC, a Kansas limited liability company, on behalf of the limited liability company.

_____, Notary Public
My App't. Exp._____

We, the undersigned holders of a mortgage on the above described property, do hereby consent to this plat of "STONEHEDGE 3RD ADDITION", Wichita, Sedgwick County, Kansas.

Southwest National Bank

_____, _____
(Title)

State of Kansas)
Sedgwick County) SS

The foregoing instrument acknowledged before me, this_____day of_____, 2004, by_____, _____ (Title) of Southwest National Bank, on behalf of the bank.

_____, Notary Public
My App't. Exp._____

This plat of "STONEHEDGE 3RD ADDITION", Wichita, Sedgwick County, Kansas has been submitted to and approved by the Wichita-Sedgwick County Metropolitan Area Planning Commission, Wichita, Kansas.

Dated this_____day of_____, 2004.
Wichita-Sedgwick County Metropolitan Area Planning Commission

_____, Chair
Ronald L. Marnell

_____, Secretary
John L. Schlegel

This plat approved and all dedications shown hereon accepted by the City Council of the City of Wichita, Kansas, this_____day of_____, 2004.

_____, Mayor
Carlos Mayans

_____, City Clerk
Pat Graves

Reviewed in accordance with K.S.A. 58-2005 on this_____day of_____, 2004.

_____
Tricia L. Robello, L.S. #1246
Deputy County Surveyor
Sedgwick County, Kansas

Entered on transfer record this_____day of_____, 2004.

_____, County Clerk
Don Brace

State of Kansas)
Sedgwick County) SS

This is to certify that this plat has been filed for record in the office of the Register of Deeds, this_____day of_____, 2004 at_____o'clock__M; and is duly recorded.

_____, Register of Deeds
Bill Meek

_____, Deputy
Linda Kizzire

BAUGHMAN COMPANY P.A.
ENGINEERING, SURVEYING & PLANNING
316-262-7271 • 315 ELLIS • WICHITA, KANSAS 67211
F:\PLAT\STONEHEDGE 3RD ADDITION\DWG\STONEHEDGE 3RD ADD-4.DGN