STORM SEWER LOCATED AT CALDWELL ELEMENTARY SCHOOL

1433 PPS (607861)

CITY OF WICHITA, KANSAS

INDEX OF SHEETS

1	Cover Sheet
2-3	Plan and Profile
4	Type P Manhole Detail

GENERAL NOTES

1. Contractor will be required to provide notice to utility companies a minimum of twenty-four (24) hours prior to any excavation, as follows:

Kansas One-Call	887-2470

The contractor must notify the following in case of an emergency:

Cox Communications	262-4270
K.P.L. Gas Service Company	383-5650
Kansas Gas & Electric Company	261-6152
Southwestern Bell Telephone Co.	1-800-870-8390
Wichita Water & Sewer Dept.	268-4555
Kansas Gas Service	832-3010

2. Existing utilities and their location, as shown on the plans, represent the best information available for design. Location information has been obtained from the various utility companies and is either from company record drawings or company provided field location. The Contractor will be required to work around existing utilities which do not conflict with the proposed construction.

3. The Contractor to verify utility locations prior to construction of this project.

4. Utility service and installation shall be coordinated with the respective utility owners. Contacts are:

Kansas Gas Service	Charlene Lawless	1-888-482-1950
KGE	Russ Chitwood	261-6251
Water & Sewer Dept.	Bill Perkins	268-4555
Southwestern Bell	Bob Alley	268-2245
Cox Communications	Mark Anoya	262-4270

5. All lawn/turf areas disturbed by constriction of proposed improvements shall be restored with sod. All costs for this work shall be subsidiary to the lump sum price bid for "Site Restoration."

6. Traffic affected by the construction of this project shall be handled in accordance with the latest edition of the Manual on Uniform Traffic Control Devices.

7. All commercial sign to be moved by others prior to construction, unless noted.

8. Properties within the project may have underground irrigation systems (lawn sprinklers) which conflict with the new construction. Contractor shall remove such components as needed during construction of the project. The irrigation system shall be reinstalled in like kind before project completion. Any irrigation system modifications required because of project improvements shall be coordinated with the property owner. Portion of underground irrigation systems not in conflict with new construction shall be protected fro damage and shall remain in place. All work related to underground irrigations/sprinklers shall be subsidiary to Site Restoration.

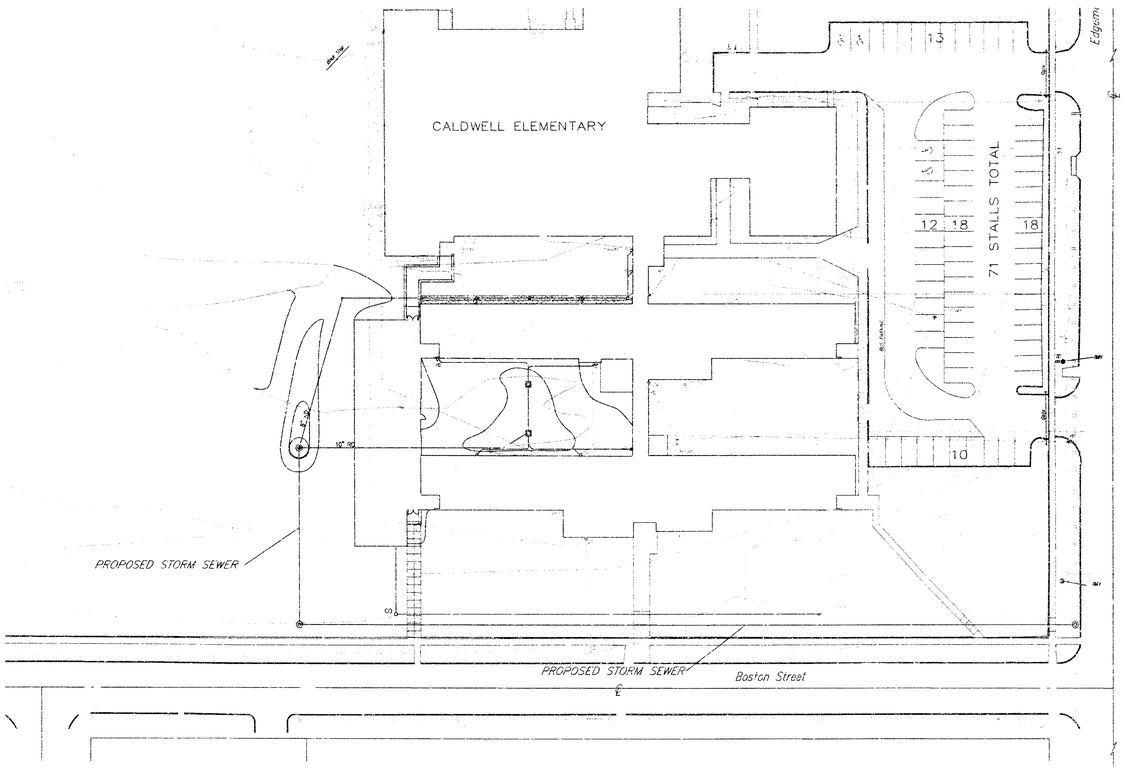

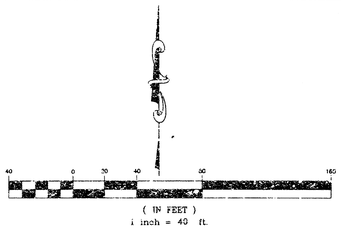

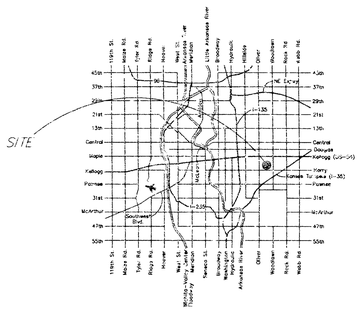

LOCATION MAP

BENCHMARK
Cow Disc on the Southeast Traffic pole at the intersection of Harry and Edgemoor.
Elev= 145.60

APPROVED AS NOTED

City Engineer Office URH 3/10/04

NOTE TO CONTRACTORS

Installation, inspection and testing for this project is to be provided by a Licensed Consulting Engineering Firm under contract with the Owner/Developer. Said inspection to be in accordance with the City of Wichita standard construction engineering practices and certified by a Licensed Professional Engineer. No work shall be performed in dedicated easements or public right-of-way by the Contractor without such inspection nor shall any work be commenced without written authorization by the City Engineer. All Construction and Materials shall comply with the City of Wichita Specifications and Standards (on file and available in the City Engineer's Office).

AS-BUILT
Date
Signed

kemiller engineering
516 S. Market,
Wichita, KS 67202
316/264-0242

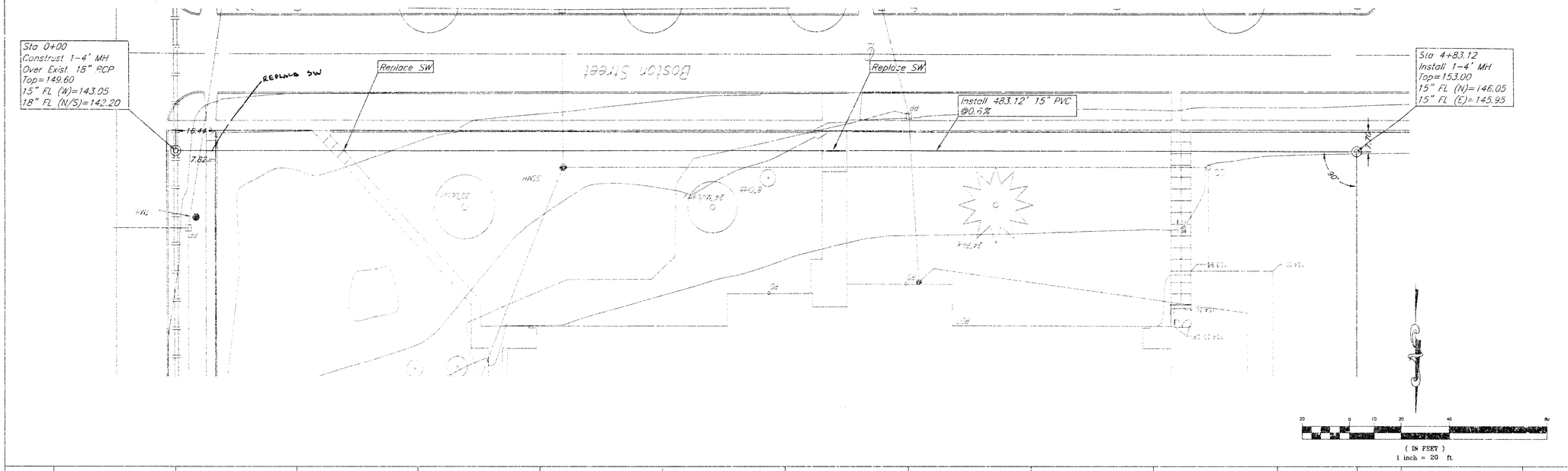

Storm Sewer to Serve

Caldwell Elementary School

Wichita, Kansas

kemiller engineering

516 S. Market
Wichita, KS 67202
316/264-0242

PROJECT NUMBER			
1433 PPS (607861)			
KEM NO. 03019	FILE pps1	DATE 3/4/01	SHEET 2
DESIGN pb	DRAWN bb	REVISED	OF 4

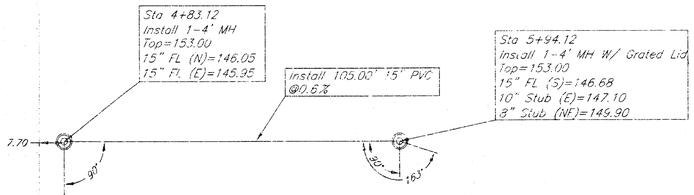

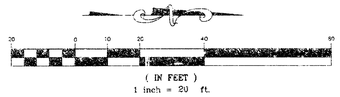



Storm Sewer to Serve

Caldwell Elementary School

Wichita, Kansas

kemiller engineering

516 S. Market
Wichita, KS 67202
316/264-0242

PROJECT NUMBER			
1433 PPS (607861)			
KEM. NO. 03019	FILE ppc	DATE 3/4/04	SHEET 3
DESIGN bb	DRAWN bb	REVISED 3/10/04	OF 4

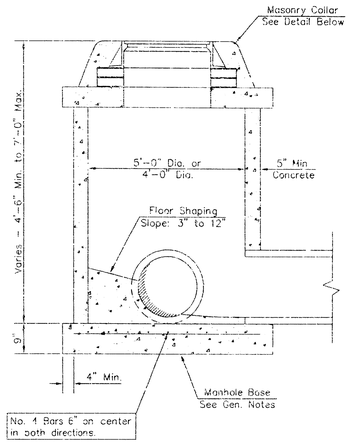

SHALLOW TYPE "P" MANHOLE

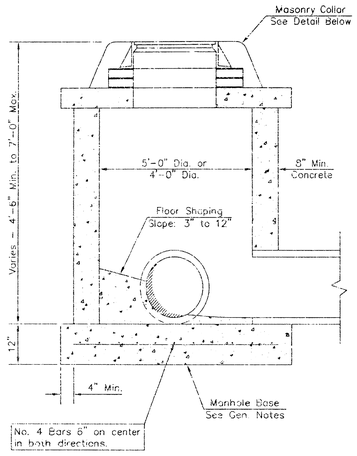

SHALLOW TYPE "C" MANHOLE

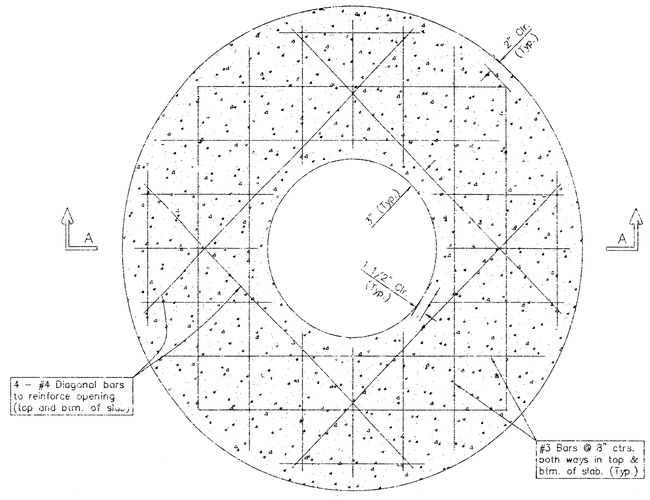

PLAN

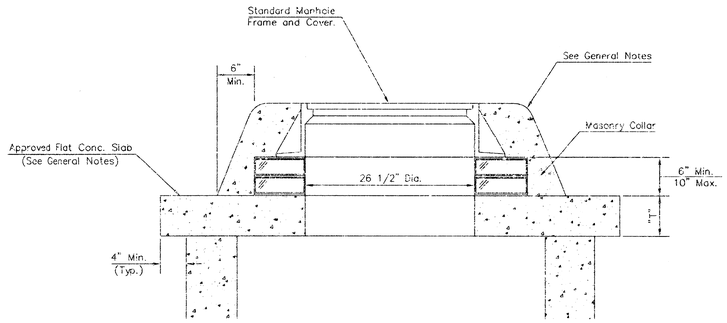

MASONRY COLLAR DETAIL

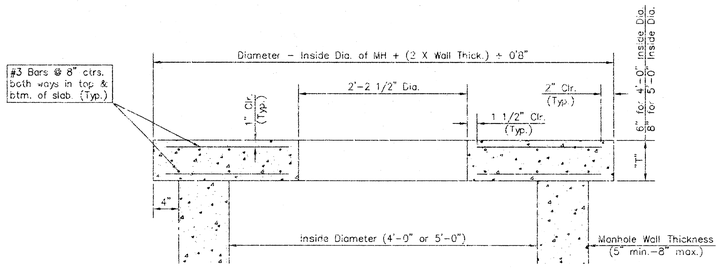

SECTION A--A

FLAT CONCRETE SLAB DETAILS

GENERAL NOTES

1. Mortar used in masonry construction shall contain 8 sacks of cement per cubic yard. Concrete used in manhole bases shall conform to the requirements of concrete for concrete pavement construction as specified in the city standard paving specifications using city concrete cement mix without air entraining admixture. Mortar shall be placed around the manhole ring as shown on the drawings when manholes are constructed in unpaved areas. Manholes constructed where pipe sizes are smaller than 24" shall have an inside diameter of 4'. Manholes constructed where pipe sizes are 24" or larger shall have an inside diameter of 5'. Completed manhole shall be without leaks and water tight.

2. Reinforcing steel shall be installed in the manhole bases and shall consist of no. 4 bars placed on 6" centers in both directions. The manhole base reinforcement shall be placed 6" above the bottom of the manhole base. All costs for furnishing and installing reinforcing steel shall be included in the unit price bid for the manhole.

3. The floors of all manholes shall be shaped with flow channels such that the manholes will be self cleaning and free of areas where solids could be deposited as sewage flows through the manhole from all inlet pipes to the outlet pipe. Flow channels shall be formed to match the bottom halves of the inflowing pipes and the outflowing pipe as shown by the drawings. Manhole floors shall have slopes of 3 inches per foot in the areas outside of the flow channels sloped toward the flow channels. Pipes laid through manholes shall have the top half removed to neat lines for the full inside diameter of the manhole. Manhole floors shall then be shaped around the bottom half of the pipe which forms the flow channel.

4. Pipes installed within the excavation made for the manhole shall be cradled with concrete to the limits of the manhole excavation. When clay pipe is used, the cradle shall extend to the first joint outside the manhole. The cradle shall be terminated at the clay pipe joint in a manner which will maintain the flexibility of the joint. Cost of cradle within manhole excavation or to clay pipe joints adjacent to manhole shall be included in the unit price bid for the manhole.

5. Manhole cover castings and manhole frame castings shall conform to the requirements as indicated in the standard specifications and as shown in the standard detail drawings.

6. The crowns of inflowing pipes shall never be set lower than the crown of the outflowing pipe.

7. Standard shallow manholes type "P" and "C" shall be paid for at the unit price bid per each for the type and diameter indicated. All standard shallow manhole diameters will be 4' unless indicated otherwise.

8. All brick used in manhole construction shall meet Grade SW of ASTM C652 or C62-87.

THE CITY OF WICHITA

CITY ENGINEER'S OFFICE
CITY HALL - SEVENTH FLOOR
455 NORTH MAIN STREET
WICHITA, KANSAS 67202
(316) 268-4501
(316) 268-4114 FAX

SHALLOW MANHOLES

TYPE 'P' & 'C'

M. E. LINDEBAK P.E. - CITY ENGINEER

PROJECT NUMBER	INDEX CODE
XXX-XXXXX	XXXXXX
DATE MAR 96	SHEET 4 OF 4