STORM WATER SEWER NO. 229

PROJECT NO.
468-76-245-81098-000-000-001

SHEET INDEX

NO.	CONTENTS
1	TITLE & LOCATION
2-11A	STORM SEWER PLAN
12	HIGHWAY CROSSING DETAIL
13-14	MANHOLE & INLET LOCATIONS
15	CONCRETE HEADWALL DETAIL
16	FLAP GATE HEADWALL DETAIL
17	AUTOMATIC FLAP GATE DETAIL
18	STANDARD CONCRETE MH. DETAIL
19	STANDARD INLET DETAIL

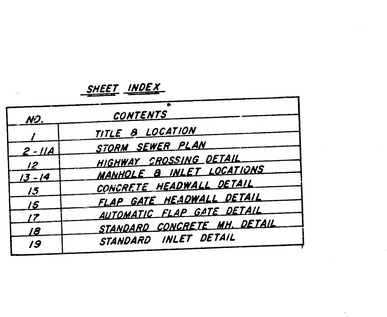

LOCATION MAP

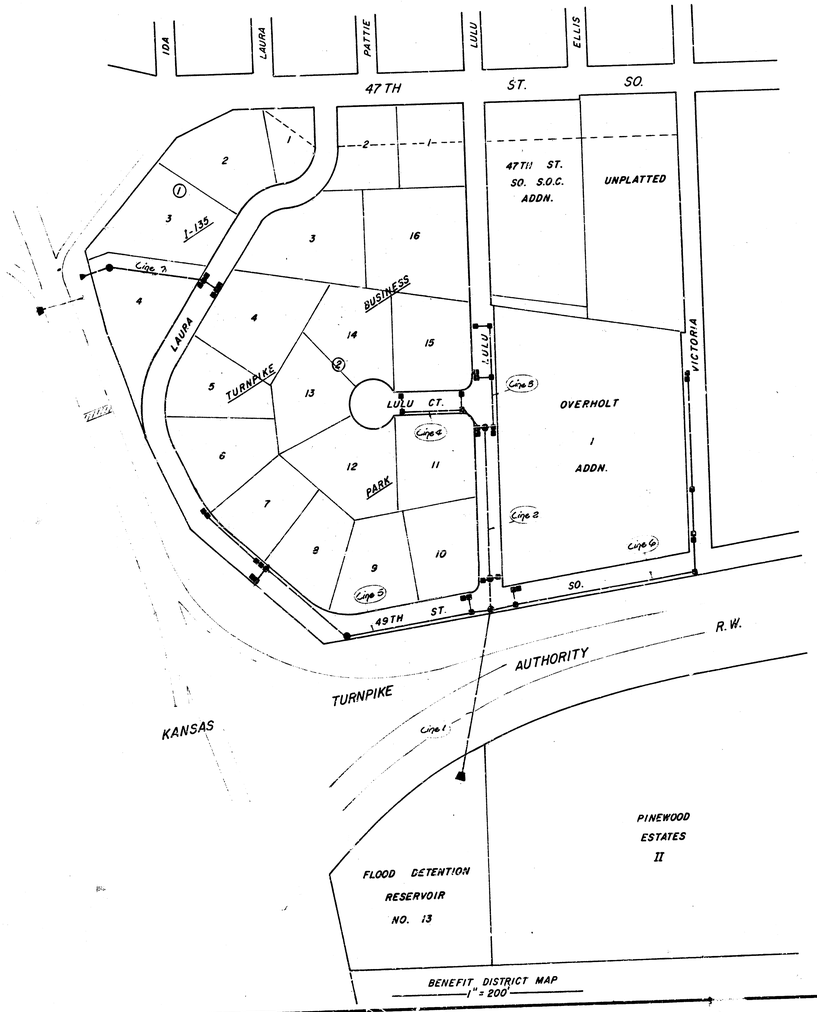

BENEFIT DISTRICT MAP
1" = 200

GENERAL NOTES

Contractor shall co-ordinate construction with the pavement, flood detention reservoir, and the sanitary sewer construction.

The contractor shall be responsible for contacting all involved utility companies for underground verification.

Standard Type 1-A Inlets are to be constructed throughout the project. Widths and lengths do vary and are noted in the chart on sht.14.

All concrete shall be standard city paving mix unless otherwise noted.

The contractor shall be responsible for any irons moved or destroyed due to construction. A Registered Land Surveyor or a Professional Engineer shall be obtained to replace any irons.

The contractor shall be responsible for the construction permits and fees required by the Kansas Turnpike Authority. Permits may be obtained by calling the K.T.A. - 682-4537.

The wire fence along the K.T.A. shall be removed and replaced in good condition. Only the minimum amount of fence necessary shall be removed and replaced. The contractor shall provide temporary fence closing every night thru out the construction period.

The K.T.A. Right of Way at the crossing and at the area North of the coll booth shall be regraded to its original slope and elevation after construction is complete in these areas. These two areas shall be fertilized, seeded, and mulched. The Engineer shall determine the extent of this work.

The tunnel liner shall be bid as L.F. Tunnel Liner and shall include all costs for completion including excavation, liner plates, sand fill, end seals, grouting, skids, bands, fittings, backfill, and compacting backfill. The storm sewer pipe installed in the tunnel will be paid seperately.

Meenah (R2560 B-2) Beehive Inlet Grates are to be substituted for the standard inlet covers at nine locations on 49th St., east of Lulu, and Victoria. The inlet tops are to set on the brick walls flush with no lateral opening, see sheet 8. The inlets will be adjusted to the proper grades when the streets are paved in the future. Presently no plans exist to pave either of these steets. Those inlets shall be bid and paid as standard "Type 1-A Beehive Drop Inlets".

Asphalt driveway to be removed on Victoria shall be replaced with the same thickness of asphalt. Contractor shall make arrangements and schedule the construction on Victoria to provide access for the two trucking companies on the west side of Victoria at all times.

Regrading the areas around the beehive drop inlets at 49th St. and Lulu is to be performed by the pavement contractor. Regrading the ditch along Victoria is to be done by the storm sewer contractor and the cost of regrading shall be considered as incidental.

Storm sewer contractor shall not begin construction until Flood Dentencion Reservoir No. 13 is under contract for construction.



CITY OF WICHITA, KS.

R. W. BRUGGEMAN ——— DIRECTOR OF ENGINEERING



DATE 1/20/

BAUGHMAN COMPANY, P.A.
SURVEYING & ENGINEERING
316/262-7271 • 330 LAURA • WICHITA, KANSAS 67211

FILMED FROM THE BEST AVAILABLE COPY

B.M. 82.58 - city Std. Disc., 2' South & 6' East of Northeast Corner of 16th & 47th St. So.
B.M. 81.76 - R.R. Spk. N. Fc. R.R. Approx. 15' South of K.T.A. R.W. & 120' East of ℄ Culv.

KANSAS TURNPIKE RIGHT—OF—WAY

Scale:
Plan: 1" = 20'
Profile: 1" = 5' - Horz.
1" = 5' - Vert.

Install 55 SY. Type 3 Rip-Rap, as indicated

Construct Reinforced Conc. Headwall See Detail Sheet No. 15

Remove & Replace 100 L.F. Wire Fence.

E. Bound K.T.A. Lanes

W. Bound K.T.A. Lanes

W. Bound Off Ramp

Highway Crossing See Detail Sht. No. 12

(X) Note - Regrade K.T.A. - R.W. area to existing condition. Seed, fertilize, and mulch disturbed areas.

Remove & Replace 100 L.F. Wire Fence.

49TH ST.

95'

Line 5

42" CI. pipe

Line 2

Line 6

Line 1

50'

PROPOSED FLOOD DETENTION RESERVOIR

Property Line

Sta. 5+26.2 - Constr. Std. Reinf. Concrete Manhole (11' x 9') See Detail Sheet No. 13 Top = 80.85 = Sta. 0+05 Line 2.

Note - See Plans for Flood Detention Reservoir #13 Proj. No. 468-Ty-245-81097-000-000-001 in conjunction w. this proj.

10'00 ± Property Line

PINEWOOD ESTATES II

Sta. 0+12.2 Equip. skids, Pipe Installation Line 1

Temp. Backfill

Existing Ground

Construct Reinf. Conc. Headwall Structure - See Sheet No. 15.

Proposed Manhole Ring 738

Proposed Bottom 66"

Install 55 SY. Type 3 Rip-Rap.

C. Bound K.T.A. Lanes

W. Bound K.T.A. Lanes

W. Bound Off Ramp

cut-off collar

Tunnel Liner

Sand Fill

Line 1

Temp. Backfill

cut-off collar

Line 1

Property Line

Sta. 5+26.2 - Constr. Std. Reinf. Conc. Manhole (11' x 9') See Detail Sheets No. 13 & 15 Top = 80.85

℄ 49TH ST. SO.

Sta. 0+12.2 Line 1

Sta. 5+26.2 Line 1

Tunnel Liner

Sand Fill

54" CMP

225 L.F. Tunnel Liner See Highway Crossing Detail Sheet No. 12

513 L.F. 53" x 89" H.E.R.C.P. @ +0.245 %

Station	0+02	0+12.2	0+60	1+00	1+50	1+85	2+00	2+50	3+00	3+50	4+00	4+10	4+50	5+00	5+26.2
	71.50 Flo.	71.50 Flo. out	71.69 Flo.	71.71 Flo.	71.84 Flo.	71.92 Flo.	71.96 Flo.	72.08 Flo.	72.20 Flo.	72.33 Flo.	72.44 Flo.	72.47 Flo.	72.59 Flo.	72.65 Flo.	72.75 Flo. adj. 73.80 Flo. in. 54" C. 73.74 Flo. in. 42" C.

LINE 1

21/20

FILMED FROM THE BEST AVAILABLE COPY....

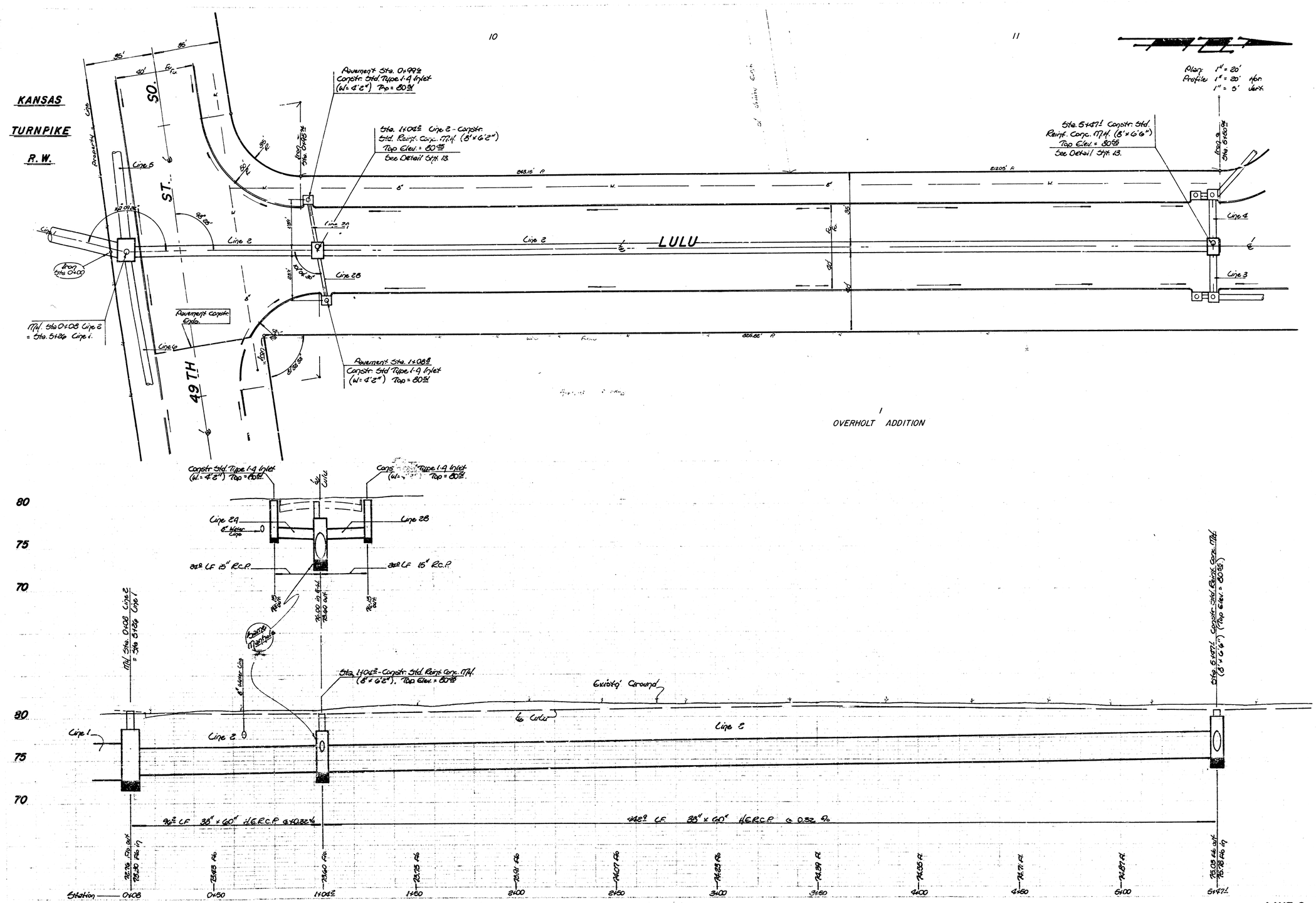

FILMED FROM THE BEST AVAILABLE COPY

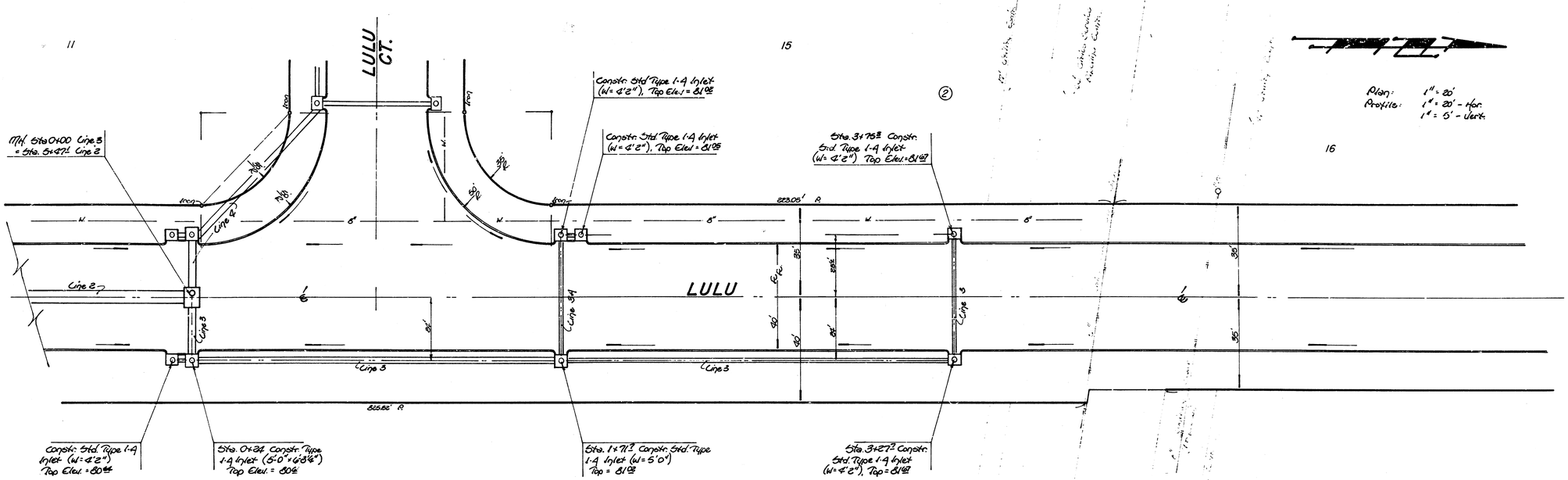
LULU CT.
LULU
Line 2
Line 3
Line 3A
Line 3
Line 3
Constr. Std. Type 1-A Inlet (W= 4'2") Top Elev.= 81.92
Constr. Std. Type 1-A Inlet (W= 4'2"), Top Elev.= 81.92
Sta. 3+75± Constr. Std. Type 1-A Inlet (W= 4'2") Top Elev.= 81.97
MH Sta 0+00 Line 3 = Sta. 5+47± Line 2
Constr: Std. Type 1-A Inlet (W= 4'2") Top Elev.= 80.42
Sta. 0+32 Constr. Type 1-A Inlet (5'0" x 6'3") Top Elev.= 80.42
Sta. 1+71± Constr. Std. Type 1-A Inlet (W= 5'0") Top = 81.92
Sta. 3+27± Constr. Std. Type 1-A Inlet (W= 4'2") Top = 81.92
223.05' R.
82.88' R.
Line 4
Line 5
Line 6
Line 7
Line 8
Line 9
Line 10
Line 11
Line 12
Line 13
Line 14
Line 15
Line 16
Line 17
Line 18
Line 19
Line 20
Line 21
Line 22
Line 23
Line

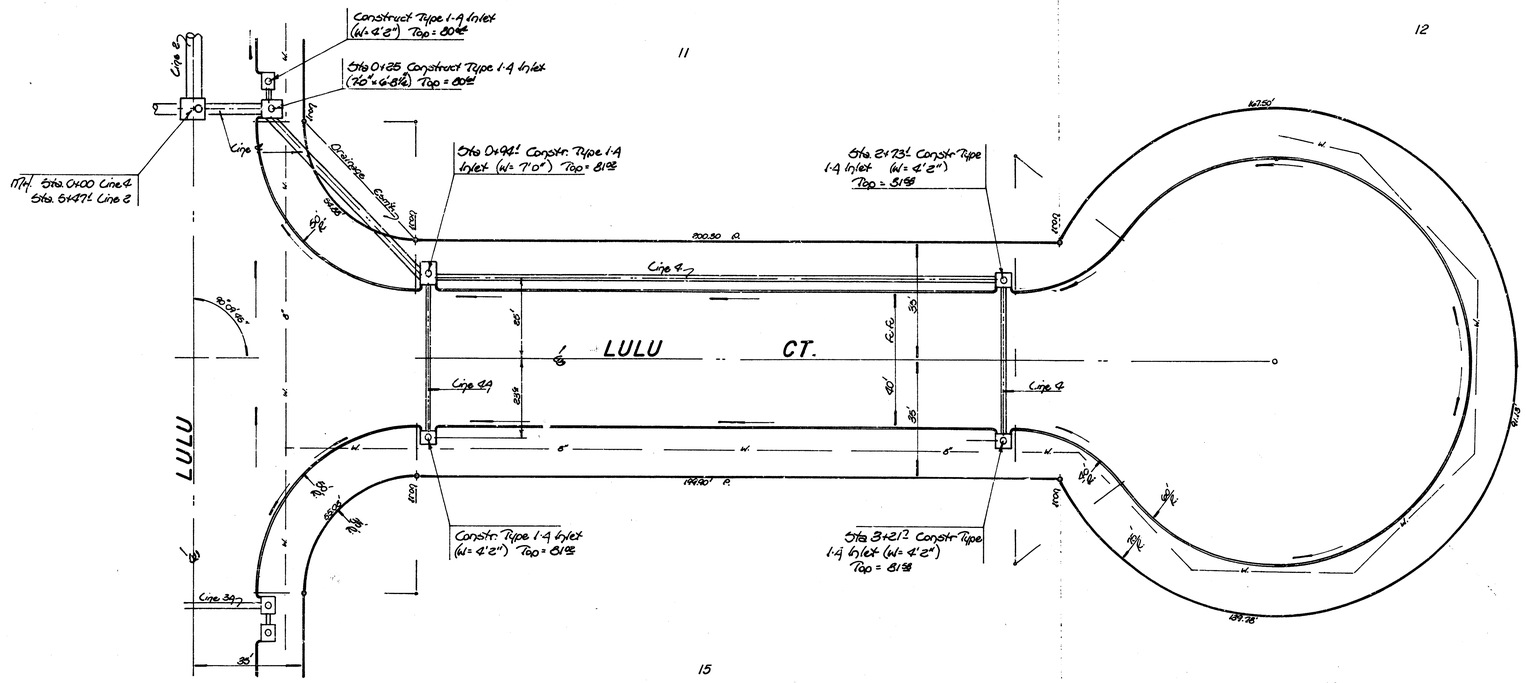

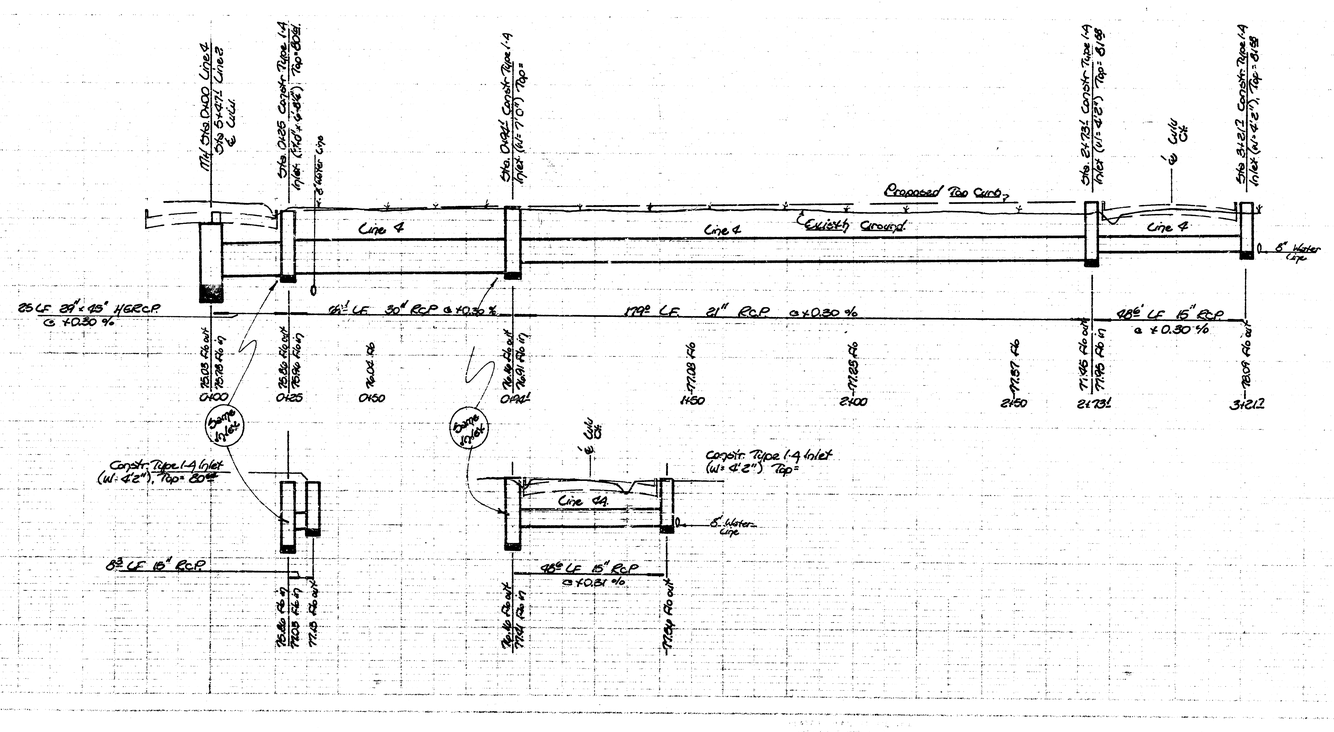

Plan 1" = 20'
Profile 1" = 20' - Hor.
1" = 5' - Vert.

5/20

LINE 4

FILMED FROM THE BEST AVAILABLE COPY

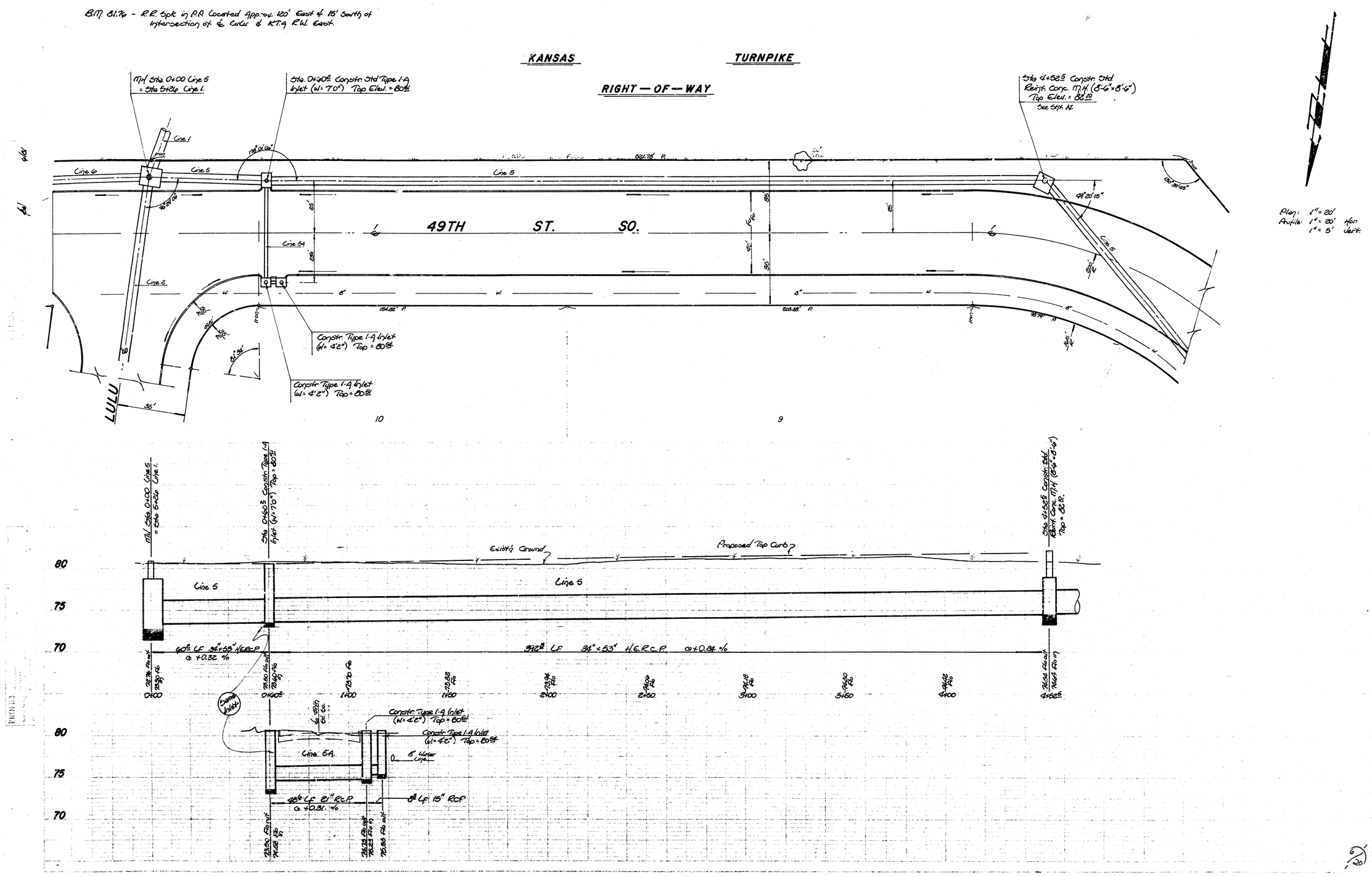

FILMED FROM THE BEST AVAILABLE COPY

KANSAS TURNPIKE **RIGHT — OF — WAY**

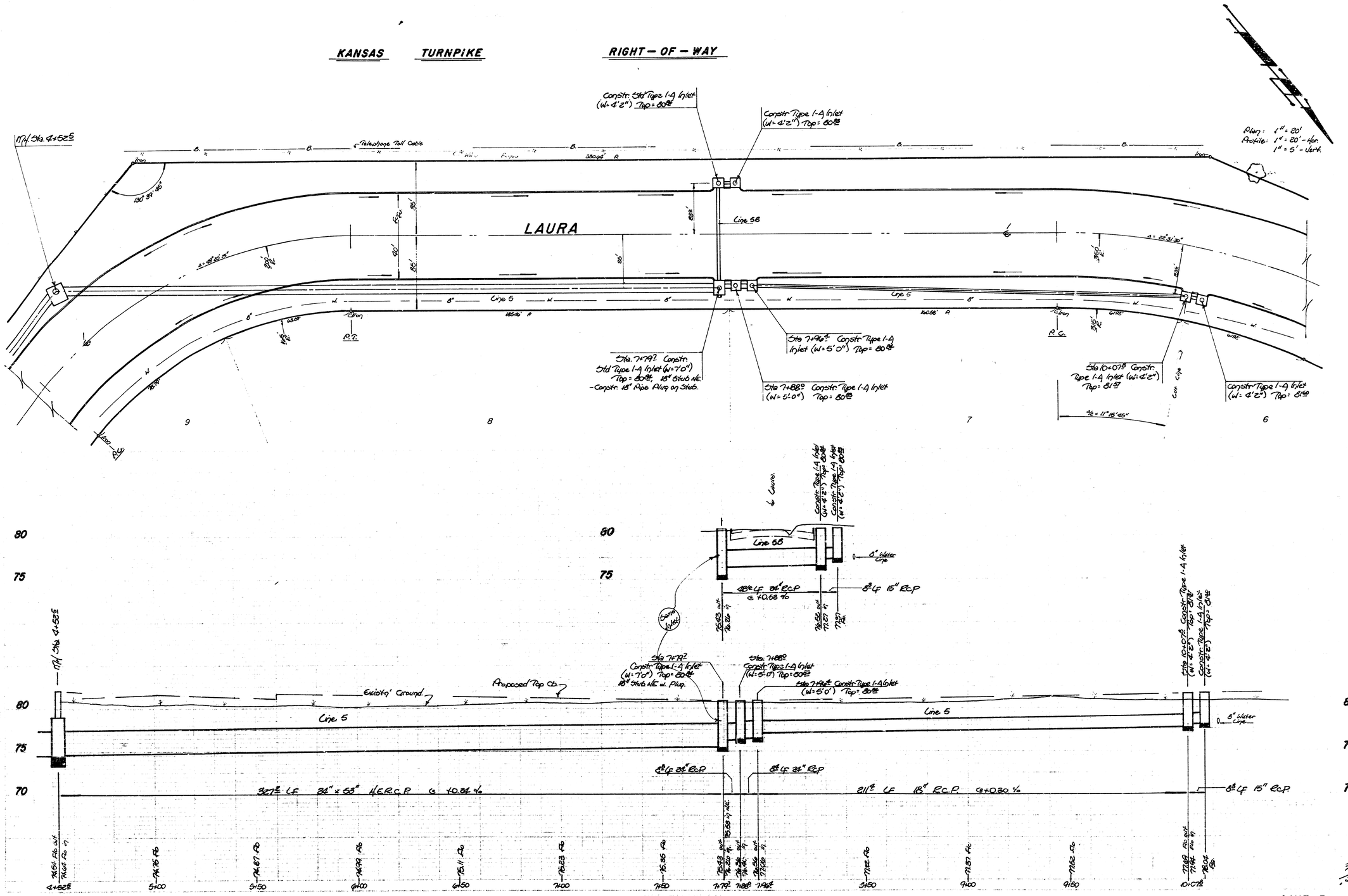

FILMED FROM THE BEST AVAILABLE COPY

LOT 1
OVERHOLT ADDITION

Scale
Plan - 1"=20'
Profile - 1"=20' Hor.
1"=5' Vert.

LINE 2

LULU

35'

40'

Constr (2)-Std. Type 1-A Inlets (W= 4'-2") w. Beehive Covers. Top Elev.=??@

Note - Install Beehive Inlet Covers (Neenah R2560 C-2 or equal) at these 3 inlet locations in the place of standard covers. At the time 49th is paved, the beehive covers will be Removed and Replaced w. Std. Inlet covers, and the Inlets Raised to Proper Grade

Property Line

566.28' R

49TH ST. SO.

Curb Line

Pavmt Ending

Line GA

80°00'50"

F.G. 35'

25'

80' 35'

LINE 5

LINE 6

Property Line

79°28'10"

Sta. 0+78.1 - Constr. Std. Type 1-A Inlet w. Beehive Cover (W= 7'0") Top Elev.=??@

LINE 1

KANSAS TURNPIKE

Area to be Regraded "By Others" at Time of Pavement Construction.

Neenah (R2560-C2) or equal Beehive Inlet Cover to be installed in place of Standard Cover.

Top Elev.

Contractor to construct planking or extra brick or both on face of inlet to eliminate any lateral opening. Cost of planking or brick to be incidental to inlet.

Inlet frame to be Western Iron & Foundry Co., Inc. or equal as follows:
Frame 524-C6
Frame (Lift) 500-A1

DETAIL TYPE I-A BEEHIVE DROP INLET

Constr. Std. Type 1-A Inlet (W= 4'-2") Top El. ??@ w. Beehive Cover

Constr. Std. Type 1-A Inlet (W= 4'-2") Top El. ??@ w. Beehive Cover

E. 49th St. So.

Line GA

80

75

70

Same as Inlet

30⅝ LF 24" RCP @ +0.85%

8³ LF 15" RCP

??.10 Fb out
??.82 Fb in

??.83 Fb out
??.68 Fb in

??.28 Fb out

Proposed future Ch.

Existing Ground

Line 6

78¹ LF 39"x 46" HERCP @ +0.57%

56³⅜ LF 34"x 53" H.E.R.C.P. @ +0.25%

??.78 Fb out
??.76 Fb in

??.98 Fb

??.10 Fb out
??.80 Fb in

??.25

??.38 Fl

??.60 Fl

??.65 Fl

??.75 Fl

??.65 Fl

??.00 Fl

??.13 Fl

??.26 Fl

??.38 Fl

Station 0+00 0+50 0+78.1 1+00 1+50 2+00 2+50 3+00 3+50 4+00 4+50 5+00 5+50

Sta. 0+00 Line 6 = Sta 5+26 Line 1

??? Sta. 0+00 Line 6 = Sta ??? Line 1

LINE 6

LINE 1

FILMED FROM THE BEST AVAILABLE COPY

TURNPIKE

KANSAS

49TH ST.

VICTORIA

LOT 1
OVERHOLT ADDN.

Scale
Plan - 1"= 20'
Profile - 1"= 5' Vert.

Sta. 7+35.2 - Constr.
Std. Type 1-A Inlet w. Beehive Cover
(W = 6'-0") Top = 79.39

Sta. 7+93.6 - Constr.
Std. Type 1-A Inlet w. Beehive Cover
(W = 4'-2") Top = 79.32

Sta. 8+83.6 - Constr.
Std. Type 1-A Inlet w. Beehive Cover
(W = 4'-2") Top = 79.25

Sta. 12+22.0 - Constr.
Std. Type 1-A Inlet w. Beehive Cover
(W = 4'-2") Top = 80.25

Sta. 12+13.6 - Constr.
Std. Type 1-A Inlet w. Beehive Cover
(W = 4'-2") Top = 80.25

Note - Contractor to make arrangements to provide access to Trucking companies thru out construction at these two locations.

Sta. 6+91.7 - Constr.
Std. Type 1-A Inlet w. Beehive Cover
(W = 6'-0") Top = 80.62

Remove & Replace 85 Sy. Asph. Mat.
Remove 68 Lf. Pipe. Do not replace pipe

(8) - Contractor to Regrade Ditches to Drain to Inlets. Engineer to determine amount of Regrading to be done. Regrading to be Incidental to Cost of Lf. Pipe.

Note — Install Beehive Inlet Covers (Neenah R2560-E2 or equal) at these 6 inlet locations in place of the Standard covers. Inlet elevations are a temporary situation. At the time Victoria & 49th St. are paved, the beehive covers will be removed & the inlets raised to proposed street grades.

— See Sheet 8 for Beehive Type 1-A Inlet Detail. —

Remove & Replace 21 Sy. Asph. Mat.
Remove 42 Lf. Pipe. Do not replace Pipe

Property Line
Property Line
644.21' R.
8" Gas Line
8" Ves. 8" Water Line
40' R.O.W.
30'
38.5'
38.5'
38.5'
92°27'58"
35'
35'
25'
60' R/W
Iron
Ball Line
Ball Line

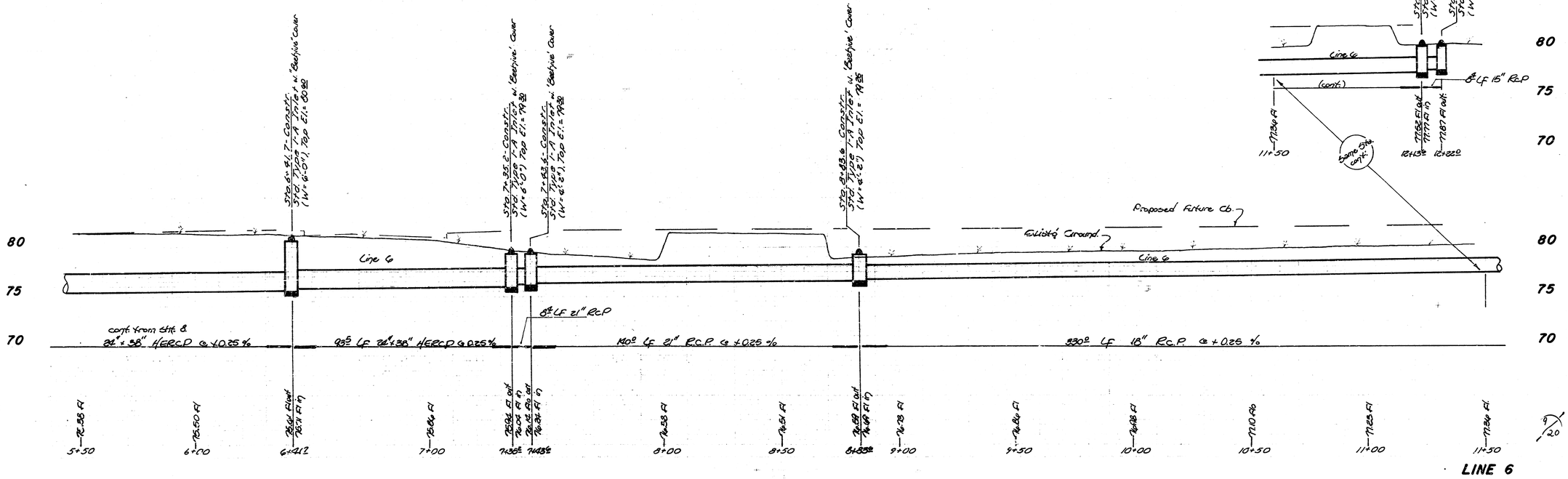

LINE 6

9/20

FILMED FROM THE BEST AVAILABLE COPY....

B.M.: 82.53 - City of Wichita Std. Disc. 2' South & 6' East. N.E. Corner 27th St. So. & 106.

(5) Note - Regrade R.T.A. - R.W. to existg condition. Seed, Fertilize, and mulch disturbed area.

Sta. 0+71.2 Install End Section & Begin Pipe Installation.

Property Line

City Service Easement

40' Pipeline Easement

307.76'

20" CWS Pipe Line

Sta. 2+54.5 Constr. Type 1-A Inlet (4'-2" x 4'-8½") Top Elev. = 82.78

16' Utility Easement

N 26°58'40" E

Line 7

17' Utility & Drainage Easement

Sta. 1+60.8 Construct Std. Reinf. Conc. Mfd. w/ Beehive Inlet Cover. (7'-0" x 4'-6") Top Elev. = 81.90 See Detail Sht. #14.

(1)

Remove & Replace 30 Lf. of Wire Fence for Constr.

Construct 180 SY. 5" Concrete Ditch Lining See Sht. No. 11 for Detail.

Property Line

Bell Tele. Cable

KANSAS TURNPIKE RIGHT-OF-WAY

Note - Contact Bell Telephone Co. for raising or lowering of Tell Cable. This line must be kept in operation at all times.

Sta. 4+54.5 Constr. (2) Std. Type 1-A Inlets (w1 4'-2")

Pavement Sta. 18+66.38

(2)

Sta. 5+01.5 Constr. (3) Std. Type 1-A Inlets (w = 4'-2").

LAURA

Scale
Plan — 1" = 20'
Profile — 1" = 20' — Hor.
1" = 5' — Vert.

Note - Pipe End Section to be considered as Incidental to LF Pipe.

Sta. 0+71 - Install End Section & Begin Pipe Installation

Telephone Tell Cable Sta. 1+00 Approx.

Sta. 1+60.8 Construct Std. Reinf. Conc. Mfd. w/ Beehive Inlet Cover. (7'-0" x 4'-6") Top Elev. = 81.90 See Detail Sht. #14

Install Neenah Beehive Grate & Frame (R-2560-E2)

Existing Ground

Line 7

89 L.F. - 84" x 45" H.E.R.C.P. @ +0.200 %

893 L.F. - 84" x 45" H.E.R.C.P. @ +0.800 %

87 L.F. - 24" R.C.P. @ +0.420 %

Install (2) - 8 L.F. Each of 15" R.C.P.

Constr. Type 1-A Inlet (w1 4'-2") Top = 82.78

Constr. Type 1-A Inlet (w1 4'-2") Top = 82.27

Existing Ground

Install (2) - 8 L.F. Each of 15" R.C.P.

Constr. Type 1-A Inlet (w1 4'-2") Top = 82.78

Constr. Type 1-A Inlet (w1 4'-2") Top = 82.27

Sta. 4+54.5 Constr. Type 1-A Inlet (4'-2" x 4'-8½") Top Elev. = 82.78

d' Sanitary Sewer

Laura

Sta. 5+01.5 Constr. Std. Type 1-A Inlet (w1 4'-2") Top = 82.78

6" Water Line

Station 0+71 1+00 1+60.8 2+00 2+50 3+00 3+50 4+00 4+54.5 5+01.5

85 80 75

LINE · 7

FILMED FROM THE BEST AVAILABLE COPY

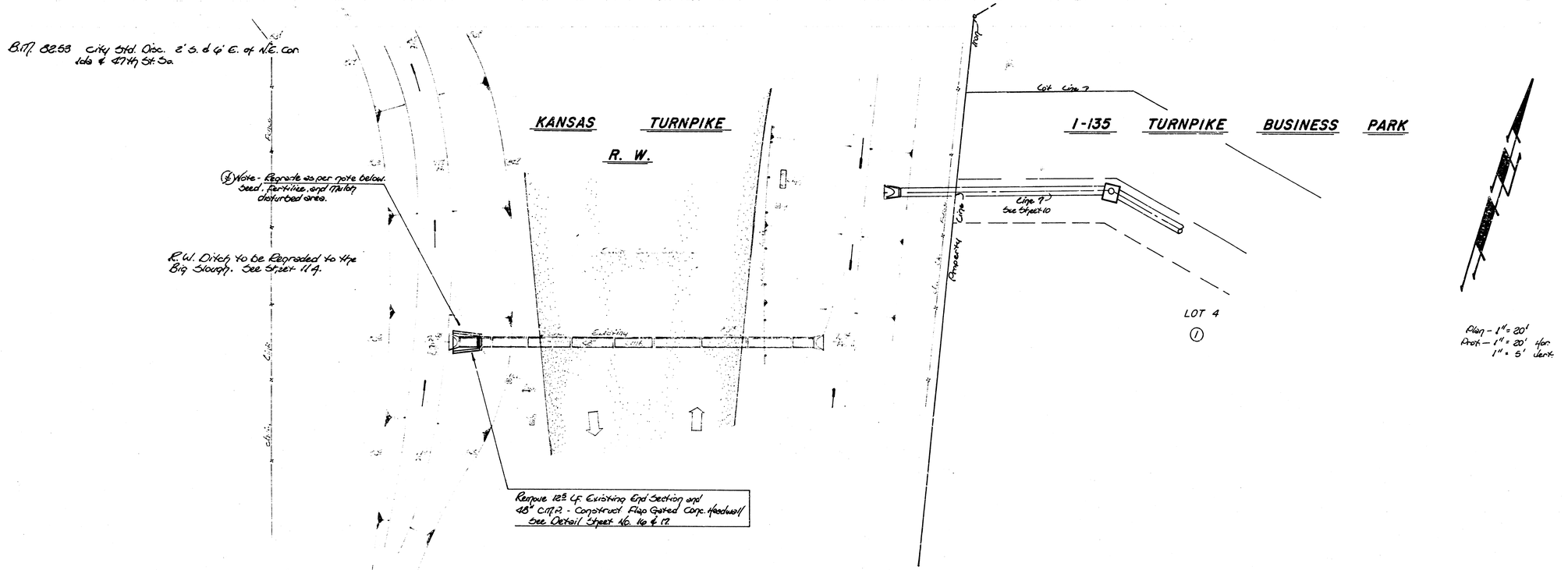

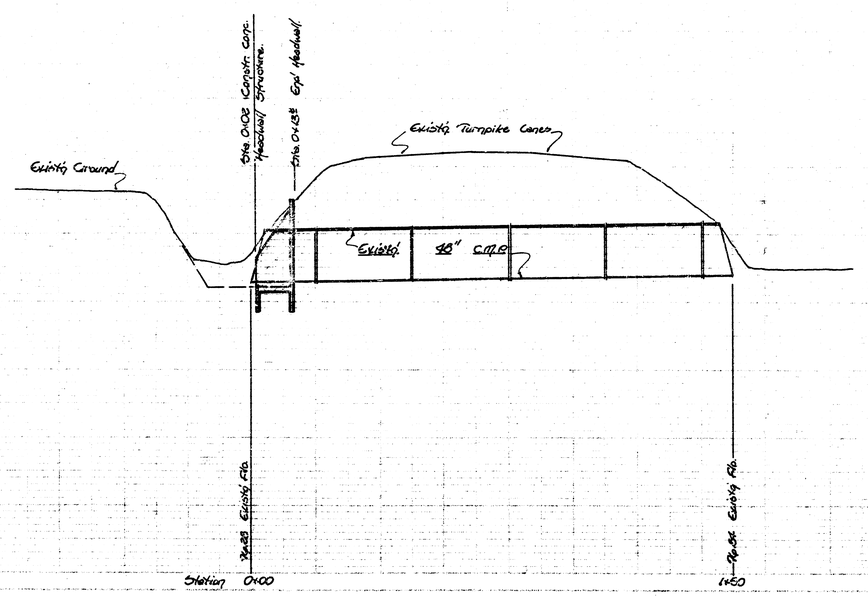

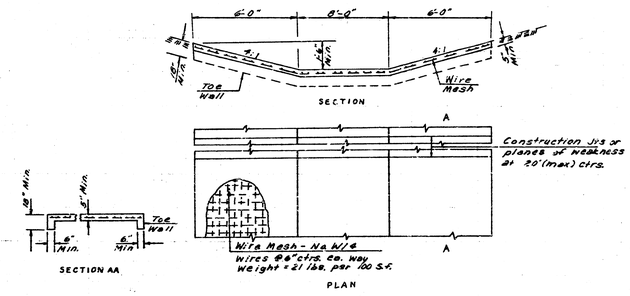

CONCRETE DITCH LINING DETAILS

FLAP GATED HEADWALL

11/20

FILMED FROM THE BEST

B.M. 82.53 City Std Disc. 2'S. & 6' E. of N.E. Corner 106 & 47th St. So.

KANSAS TURNPIKE AUTHORITY

R. W.

Scale - 1" = 40' Plan
1" = 40' Profile-Hor.
1" = 5' - Vert.

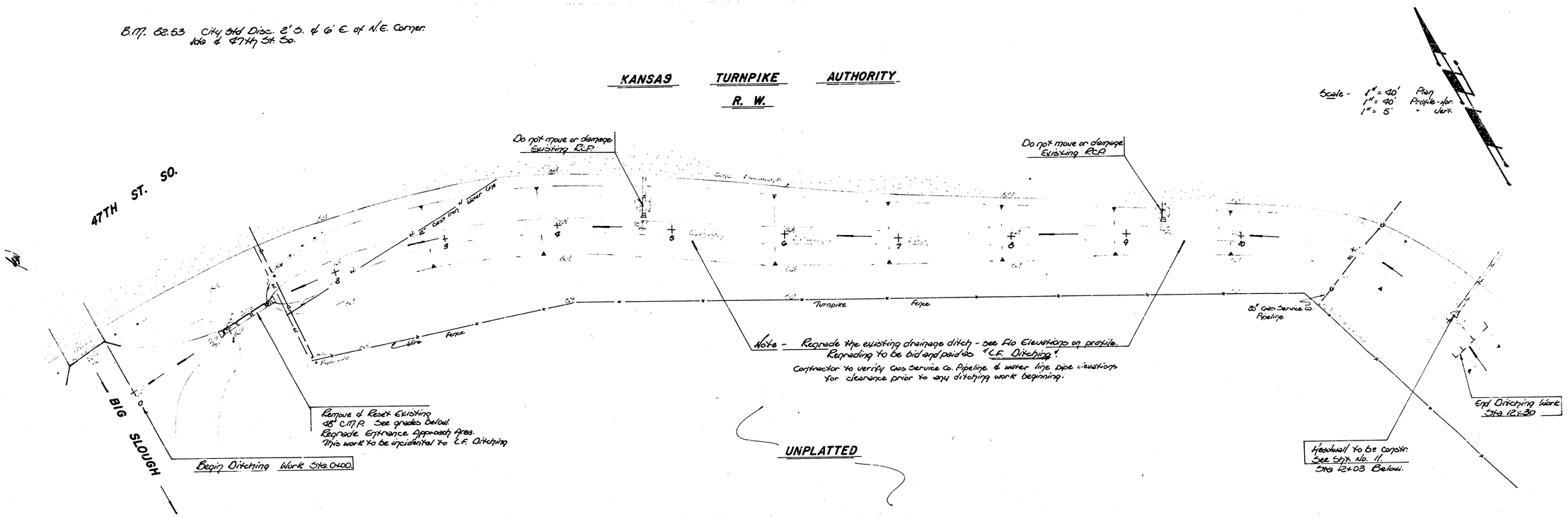

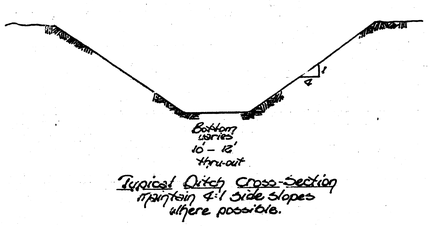

Typical Ditch Cross-Section
maintain 4:1 Side Slopes where possible.

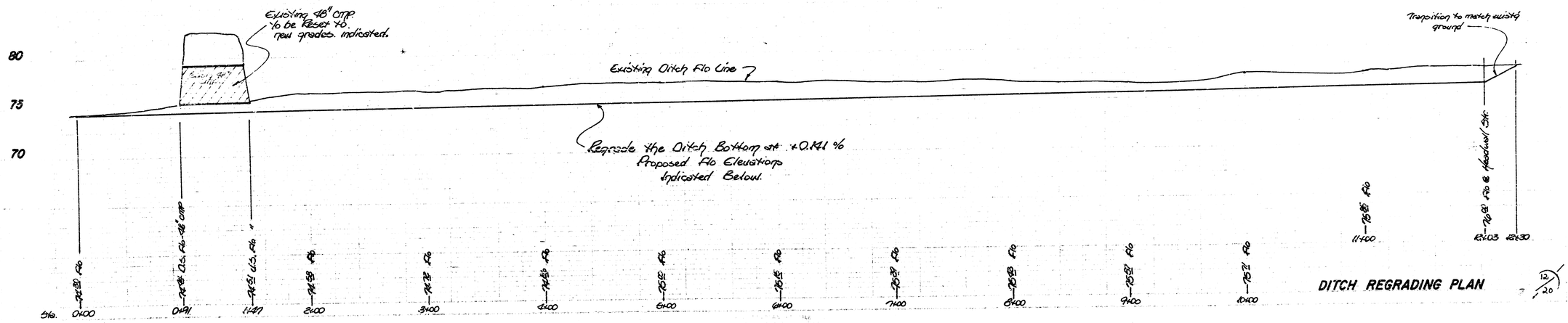

DITCH REGRADING PLAN

12
20

FILMED FROM THE BEST AVAILABLE COPY ....

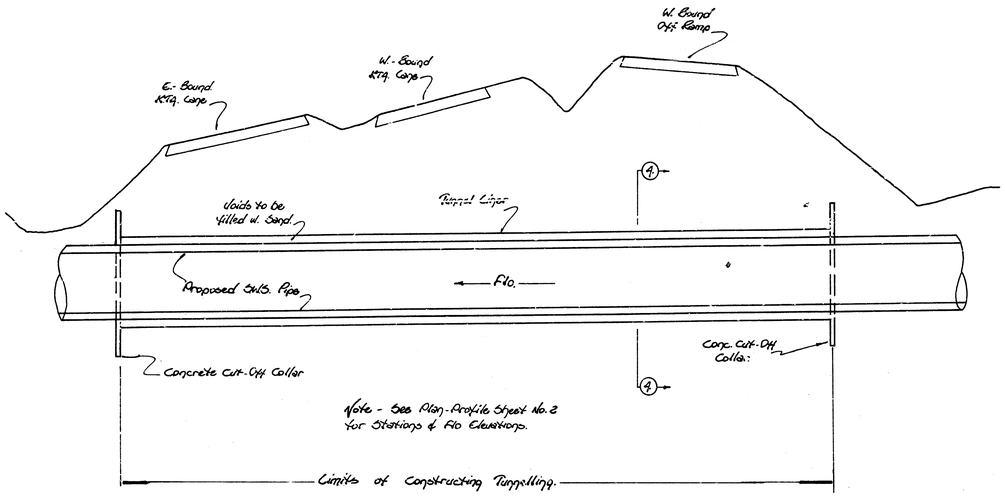

— CROSSING PROFILE —

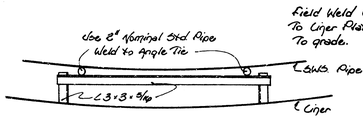

— RAIL ASSEMBLY —

Note - Tunnel Contractor may propose an alternate rail assembly to the sizes noted above. Proposal shall provide the same grade consistency for the Storm Sewer Pipe & be presented to the Engineer for Approval.

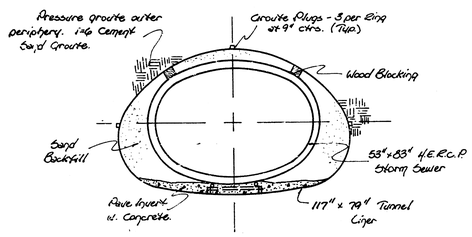

SECTION A.- A.
(H.E.R.C.P.)

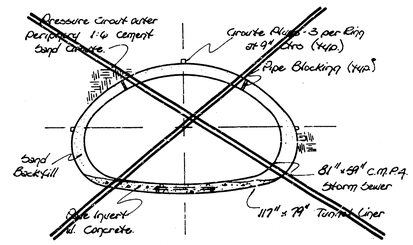

~~SECTION A.- A.~~
~~(C.M.P.A. - FULLY PAVED)~~

Note - Tunnel Liner to be Arch Liner Plate Construction, Thickness = 10 gauge (0.1345 in.) with Section Properties = 0.059 $in^3/in.$

PIPE ENCASEMENT DETAILS

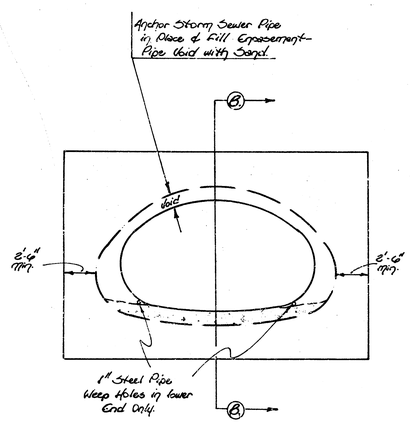

— END SECTION —

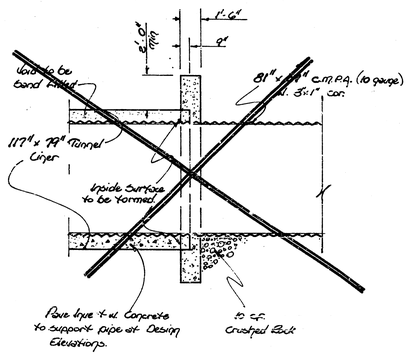

~~SECTION B-B~~
~~(C.M.P.A. - FULLY PAVED)~~

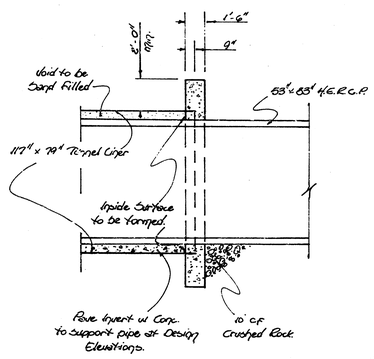

SECTION B-B
(H.E.R.C.P.)

CONCRETE CUT-OFF COLLAR DETAILS

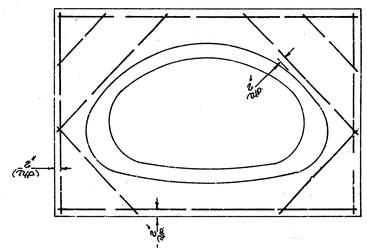

— INSIDE FACE —

COLLAR REINFORCING

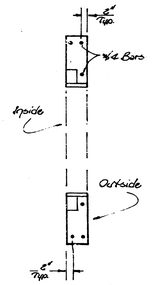

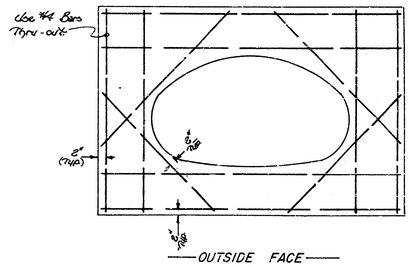

— OUTSIDE FACE —

HIGHWAY CROSSING DETAILS

13/20

FILMED FROM THE BEST AVAILABLE COPY ....

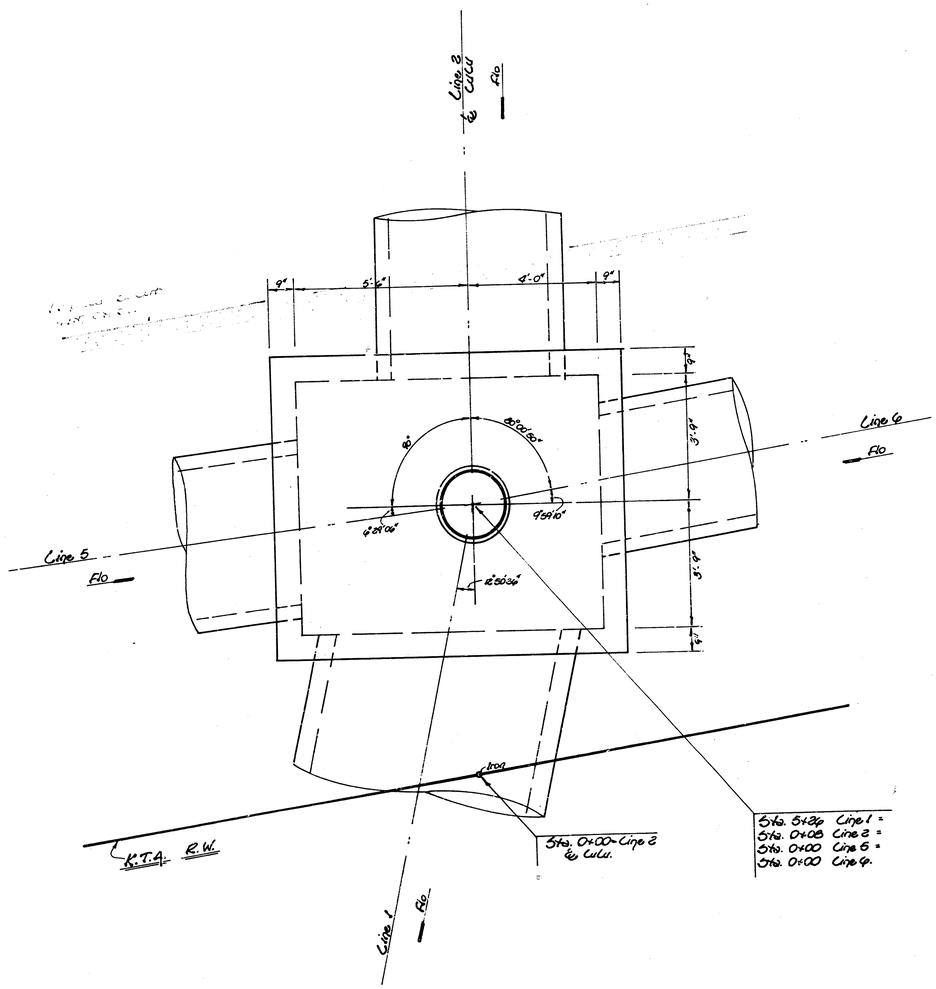

TOP VIEW
(1" = 2')

Note - See Plan - Profile Sheets for Pipe Size & Elevations.
See Std. Reinforced Concrete MH. Detail Sheet for
Reinforcing Design. (Depth of Stack = 0'-3.33").

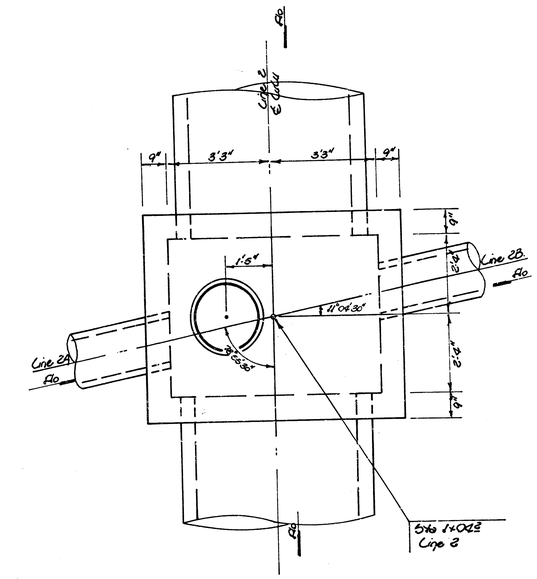

Note - The Manhole Brick Stock is to be constructed
off of ℄ as far West as possible (indicated by dimension)
for these two Manhole locations on Culv.

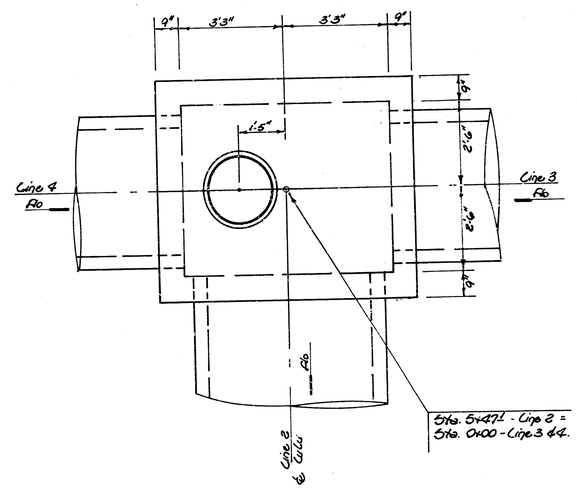

MANHOLE ALIGNMENT & DIMENSION 14/20

FILMED FROM THE BEST
AVAILABLE COPY

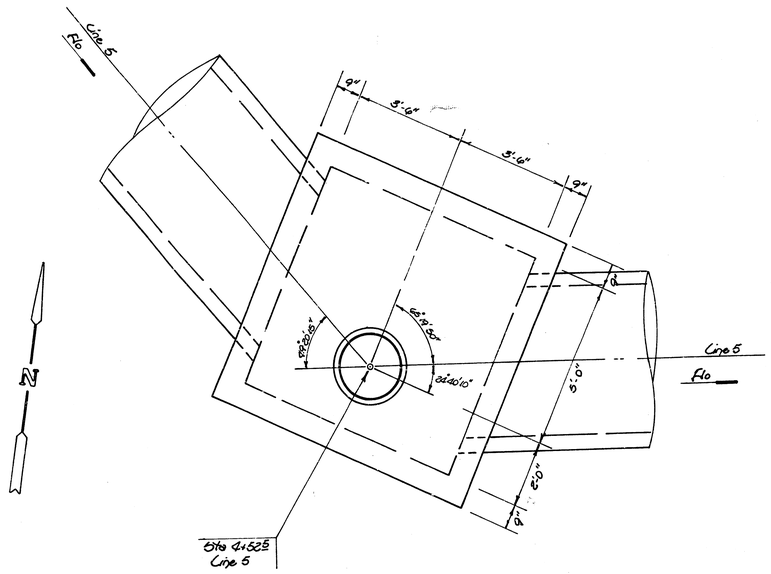

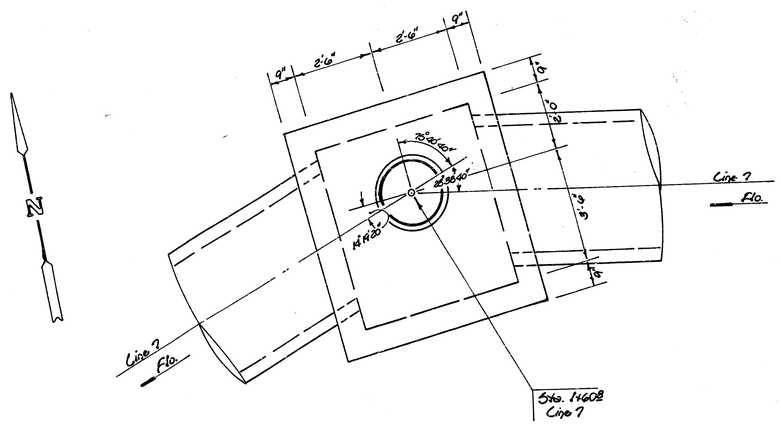

MANHOLE & INLET LOCATION & DIMENSION

Line No.	Manhole Sta.	Manhole Dimension	Inlet Sta.	Inlet Dimension (W x L)
1	5+26	11'-0" x 4'-0"		
2	1+04	8'-0" x 6'-2"		
2A			0+24	4'-2"
2B			0+24	4'-2"
2	5+47	8'-0" x 6'-6"		
3			0+24	5'-0" x 6'-8½"
"			"	4'-2"
3			1+77	8'-0"
3			3+27	4'-2"
3			3+75	4'-2"
3			0+47	4'-2"
3A			"	4'-2"
"			0+25	7'-0" x 6'-8½"
4			"	4'-2"
"			0+92	7'-0"
4			2+73	4'-2"
4			3+21	4'-2"
4			0+48	4'-2"
4A			0+60	7'-0"
5				
5	4+52	8'-6" x 8'-6"		
5			7+77	7'-0"
5			7+88	5'-0"
5			7+96	5'-0"
5			10+07	4'-2"
"			"	4'-2"
"			0+48	4'-2"
5A			"	4'-2"
"			0+48	4'-2"
5B			"	4'-2"
"			0+78	7'-0"
6			6+42	6'-0"
6			7+35	6'-0"
6			7+43	4'-2"
6			8+83	4'-2"
6			12+13	4'-2"
6			12+22	4'-2"
6			0+48	4'-2"
6A			"	4'-2"
"				
7	14+60	7'-0" x 6'-6"		
7			4+54	4'-2" x 6'-8½"
"			"	4'-2"
"			"	4'-2"
"			5+01	4'-2"
7			"	4'-2"
"			"	4'-2"
"			"	4'-2"

Note -

All Manholes to be Standard Reinforced Concrete Manholes. See Detail Sheet No. 18 for Reinforcing Design. Widths, Lengths, and Alignment for the MH's are indicated on Sheet No. 13 & 14.
Manhole concrete to be Standard Paving Mix.
Floors of the Manholes are to be shaped & smooth.
All Inlets are to be Standard Type 1-A Inlet Construction (See Detail Sheet No. 19)
Length = 5'-8½" unless otherwise indicated, and then the length shall be 6'-8½".
Widths vary in relation to the pipe sizes and are indicated in the table above.

15/20

FILMED FROM THE BEST AVAILABLE COPY ....

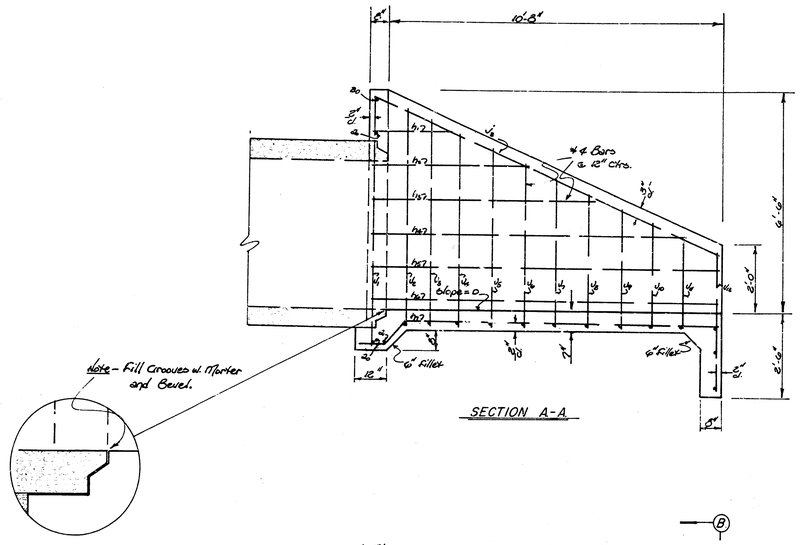

SECTION A-A

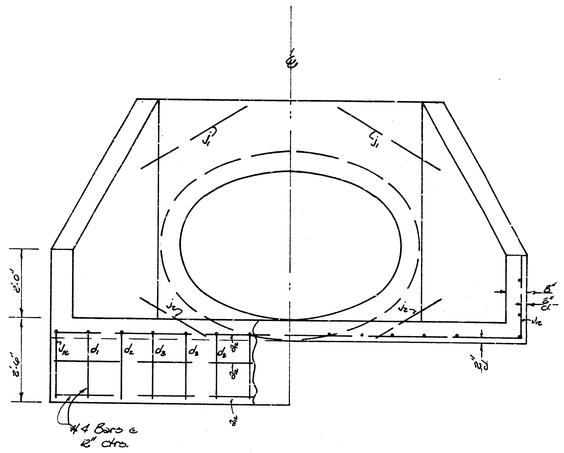

SECTION B-B

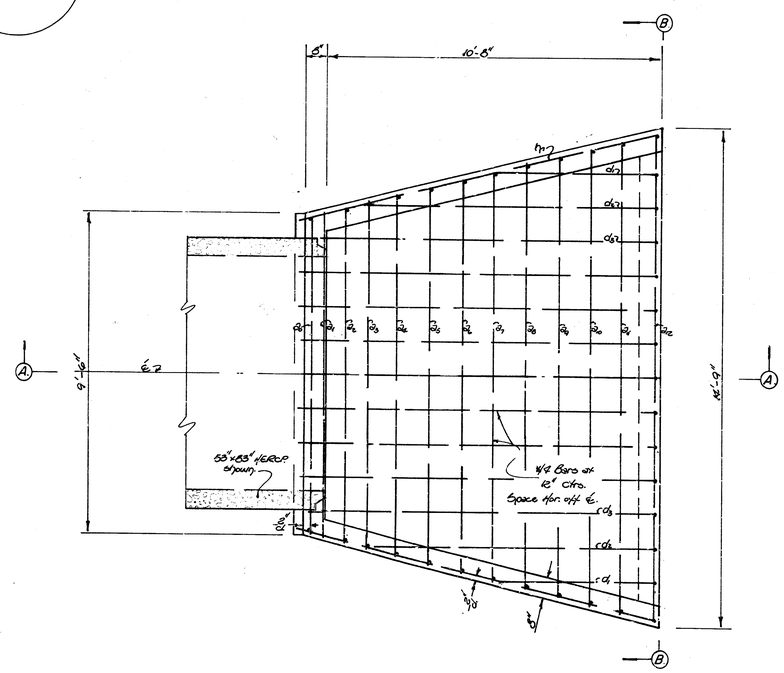

PLAN VIEW
1" = 2'

LISTING OF BARS, DIMENSIONS, & QUANTITIES.

Bar	Number	Length	Weight
a_0	3	9'-2"	18.36 lb.
a_1	1	9'-4"	6.23
a_2	1	9'-7"	6.40
a_3	1	10'-1"	6.75
a_4	1	10'-7"	7.07
a_5	1	11'-1"	7.40
a_6	1	11'-6"	7.68
a_7	1	11'-11"	7.96
a_8	1	12'-5"	8.29
a_9	1	12'-10"	8.57
a_{10}	1	13'-4"	8.90
a_{11}	1	13'-9"	9.19
a_{12}	3	14'-3"	28.56
k_1	2	9'-2"	12.26
d_1	2	6'-8"	8.91
d_2	2	11'-0"	14.70
d_3	9	13'-4"	80.16
j_1	2	3'-9"	5.01
j_2	2	2'-6"	3.34
j_3	2	12'-2"	16.25

Bar	Number	Length	Weight
h_1	2	2'-8"	3.56 lb.
h_2	2	5'-1"	6.79
h_3	2	7'-5"	9.90
h_4	2	9'-10"	13.13
h_5	2	11'-0"	14.70
h_6	2	11'-0"	14.70
h_7	2	12'-1"	16.14
v_1	2	7'-6"	10.02
v_2	2	6'-6"	8.68
v_3	2	6'-1"	8.12
v_4	2	5'-8"	7.57
v_5	2	5'-2"	6.90
v_6	2	4'-9"	6.35
v_7	2	4'-4"	5.78
v_8	2	3'-11"	5.23
v_9	2	3'-6"	4.68
v_{10}	2	3'-1"	4.12
v_{11}	2	2'-8"	3.56
v_{12}	2	2'-2"	5.57

Total Reinforcing Steel = 427.4 lb.
" Concrete = 7.8 cy.

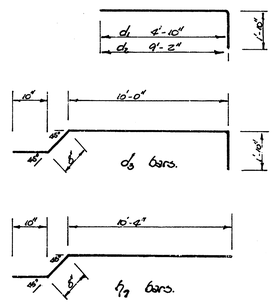

BENDING DIAGRAM

Note -

All Reinforcing Bars to be 1/2" ϕ.
All Bars are straight, except those shown in the bending diagrams.
All Edges to have 1/2" beveled edges. Contractor to fill any grooves with mortar and bevel finish.
All Reinforcement (horizontal) to be supported on metal supports or spacers. The Engineer to approve all supports and ties made.
Class A Concrete to be used thru out.

CONCRETE HEADWALL DETAIL

16/20

FILMED FROM THE BEST AVAILABLE COPY....

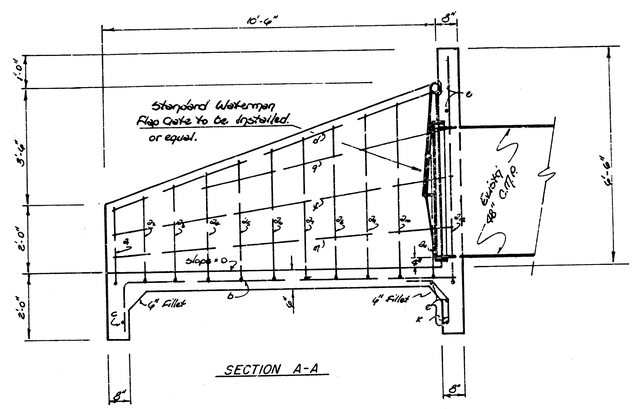

SECTION A-A

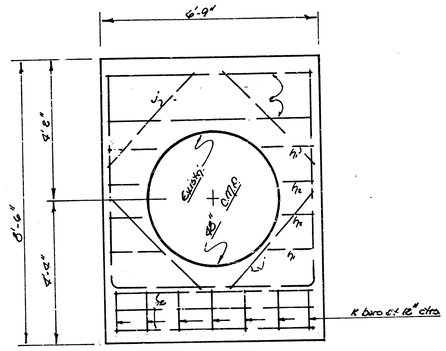

SECTION B-B

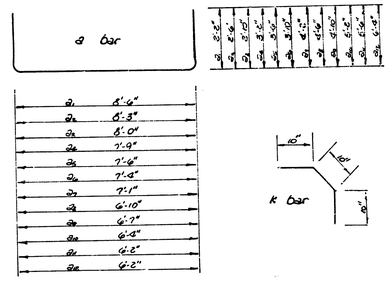

BENDING DIAGRAMS

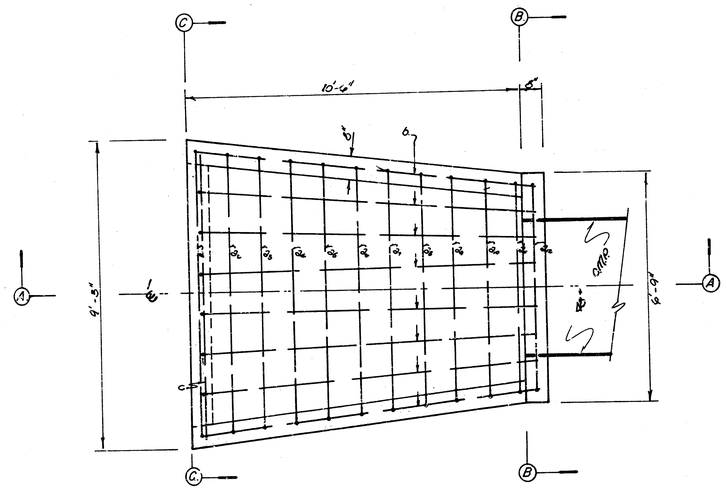

PLAN VIEW
1" = 2'

LISTING OF BARS, DIMENSIONS, & QUANTITIES.

Bar	Number	Length	Shape	Weight
a_1	1	10'-10"		8.50 lb.
a_2	1	13'-3"		8.85
a_3	1	13'-8"		9.13
a_4	1	14'-1"		9.41
a_5	1	14'-6"		9.68
a_6	1	15'-0"		10.02
a_7	1	15'-5"		10.30
a_8	1	15'-10"		10.67
a_9	1	16'-3"		10.86
a_{10}	1	16'-8"		11.14
a_{11}	1	17'-2"		11.47
a_{12}	1	18'-10"		12.67
b	8	11'-9"		62.79
c	1	8'-6"		5.67
d	2	11'-6"		15.36
e	5	6'-5"		21.46
f	2	10'-9"		14.36
g	2	8'-0"		10.68
m	2	10'-8"		14.26
h_1	4	1'-6"		4.01
h_2	4	1'-0"		2.67
j	4	4'-0"		10.68
k	7	2'-6"		11.68
Total Reinforcing Steel				384.2 lb.
" Concrete				5.4 c.y.

Bars to be #4 thruout.

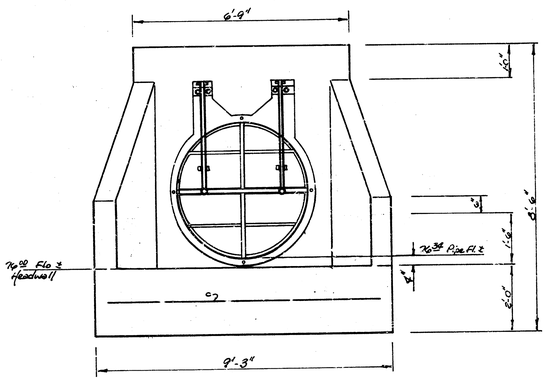

SECTION C-C

Note—
All Reinforcing Bars to be ½" ϕ.
All Edges to have ½" beveled edges.
Waterman supplied Flap Gate to be installed or equal.
Class A Concrete to be used.
Use a Typical 2" clearance for all bars.

FLAP GATE HEADWALL DETAIL.

17/20

FILMED FROM THE BEST AVAILABLE COPY....

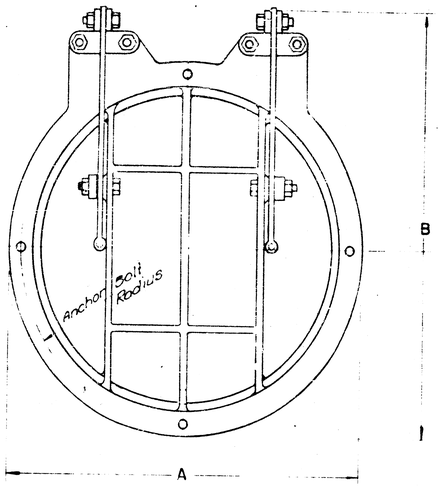

ELEVATION

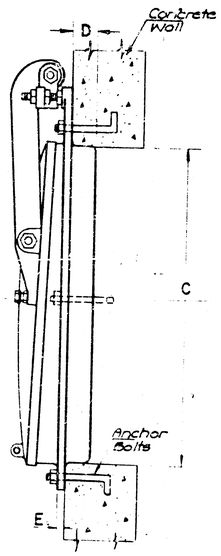

SIDE VIEW & SECTION
THRU CONCRETE WALL
SPIGOT BACK

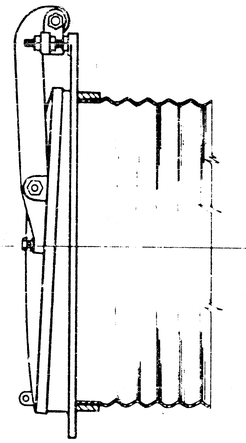

SIDE VIEW & SECTION
THRU CORRUGATED METAL PIPE
SPIGOT BACK

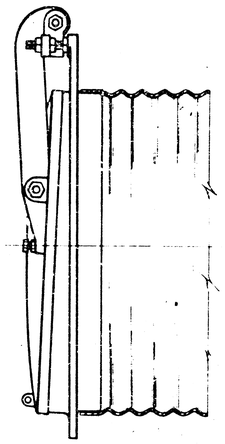

SIDE VIEW & SECTION
THRU CORRUGATED METAL PIPE
SPIGOT BACK

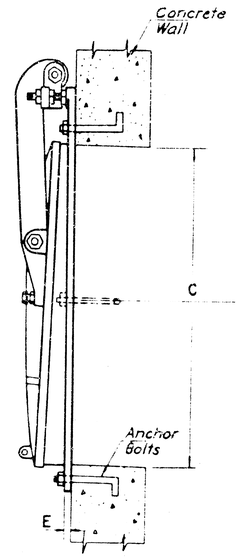

SIDE VIEW & SECTION
THRU CONCRETE WALL
FLAT BACK

FLAT BACK & SPIGOT BACK CAST IRON FRAME AND GATE

INSTALLATION WITH CONCRETE WALL
& ATTACHED TO CORRUGATED METAL PIPE

Gate Size Diameter	A	B	C	D	E	Weight in Pound	Anchor Bolts Diam.	Anchor Bolts Projection	Radius
8"	13½"	14½"	9¼"	2"	½"	50	⅝"	1¾"	5¾"
10"	16"	16½"	11"	2"	½"	60	⅝"	1¾"	7⅛"
12"	19"	18½"	13"	2"	½"	85	⅝"	1⅞"	8½"
15"	22½"	23¾"	15¾"	2"	⅝"	140	¾"	2⅛"	10"
18"	24¾"	28¼"	19"	2"	⅝"	165	¾"	2⅛"	11⅜"
21"	28"	30½"	22¾"	2"	¾"	225	¾"	2⅛"	13"
24"	32"	35¼"	26"	2½"	¾"	330	¾"	2⅛"	14½"
30"	37"	40"	31½"	2½"	¾"	425	¾"	2½"	17½"
36"	44"	49½"	37½"	3"	⅞"	605	⅞"	2⅝"	20½"
42"	50¾"	58"	43½"	3½"	1"	780	⅞"	2⅝"	24"
48"	54½"	63⅜"	49⅞"	3"	⅝"	750	⅝"	2"	19⅝"
54"	64½"	72"	55¾"	4"	1"	1395	⅞"	2⅝"	30"
60"	69"	80½"	62"	4"	1⅛"	1710	1"	3"	33"
66"	80"	90	68½"	4"	1¼"	2685	1"	3⅛"	33"
72"	82"	95¼"	74½"	4"	1½"	2950	1"	3⅛"	39⅝"
84"	100"	112¼"	86½"	4"	2"	5500	1⅛"	4⅛"	42⅜"

NOTE: Automatic flap gates shall conform to the dimensions and approximate weights shown in the tables. The gate shall be installed in accordance with the manufacturers' recommendations.

When no water is against the face of the gate, the flap shall seat on the finished frame. Seating surfaces of both frame and flap shall be cast iron and machined to a close fit.

The gate flap, frame and links shall be cast iron. Anchor bolts, assembly bolts and nuts shall be galvanized steel.

The gate is designed to withstand a maximum operating head of Ten (10) feet on the check side, measured from the center line of the gate to the high water level.

The illustrations, notes and table of dimensions shown are for Armco Model 20C, however, a Standard Waterman Model F-10 Flap Gate or equal may be used.

AUTOMATIC FLAP GATE

18/20

FILMED FROM THE BEST AVAILABLE COPY

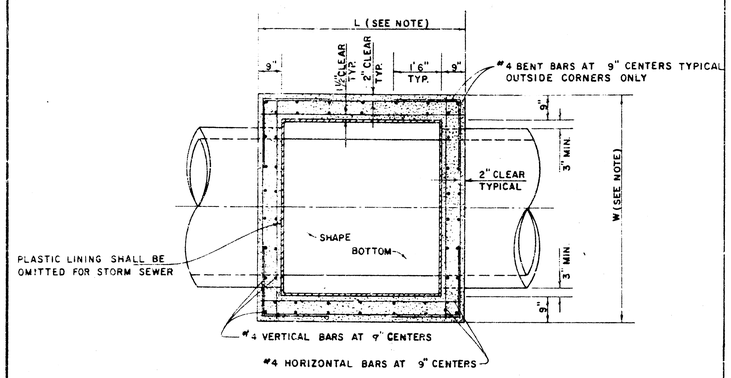

TOP VIEW

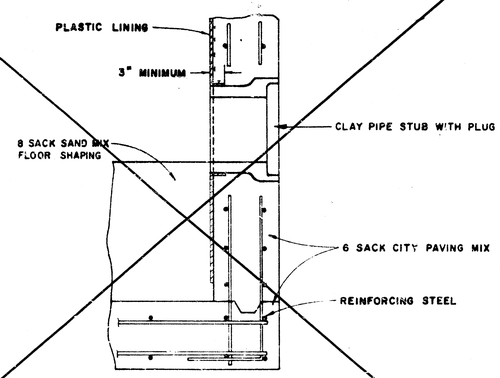

V. C. P. CONNECTION DETAIL
SANITARY SEWER ONLY

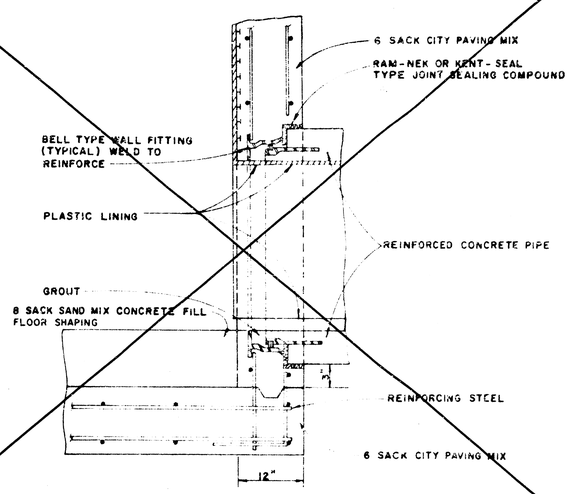

R. C. P. CONNECTION DETAIL
SANITARY SEWER ONLY

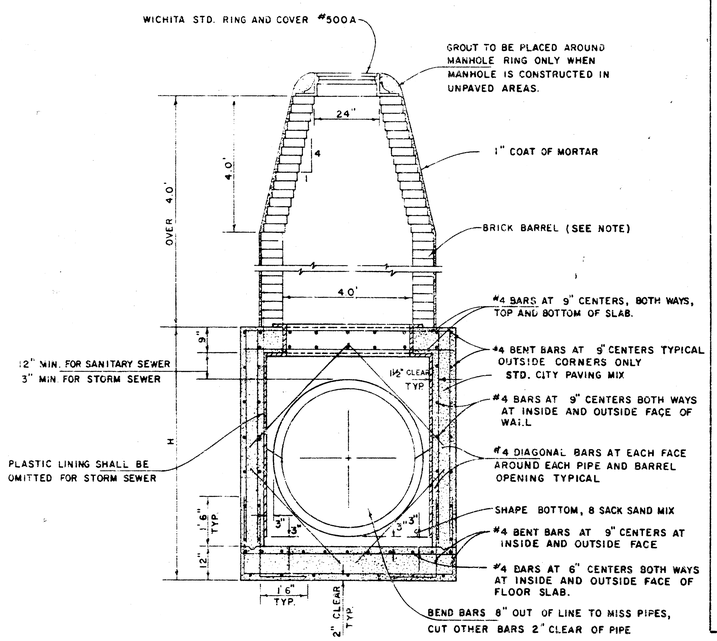

REINFORCED CONCRETE MANHOLE
DEPTH OF STACK: OVER 4.0'
SCALE 1" = 2'

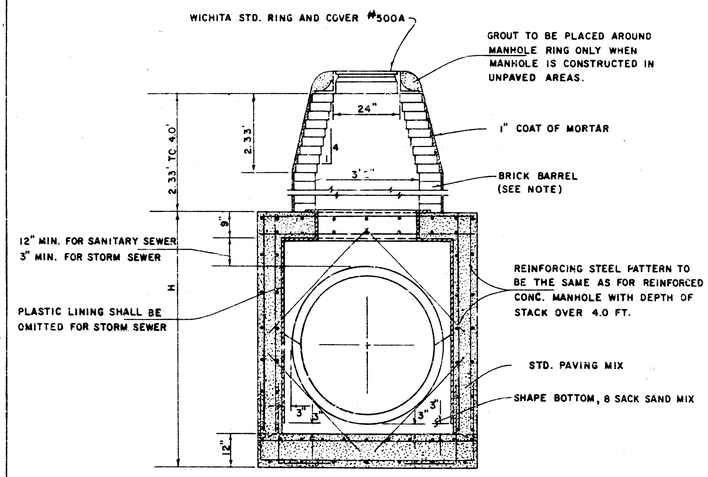

REINFORCED CONCRETE MANHOLE
DEPTH OF STACK: 2.33' TO 4.0'
SCALE 1" = 2'

NOTE :
BRICK BARRELS LESS THEN 16' DEEP SHALL HAVE 8" WALLS EXCEPT WHEN LOCATED WITHIN PUBLIC STREET OR ALLEY PAVEMENT THEN THE WALL SHALL BE 12". BRICK BARRELS MORE THEN 16' DEEP SHALL HAVE 12" WALLS. THE "L" AND "W" DIMENSIONS SHALL BE A MINIMUM OF 5'6" FOR BRICK BARRELS WITH 8" WALLS AND 6'2" FOR BRICK BARRELS WITH 12" WALLS.

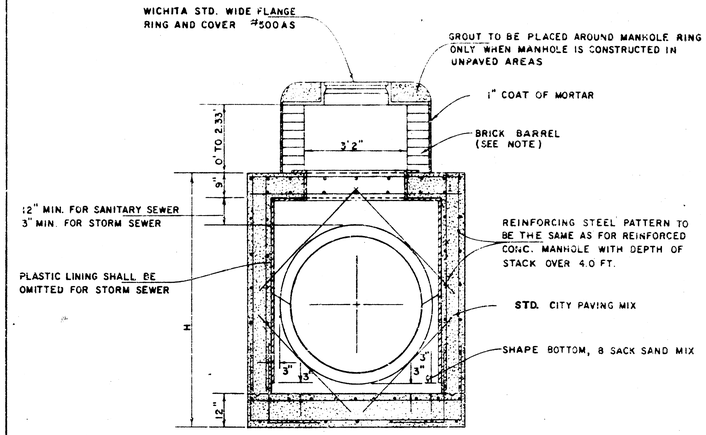

REINFORCED CONCRETE MANHOLE
DEPTH OF STACK: 0' TO 2.33'
SCALE 1" = 2'

NOTE — H.F.R.C.P. ▬▬▬ STORM SEWER PIPE TO BE USED AT MOST MANHOLE LOCATIONS IN PLACE OF THE CIRCULAR PIPE INDICATED HERE. SEE DETAIL SHEETS 13 & 14 FOR MANHOLE GEOMETRICS.

STANDARD DETAILS
REINFORCED CONCRETE MANHOLES
CITY OF WICHITA

APRIL 1978 REVISED APRIL, 1980

19 20 49

FILMED FROM THE BEST AVAILABLE COPY....

FILMED FROM THE BEST AVAILABLE COPY ....

14 3 41 19

R.M. BRUGGEMAN — CITY OF MICHIGAN, KS — DIR. ENGINEERING

DETAIL STANDARD TYPE IA CURB INLET

① ISSUED 2-10-81

SECTION C - C

(SCALE 1" = 1'-0")

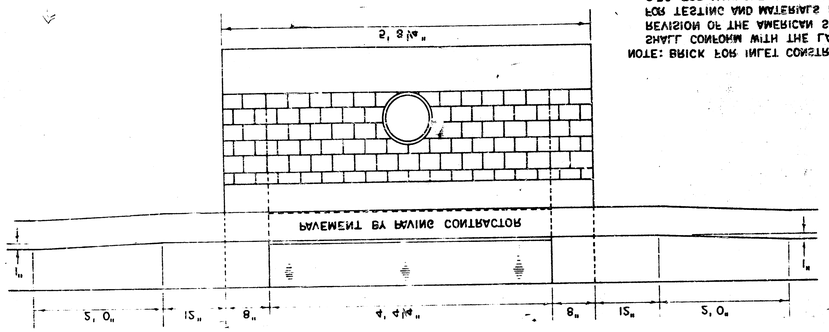

NOTE: BRICK FOR INLET CONSTRUCTION FOR TESTING AND MATERIALS DESIGNATION REVISION OF THE AMERICAN SOCIETY SHALL CONFORM WITH THE LATEST C-32 FOR MANHOLE BRICK GRADE MS.

SECTION B - B

(SCALE 1" = 1'-0")

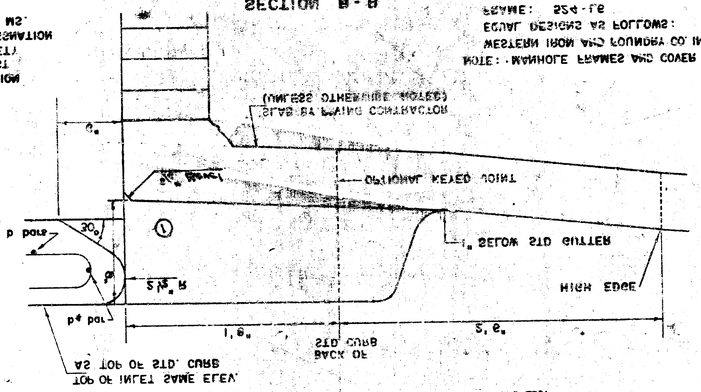

COVER: CSS 24 "NORBY"
FRAME (ALTERNATE): 200 #
FRAME: 254-16
EQUAL DESIGNS AS FOLLOWS:
WESTERN IRON AND FOUNDRY CO. INC. OR

NOTE: MANHOLE FRAMES AND COVER ARE

MANHOLE COVER

WEIGHT = 110 LBS.
(SCALE 1" = 1')

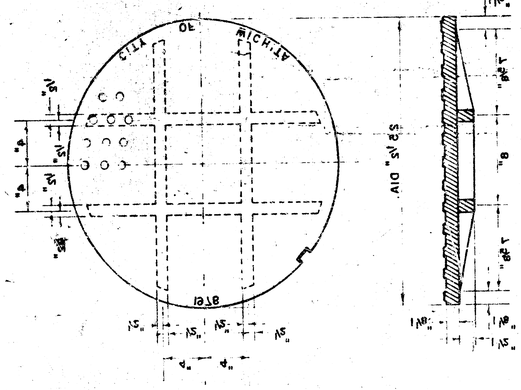
CITY OF MICHITA
24" DIA
4½"
1½"
1"
1½"
1"
1½"
1