COLOR PLOT STYLE PLOTTING GUIDE

1	2	3	4	5	6	7	8	9	10	11	12	13	14	15	16	17	18	19	20
21	22	23	24	25	26	27	28	29	30	31	32	33	34	35	36	37	38	39	40

BENCH MARKS:

CITY OF WICHITA SET SITE BENCHMARK ON CURB
ELEV. = 133.46 (CITY DATUM)

7' NW OF CENTER OF CURB INLET
159' SSE OF NORTHWEST PROPERTY CORNER
227' NNW OF SOUTHWEST PROPERTY CORNER

INDEX

COVER SHEET	1
LINES 1 & 2	2
LINE 3	3
DETAIL	4
DETAIL	5
DETAIL	6
DETAIL	7
DETAIL	8
DETAIL	9
DETAILS	10

STORM WATER SEWER TO SERVE

RIDGE PLAZA 8TH ADDITION

LOTS 4 & 5, BLK. B

PRIVATE PROJECT NUMBER: 1464 PPS (607861)

CITY OF WICHITA, KANSAS

JIM ARMOUR, P.E. INTERIM CITY ENGINEER

AUGUST 2004

AS-BUILT
1/10/05
Date
Signed

APPROVED AS NOTED
BY CITY ENGINEER OF WICHITA

STORM SEWERS VRH 8/30/04

NOTE TO CONTRACTORS

INSTALLATION, INSPECTION AND TESTING FOR THIS PROJECT IS TO BE PROVIDED BY A LICENSED CONSULTING ENGINEERING FIRM UNDER CONTRACT WITH THE OWNER/DEVELOPER. SAID INSPECTION TO BE IN ACCORDANCE WITH THE CITY OF WICHITA STANDARD CONSTRUCTION ENGINEERING PRACTICES AND CERTIFIED BY A LICENSED PROFESSIONAL ENGINEER. NO WORK SHALL BE PERFORMED IN DEDICATED EASEMENTS OR PUBLIC RIGHT-OF-WAY BY THE CONTRACTOR WITHOUT SUCH INSPECTION NOR SHALL ANY WORK BE COMMENCED WITHOUT WRITTEN AUTHORIZATION BY THE CITY ENGINEER. ALL CONSTRUCTION AND MATERIALS SHALL COMPLY WITH THE CITY OF WICHITA SPECIFICATIONS AND STANDARDS (ON FILE AND AVAILABLE IN THE CITY ENGINEER'S OFFICE).

LOCATION MAP

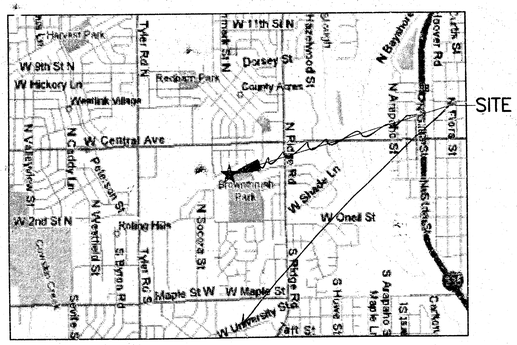

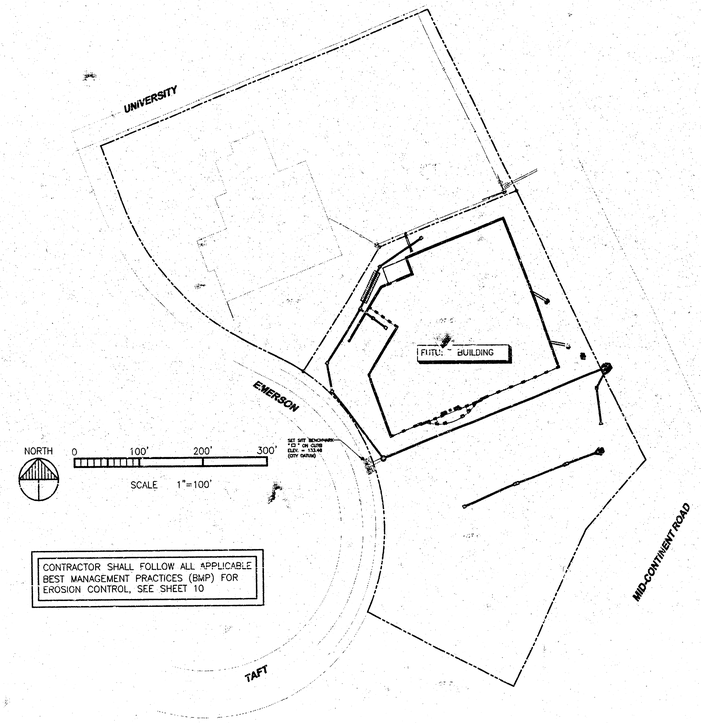

GENERAL NOTES

1. ALL EXISTING INFORMATION TAKEN FROM SURVEY BY BAUGHMAN COMPANY P.A. DATED FEBRUARY 24, 2004 AND REVISED APRIL 5, 2004.
2. SUBSURFACE GEOTECHNICAL INVESTIGATION, BY TERRACON JOB NUMBER 01045068, DATED APRIL 21, 2004.
3. CONTRACTOR TO FIELD VERIFY ALL EXISTING CONDITIONS INCLUDING LOCATIONS OF EXISTING UTILITIES, AND NOTIFY ENGINEER OF ANY DISCREPANCIES PRIOR TO STARTING CONSTRUCTION.
4. CONTRACTOR TO PREVENT DIRT AND/OR DEBRIS FROM ENTERING STORM SEWER OR BEING TRANSPORTED OFF-SITE IN AN UNCONTROLLED MANNER. CONTRACTOR TO VERIFY AT PROJECT CLOSEOUT THAT STORM SEWER SYSTEM IS CLEAR OF SEDIMENT AND/OR DEBRIS AND IS FULLY FUNCTIONAL.
5. ALL AREAS DISTURBED BY CONSTRUCTION WHICH ARE OUTSIDE THE LIMITS OF PAVING ARE TO BE RESTORED AND REVEGITATED.
6. CONTRACTOR TO PROVIDE TEMPORARY GRAVEL CONSTRUCTION ENTRANCE AT ALL CONSTRUCTION ACCESS LOCATIONS. SEE DETAIL 4/10.
7. ALL EROSION CONTROL ELEMENTS ARE TEMPORARY. CONTRACTOR TO INSTALL EROSION CONTROL ELEMENTS PRIOR TO START OF LAND DISTURBING ACTIVITIES, MAINTAIN IN GOOD CONDITION DURING CONSTRUCTION AND REMOVE FROM THE SITE UPON COMPLETION OF FINAL PAVING AND TURF ESTABLISHMENT.
8. CONTRACTOR TO INSTALL SILT FENCE OR STRAWBALES AROUND ALL EXISTING STORM SEWER INLETS AND MANHOLES PRIOR TO THE START OF LAND DISTURBING ACTIVITIES AND AROUND ALL NEW STORM SEWER INLETS AND MANHOLES AFTER THEY ARE INSTALLED. SEE DETAIL 1/10 AND 3/10.
9. ALL UTILITY DEMOLITION AND/OR ABANDONMENT TO BE PERFORMED IN ACCORDANCE WITH CITY OF WICHITA AND STATE OF KANSAS REGULATIONS AND STANDARDS.
10. EXISTING UTILITIES ARE SHOWN IN THEIR APPROXIMATE LOCATIONS. CONTRACTOR TO FIELD VERIFY THE LOCATION OF ALL EXISTING UTILITIES WHICH MAY INCLUDE BUT IS NOT LIMITED TO: ELECTRIC, TELEPHONE, GAS, CABLE TV, COMPUTER CABLE, FIBER OPTIC CABLE, SANITARY SEWER, STORM SEWER AND WATERMAIN.
11. ALL EXISTING UTILITIES AND OTHER IMPROVEMENTS ARE TO REMAIN UNLESS NOTED OTHERWISE.
12. CONTRACTOR TO PROTECT FROM DAMAGE ALL EXISTING IMPROVEMENTS, LANDSCAPING, STRUCTURES AND UTILITIES THAT ARE TO REMAIN. CONTRACTOR TO REPAIR ANY DAMAGE AT OWN EXPENSE.
13. CONTRACTOR TO FIELD VERIFY THE EXACT LOCATION AND ELEVATION OF EXISTING STORM AND SANITARY SEWER PRIOR TO THE START OF CONSTRUCTION.
14. SEE ARCHITECTURAL FOR DIMENSIONED SITE LAYOUT, FENCING, STRIPING AND LANDSCAPING. SEE ELECTRICAL FOR SITE LIGHTING.
15. CONTRACTOR TO PROVIDE TEMPORARY SEED AND MULCH ON ALL NON-PAVED AREAS WITHIN 7 DAYS AFTER ROUGH GRADING IS COMPLETED. SEED WITH ANNUAL RYE SEED AT 60 LB. PER ACRE AND WOOD MULCH FIBER AT 45 LBS PER 1,000 SF.
16. PROVIDE PERMANENT SEEDING, FERTILIZING AND MULCH OVER ALL DISTURBED AREAS OUTSIDE THE LIMITS OF PAVING PER KANSAS DOT SPECIFICATION.
17. PROVIDE THE FOLLOWING MINIMUM COVER OVER THE TOP OF PIPE AS FOLLOWS:
    A. 42" OVER WATERMAIN
    B. 1' OVER STORM SEWER
18. ALL WORK TO CONFORM WITH CITY OF WICHITA AND STATE OF KANSAS STANDARDS AND REGULATIONS.
19. ALL EXCAVATIONS MUST COMPLY WITH THE REQUIREMENTS OF OSHA 29 CFR, PART 1926, SUBPART P "EXCAVATIONS AND TRENCHES". THIS DOCUMENT STATES THAT EXCAVATION SAFETY IS THE SOLE RESPONSIBILITY OF THE CONTRACTOR.
20. STORM SEWER INLETS AND MANHOLES ARE SHOWN ON PLAN LARGER THAN ACTUAL SIZE. COORDINATE LOCATION OF MANHOLE COVER AND CASTING SO THAT IT IS PROPERLY LOCATED AT THE BACK OF CURBLINE FOR THE CURB INLETS OR CENTERED IN THE AREA AS SHOWN ON THE PLAN FOR THE DROP INLETS AND MANHOLE COVERS.
21. REMOVE ALL SOILS AND SEDIMENTS TRACKED OR OTHERWISE DEPOSITED ONTO PUBLIC AND PRIVATE PAVEMENT AREAS. REMOVAL SHALL BE ON A DAILY BASIS THROUGHOUT THE DURATION OF THE CONSTRUCTION. CLEAN PAVED ROADWAYS BY SHOVELING OR SWEEPING. STREET WASHING IS ALLOWED ONLY AFTER SHOVELING OR SWEEPING HAS REMOVED SEDIMENT. SEE CITY OF WICHITA STANDARDS.
22. CONTRACTOR WILL BE REQUIRED TO PROVIDE NOTICE TO UTILITY COMPANIES A MINIMUM OF FORTY-EIGHT (48) HOURS PRIOR TO ANY EXCAVATION AS FOLLOWS:

KANSAS ONE-CALL	687-2470

THE CONTRACTOR MUST NOTIFY THE FOLLOWING IN CASE OF AN EMERGENCY:

COX COMMUNICATIONS	262-4270
KANSAS GAS SERVICE COMPANY	1-888-482-4950
WESTAR ENERGY (ELETRIC)	383-8650
AQUILA ENERGY (GAS)	1-800-303-0357
SOUTHWESTERN BELL TELEPHONE CO.	1-800-286-8313
CITY OF WICHITA WATER DEPT. (WATER)	286-4908
CITY OF WICHITA SEWER MAINT. (SS)	286 4024
CITY OF WICHITA STORM SEWER MAINT.	286-4090
CITY OG WICHITA TRAFFIC MAINT.	268-4034

23. CONTRACTOR SHALL NOT START WORK ON THE PROJECT UNTIL THE PROJECT INSPECTOR IS ASSIGNED TO THE PROJECT AND IS PRESENT ON SITE. CONTRACTOR SHALL NOT START THE PROJECT UNTIL ALL NECESSARY BONDS AND PERMITS HAVE BEEN OBTAINED. BONDS MAY INCLUDE BUT ARE NOT LIMITED TO STATUTORY, PERFORMANCE & MAINTENANCE FOR AREAS IN PUBLIC RIGHT-OF-WAY AND EASEMENT. FOR PROJECTS WITHIN THE CITY OF WICHITA CONTACT TOM MASON (268-4547). ANY WORK DONE WITHOUT INSPECTION WILL BE REQUIRED TO BE UNCOVERED FOR INSPECTION.
24. RUBBLE FROM THE REMOVAL OF MISCELLANEOUS STRUCTURES AND EXCESS EXCAVATION WHICH IS TO BE WASTED SHALL BE DISPOSED OF ON SITES TO BE PROVIDED BY THE CONTRACTOR. THESE SITES SHALL BE APPROVED BY THE ENGINEER AS TO SUITABILITY, APPEARANCE AND SITE LOCATION. LOCATIONS THAT, IN THE OPINION OF THE ENGINEER, WILL LEAVE AN UNSIGHTLY APPEARANCE WILL NOT BE APPROVED. ALL DISPOSAL SITES MUST BE APPROVED BY THE KANSAS DEPARTMENT OF HEALTH AND ENVIROMENT. MATERIALS EITHER STOCKPILED OR DISPOSED OF IN A FLOOD PLAIN WOULD REQUIRE A KANSAS STATE BOARD OF AGRICULTURE PERMIT. ANY MATERIAL DUMPED IN WATER OF THE UNITED STATES OR WETLANDS IS SUBJECTED TO U.S. CORPS. OF ENGINEERS PERMITTING REGULATIONS. ANY MATERIAL BURIED OR STOCKPILED BEYOND APPROVED CONSTRUCTION LIMITS WOULD REQUIRE ADDITIONAL ARCHAEOLOGICAL INVESTIGATION UNLESS BURIED IN A PREVIOUSLY APPROVED BORROW LOCATION.
25. THE CONSULTANT ENGINEER SHALL DOCUMENT CONSTRUCTION WITH FINAL RECORD DRAWINGS. FINAL RECORD (AS-BUILT) INFORMATION MAY BE ADDED TO THE ORIGINAL SIGNED MYLAR PLANS. ADD INFORMATION INCLUDING THE SIZE, MAKE, AND READING OF ALL METERS. ONE SET OF MYLAR FINAL RECORD PLANS SHALL BE SUBMITTED ALONG WITH THE FOLLOWING NUMBER OF FULL-SIZED COPIES:

WATER LINES	1
SANITARY SEWERS	3
STORM DRAINS	1
SANITARY/STORM (TOGETHER)	3
PAVING	2

PATRICK G. BLEES
ARCHITECTURE PLANNING DESIGN

PATRICK G. BLEES, AIA
NORTHWESTERN BUILDING
219 N. 2ND ST., SUITE 301
MINNEAPOLIS, MN 55401
PHONE: (612) 338-6677
FAX: (612) 338-2995
E-MAIL: info@cmarch.com
CONTACT: GARY FAGERSTROM

CONSULTANTS:

CIVIL ENGINEER
VAN SICKLE ALLEN AND ASSOC
2955 XENIUM LN N, SUITE 10
PLYMOUTH, MN 55441
763-577-9118
THOMAS MADIGAN

STRUCTURAL ENGINEER
VAN SICKLE ALLEN AND ASSOC
2955 XENIUM LN N, SUITE 10
PLYMOUTH, MN 55441
763-577-9105
KEITH JACOBSON

LANDSCAPE ARCHITECT
WESTWOOD PROF. SERVICES, INC.
7599 ANAGRAM DRIVE
EDEN PRAIRIE, MN 55344
952-937-5150
DAN SJORDAL

SEAL:

THOMAS J. MADIGAN LICENSED 15227 KANSAS PROFESSIONAL ENGINEER

slumberland

RIDGE PLAZA
8TH ADDITION
LOTS 4 AND 5, BLOCK B
444 S EMERSON STREET
WICHITA, KS 67209

SHEET TITLE:

STORM SEWER

COVER SHEET

REVISIONS:

NO:	DATE:	BY:
2	05/19/04	NO REVISIONS THIS SHEET
3	06/02/04	NO REVISIONS THIS SHEET
4	06/30/04	NO REVISIONS THIS SHEET
5	07/16/04	NO REVISIONS THIS SHEET
6	08/09/04	CITY
7	08/20/04	NO REVISIONS THIS SHEET

PROJECT NO: 03109-15
DRAWING DATE: 08-20-04
DRAWN BY: GAV

1

SHEET 1 OF 10

FILE: 03316 1s

COPYRIGHT PATRICK G. BLEES, AIA 2004

COLOR	1	2	3	4	5	6	7	8	9	10	11	12	13	14	15
PEN	.25	.25	.35	.70	1.00	.25	.70	.35	.25	.50	.25	.35	.50	.35	.25	.50	ABC

PLOTTING GUIDE

NORTH

SCALE:
1"=5' VERTICAL
1"=20' HORIZONTAL

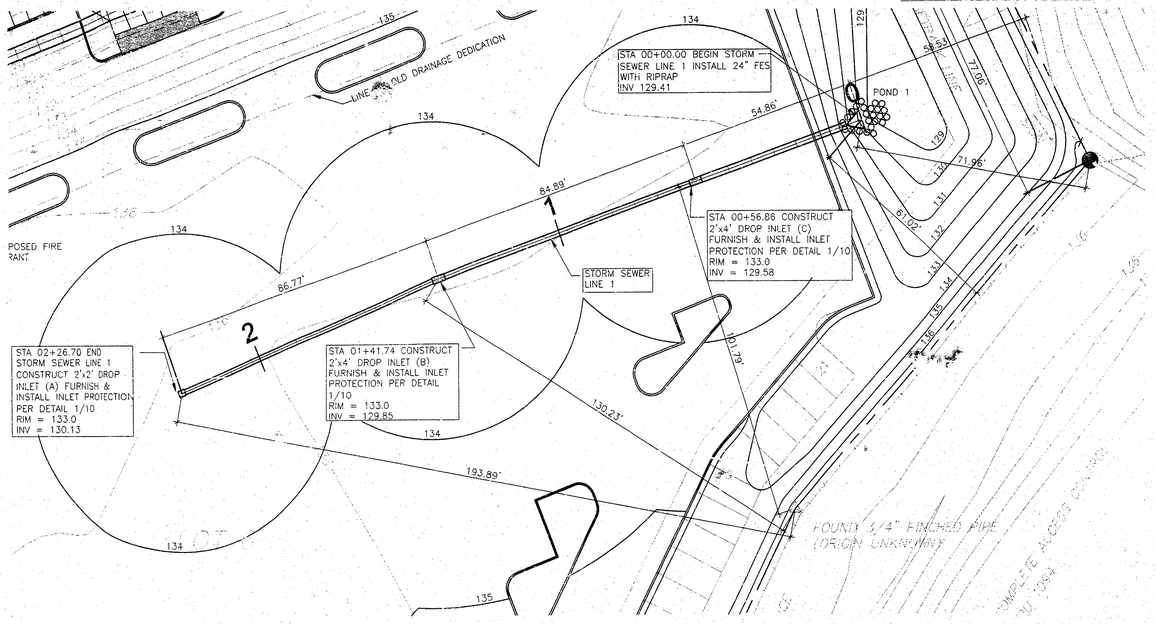

NOTE: CONTRACTOR SHALL TV TEST THIS STORM SEWER LINE.

NORTH

SCALE:
1"=5' VERTICAL
1"=20' HORIZONTAL

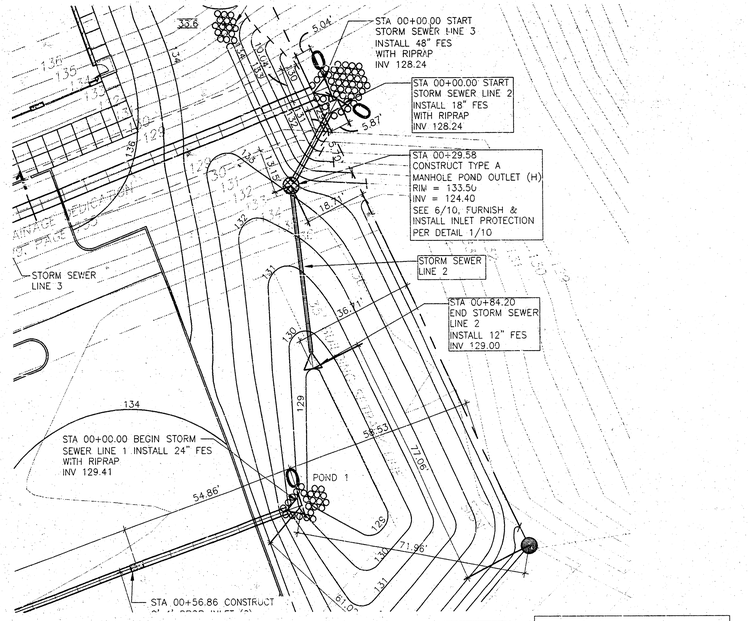

NOTE: CONTRACTOR SHALL TV TEST THIS STORM SEWER LINE.

1464 PPS

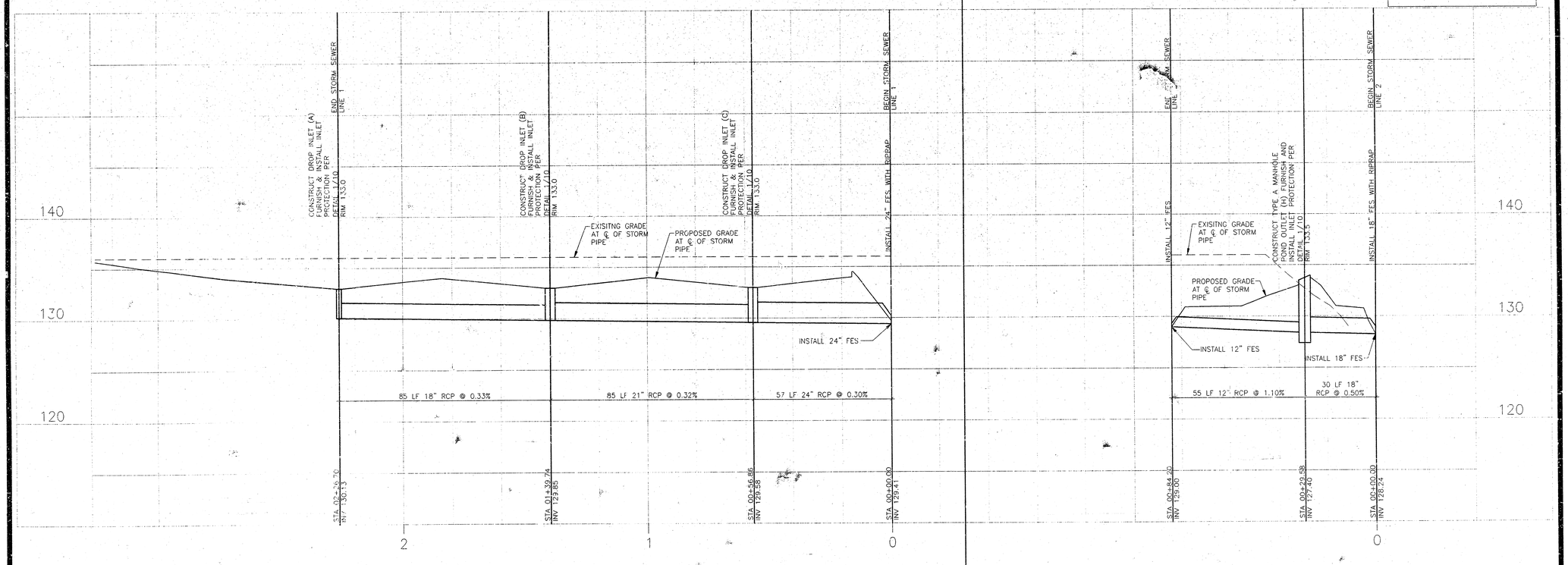

PATRICK G. BLEES
ARCHITECTURE PLANNING DESIGN

PATRICK G. BLEES, AIA
NORTHWESTERN BUILDING
219 N. 2ND ST., SUITE 301
MINNEAPOLIS, MN 55401
PHONE: (612) 338-6677
FAX: (612) 338-2995
E-MAIL: info@cmarch.com
CONTACT: GARY FAGERSTROM

CONSULTANTS:

CIVIL ENGINEER
VAN SICKLE ALLEN AND ASSOC
2955 XENIUM LN N, SUITE 10
PLYMOUTH, MN 55441
763-577-9118
THOMAS MADIGAN

STRUCTURAL ENGINEER
VAN SICKLE ALLEN AND ASSOC
2955 XENIUM LN N, SUITE 10
PLYMOUTH, MN 55441
763-577-9105
KEITH JACOBSON

LANDSCAPE ARCHITECT
WESTWOOD PROF. SERVICES, INC.
7599 ANAGRAM DRIVE
EDEN PRAIRIE, MN 55344
952-937-5150
DAN SJORDAL

SEAL:

THOMAS J. MADIGAN LICENSED 16227 KANSAS PROFESSIONAL ENGINEER 8/20/04

slumberland

RIDGE PLAZA
8TH ADDITION
LOTS 4 AND 5, BLOCK B
444 S EMERSON STREET
WICHITA, KS 67209

SHEET TITLE:

LINE 1 & 2

REVISIONS:

NO:	DATE:	BY:
2	05/19/04	NO REVISIONS THIS SHEET
3	06/02/04	NO REVISIONS THIS SHEET
4	06/30/04	NO REVISIONS THIS SHEET
5	07/16/04	NO REVISIONS THIS SHEET
6	08/09/04	CITY
7	08/20/04	NO REVISIONS THIS SHEET

PROJECT NO: 03109-15
DRAWING DATE: 08-20-04
DRAWN BY: QAV

2

SHEET 2 OF 10
FILE: 03316 2-4

COPYRIGHT PATRICK G. BLEES, AIA 2004

NORTH

SCALE:
1"=5' VERTICAL
1"=20' HORIZONTAL

EMERSON

STA 00+00.00 START STORM SEWER LINE 4
STA 03+71.10 END STORM SEWER LINE 3
CONSTRUCT 2'x2' DROP INLET (G) ON 5'x6' RCMH FURNISH & INSTALL INLET PROTECTION PER DETAIL 1/10
RIM = 135.20
INV = 128.20 (E,W)
INV 128.73 (NW)

STA 01+28.59 CONSTRUCT TYPE 1 CURB INLET (K) ON 5'x6' RCMH FURNISH & INSTALL INLET PROTECTION PER DETAIL 1/10
RIM = 134.50
INV = 129.20

EXISTING 42" RCP TO BE REMOVED AND RESET

REMOVE EXISTING STORM STRUCTURES AND REPLACE WITH 5' TYPE 1 CURB INLET

REMOVE EXISTING STORM STRUCTURES AND REPLACE WITH 5' TYPE 1 CURB INLET

MODIFY EXISTING STORM STRUCTURE TO DRIVEWAY INLET FL=129.33

MOVED INLET 19' to the south installed new driveway inlet FL=129.32

PROPOSED FIRE HYDRANT

STORM SEWER LINE 4

STORM SEWER LINE 3

LINE OF OLD DRAINAGE DEDICATION

NEW 20' DRAINAGE EASEMENT

NEW 20' DRAINAGE EASEMENT

LINE OF OLD DRAINAGE DEDICATION

STA 00+00.00 BEGIN STORM SEWER LINE 1 INSTALL 24" FES WITH RIPRAP
INV 129.41

STA 00+00.00 START STORM SEWER LINE 3
INSTALL 48" FES
WITH RIPRAP
INV 128.24

STA 00+00.00 START STORM SEWER LINE 2
INSTALL 18" FES
WITH RIPRAP
INV 128.24

STA 00+29.58
CONSTRUCT TYPE A MANHOLE POND OUTLET (H)
RIM = 133.50
INV = 124.40
SEE 6/10, FURNISH & INSTALL INLET PROJECTION PER DETAIL 1/10

STORM SEWER LINE 2

STA 00+84.20
END STORM SEWER LINE 2
INSTALL 12" FES
INV 129.00

POND 1

STA 00+56.86 CONSTRUCT 2'x4' DROP INLET (C) FURNISH & INSTALL INLET PROTECTION PER DETAIL 1/10
RIM = 133.0
INV = 129.58

STORM SEWER

1464 PPS

EXISTING INLET FURNISH & INSTALL INLET PROTECTION PER DETAIL 1/10
RIM 133.5
RAISE RIM TO 133.5

END STORM SEWER LINE 3

CONSTRUCT 2'x2' DROP INLET ON 5'x6' RCMH FURNISH & INSTALL INLET PROTECTION PER DETAIL 1/10
RIM 135.2

BEGIN STORM SEWER LINE 3

INSTALL 48" FES WITH RIPRAP

PROPOSED GRADE AT ℄ OF STORM PIPE

EXISITNG GRADE AT ℄ OF STORM PIPE

INSTALL 48" FES

ROUTE PROPOSED 8" WATERMAIN BELOW STORM SEWER

28 LF 42" RCP @ 0.10%

371 LF 48" RCP @ 0.10%

STA 03+99.10
INV 128.64

STA 03+71.10
INV 128.62 (E,W)
INV 128.73 (NW)

STA 04+01
INV 128.24

140
130
120

3 2 1 0

PATRICK G. BLEES
ARCHITECTURE PLANNING DESIGN

PATRICK G. BLEES, AIA
NORTHWESTERN BUILDING
219 N. 2ND ST., SUITE 301
MINNEAPOLIS, MN 55401
PHONE: (612) 338-6677
FAX: (612) 338-2995
E-MAIL: info@cmarch.com
CONTACT: GARY FAGERSTROM

CONSULTANTS:

CIVIL ENGINEER
VAN SICKLE ALLEN AND ASSOC
2955 XENIUM LN N, SUITE 10
PLYMOUTH, MN 55441
763-577-9118
THOMAS MADIGAN

STRUCTURAL ENGINEER
VAN SICKLE ALLEN AND ASSOC
2955 XENIUM LN N, SUITE 10
PLYMOUTH, MN 55441
763-577-9105
KEITH JACOBSON

LANDSCAPE ARCHITECT
WESTWOOD PROF. SERVICES, INC.
7599 ANAGRAM DRIVE
EDEN PRAIRIE, MN 55344
952-937-5150
DAN SJORDAL

SEAL:

THOMAS J. MADIGAN
LICENSED
16227
KANSAS
PROFESSIONAL ENGINEER
8/27/04

slumberland

RIDGE PLAZA
8TH ADDITION
LOTS 4 AND 5, BLOCK B
444 S EMERSON STREET
WICHITA, KS 67209

SHEET TITLE:

LINE 3

REVISIONS:

NO:	DATE:	BY:
2	05/19/04	NO REVISIONS THIS SHEET
3	06/02/04	NO REVISIONS THIS SHEET
4	06/30/04	NO REVISIONS THIS SHEET
5	07/16/04	NO REVISIONS THIS SHEET
6	08/09/04	CITY
7	08/20/04	CITY

PROJECT NO: 03109-15
DRAWING DATE: 08-20-04
DRAWN BY: QAV

3

SHEET 3 OF 10
FILE: 03316 2-4

COPYRIGHT PATRICK G. BLEES, AIA 2004

PLOTTING GUIDE																			
COLOR	1	2	3	4	5	6	7	8	9	10	11	12	13	14	15	16	17	18	19
PEN	22	22	30	30	70	1.02	25	19	13	51	51	35	25	19	13	35	25	19	13
SHADE	100%	100%	100%	100%	100%	100%	100%	100%	100%	100%	100%	25%	25%	25%	25%	25%	25%	25%	25%

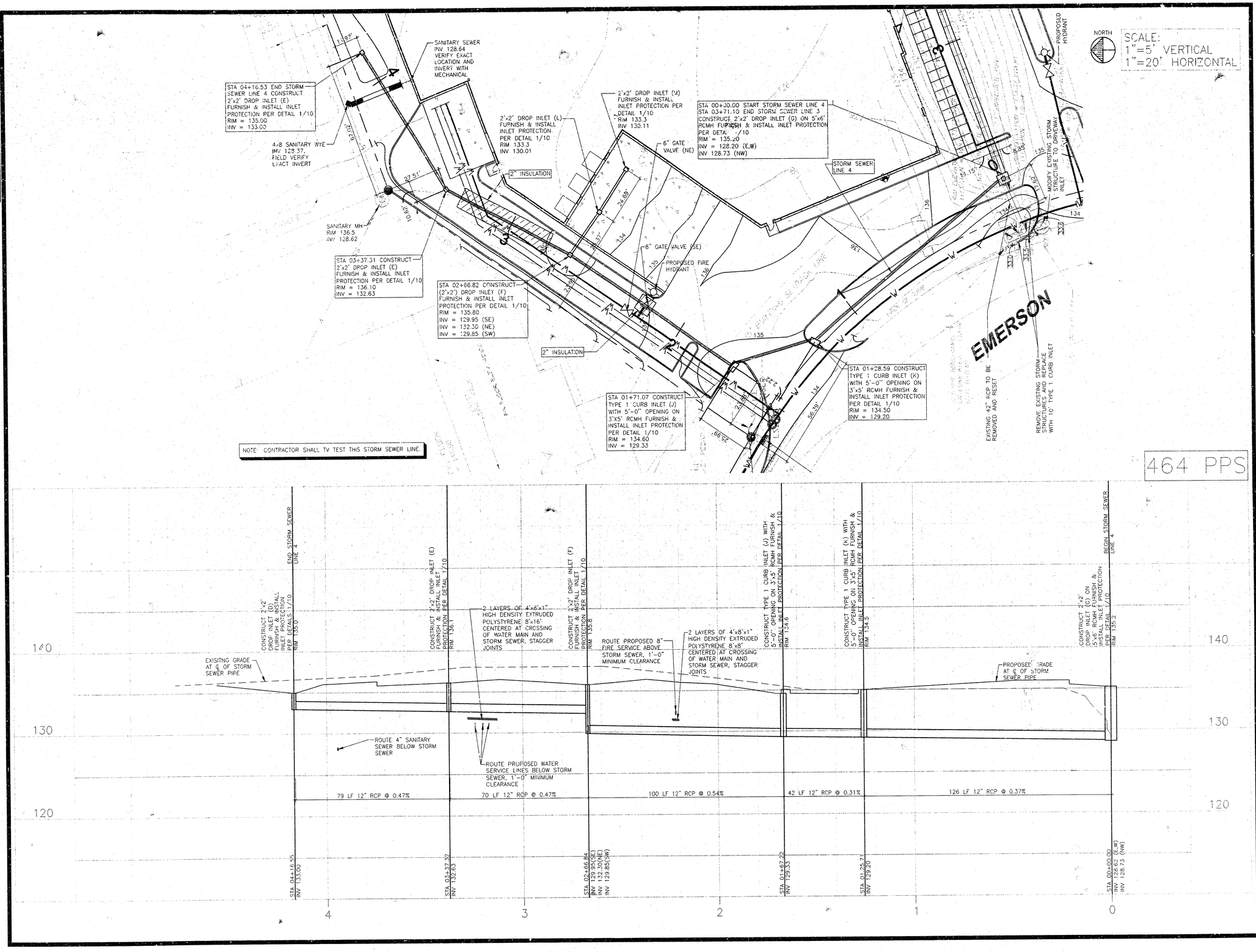

PATRICK G. BLEES
ARCHITECTURE PLANNING DESIGN

PATRICK G. BLEES, AIA
NORTHWESTERN BUILDING
219 N. 2ND ST., SUITE 301
MINNEAPOLIS, MN 55401
PHONE: (612) 338-6677
FAX: (612) 338-2995
E-MAIL: info@pgarch.com
CONTACT: GARY FAGERSTROM

CONSULTANTS:

CIVIL ENGINEER
VAN SICKLE ALLEN AND ASSOC
2955 XENIUM LN N, SUITE 10
PLYMOUTH, MN 55441
763-577-9118
THOMAS MADIGAN

STRUCTURAL ENGINEER
VAN SICKLE ALLEN AND ASSOC
2955 XENIUM LN N, SUITE 10
PLYMOUTH, MN 55441
763-577-9105
KEITH JACOBSON

LANDSCAPE ARCHITECT
WESTWOOD PROF. SERVICES, INC.
7599 ANAGRAM DRIVE
EDEN PRAIRIE, MN 55344
952-937-5150
DAN SJORDAL

SEAL:

THOMAS J. MADIGAN LICENSED 16227 KANSAS PROFESSIONAL ENGINEER
8/20/04

slumberland

RIDGE PLAZA
8TH ADDITION
LOTS 4 AND 5, BLOCK B
444 S EMERSON STREET
WICHITA, KS 67209

SHEET TITLE:

STORM SEWER

LINE 4

REVISIONS:

NO:	DATE:	BY:
2	05/19/04	NO REVISIONS THIS SHEET
3	06/02/04	NO REVISIONS THIS SHEET
4	06/30/04	NO REVISIONS THIS SHEET
5	07/16/04	NO REVISIONS THIS SHEET
6	08/09/04	CITY NO REVISIONS
7	08/20/04	THIS SHEET

PROJECT NO: 03109-15
DRAWING DATE: 08-20-04
DRAWN BY: QAV

4

SHEET 4 OF 10
FILE: 03316 2-4

COPYRIGHT PATRICK G. BLEES, AIA 2004

PLOTTING GUIDE

COLOR	1	2	3	4	5	6	7	8	9	10	11	12	13	14	15
PEN	.25	.25	.35	.35	.70	.70	.70	.140	.140	.140	.200	.200	.200	.105	.105
SCALE	1/8"=1'-0"	1/4"=1'-0"	3/8"=1'-0"	1/2"=1'-0"	3/4"=1'-0"	1"=1'-0"	1 1/2"=1'-0"	3"=1'-0"							

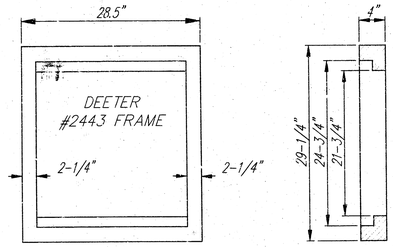

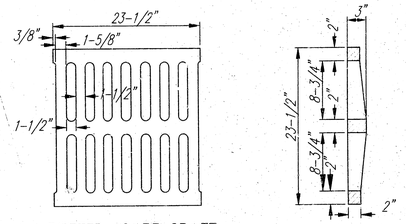

DEETER #2433 GRATE

24" x 24" Frame and Grate Detail

NOTE: Grates shall be imprinted on the top surface with "CITY OF WICHITA" using letters at least 1" in height. Other marking methods may be approved by the engineer.

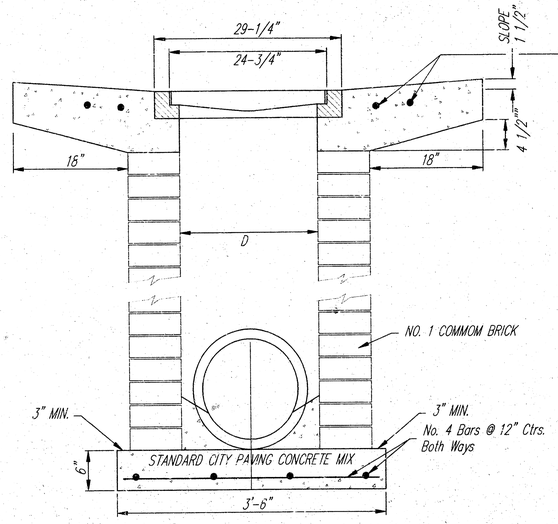

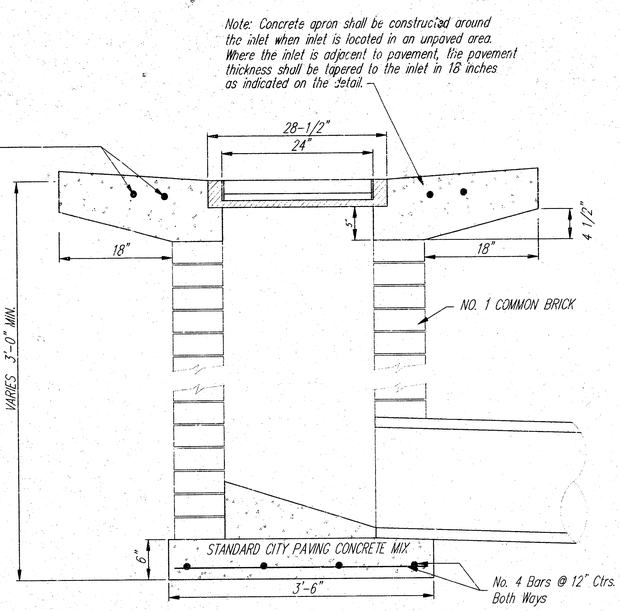

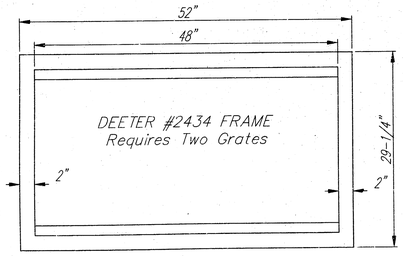

Double 24" x 24" Frame Detail

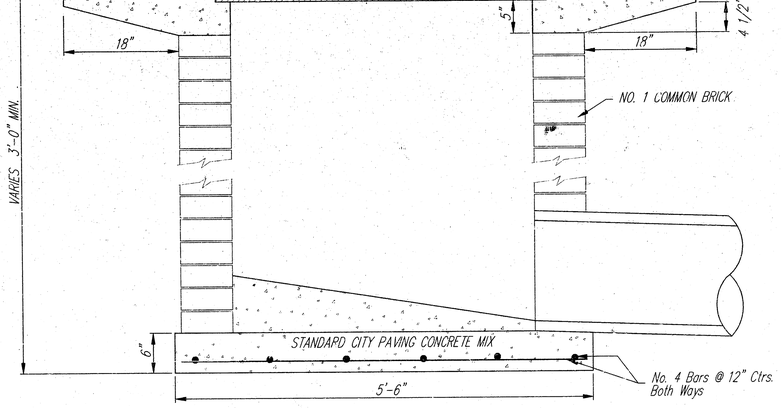

PATRICK G. BLEES
ARCHITECTURE PLANNING DESIGN

PATRICK G. BLEES, AIA
NORTHWESTERN BUILDING
219 N. 2ND ST., SUITE 301
MINNEAPOLIS, MN 55401
PHONE: (612) 338-6677
FAX: (612) 338-2995
E-MAIL: info@pgbarch.com
CONTACT: GARY FAGERSTROM

CONSULTANTS:

CIVIL ENGINEER
VAN SICKLE ALLEN AND ASSOC
2955 XENIUM LN N, SUITE 10
PLYMOUTH, MN 55441
763-577-9116
THOMAS MADIGAN

STRUCTURAL ENGINEER
VAN SICKLE ALLEN AND ASSOC
2955 XENIUM LN N, SUITE 10
PLYMOUTH, MN 55441
763-577-9105
KEITH JACOBSON

LANDSCAPE ARCHITECT
WESTWOOD PROF. SERVICES, INC.
7699 ANAGRAM DRIVE
EDEN PRAIRIE, MN 55344
952-937-5150
DAN SJORDAL

SEAL:

THOMAS J. MADIGAN LICENSED 18827 KANSAS PROFESSIONAL ENGINEER 8/20/04

slumberland

RIDGE PLAZA
8TH ADDITION
LOTS 4 AND 5, BLOCK B
444 S EMERSON STREET
WICHITA, KS 67209

SHEET TITLE:
CITY OF WICHITA
DROP INLET
SINGLE & DOUBLE

REVISIONS:

NO:	DATE:	BY:
2	05/19/04	NO REVISIONS THIS SHEET
3	06/02/04	NO REVISIONS THIS SHEET
4	06/30/04	NO REVISIONS THIS SHEET
5	07/16/04	NO REVISIONS THIS SHEET
6	08/09/04	CITY
7	08/20/04	NO REVISIONS THIS SHEET

PROJECT NO: 03109-15
DRAWING DATE: 08-20-04
DRAWN BY: GAV

5

SHEET 5 OF 10
FILE: 03316 5

COPYRIGHT PATRICK G. BLEES, AIA 2004

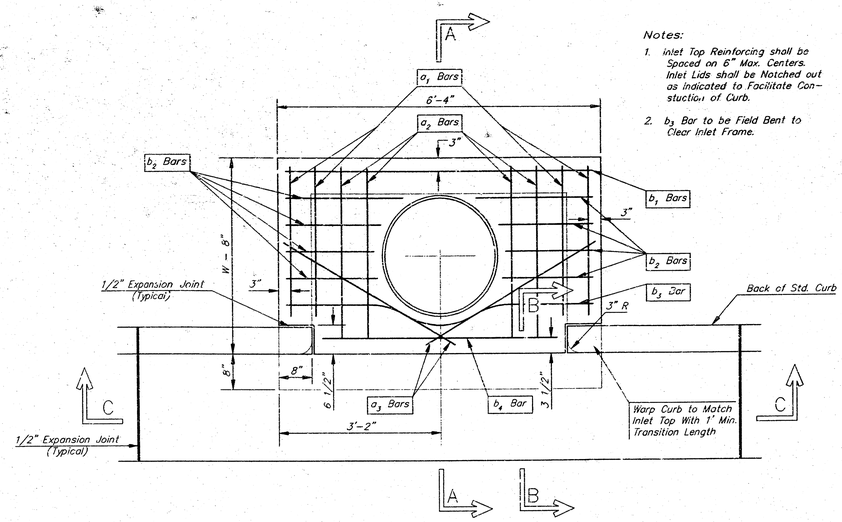

PLAN

Notes:

1. Inlet Top Reinforcing shall be Spaced on 6" Max. Centers. Inlet Lids shall be Notched out as Indicated to Facilitate Construction of Curb.
2. b_3 Bar to be Field Bent to Clear Inlet Frame.

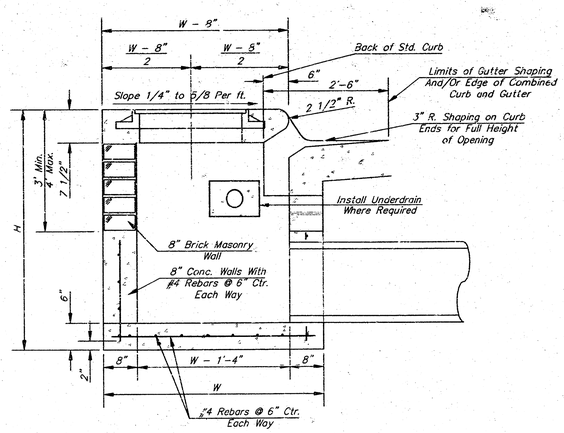

SECTION A-A

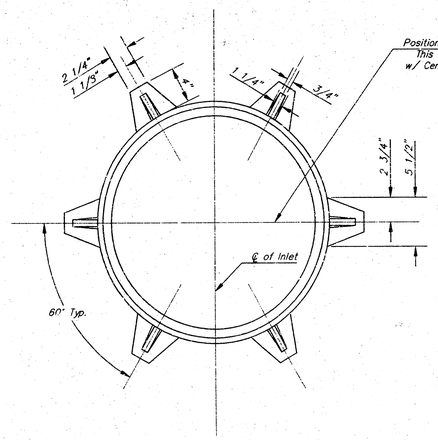

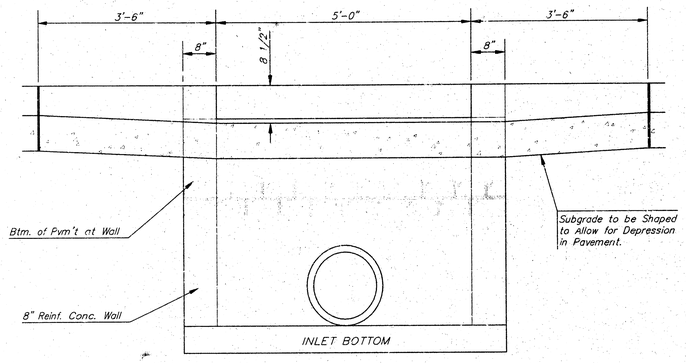

SECTION C-C

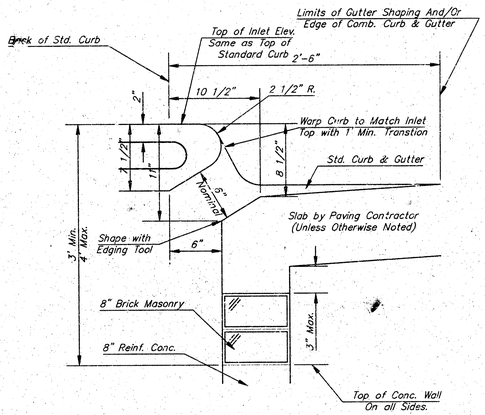

SECTION B-B

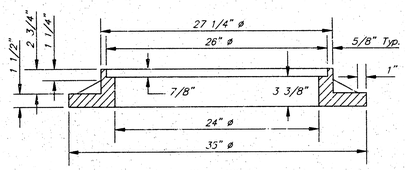

WT. = 180 lbs.

MANHOLE RING AND COVER

*See City of Wichita Standard Manhole Ring and Cover Detail Sheet for Cover Details to Be Used With Inlet Frame.

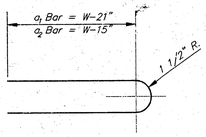

BENDING DIAGRAM

STEEL SCHEDULE

BAR		c_1	a_2	a_3	b_1 W=4'-4"	b_1 W=5'-4"	b_1 W=6'-4"	b_1 W=7'-4"	b_1 W=8'-4"	b_2	b_3	b_4	Wt. Lbs.
NUMBER		4	4	2	1	3	5	7	9	6	1	1	
SIZE		#4	#4	#4	#4	#4	#4	#4	#4	#4	#4	#6	
LENGTH	W=3'-0"	5'-7"	6'-7"	4'-0"	6'-1"	–	–	–	–	1'-9"	6'-2"	4'-8"	60±
	W=4'-0"	7'-7"	8'-7"	5'-0"	–	6'-1"	–	–	–	1'-9"	6'-2"	4'-8"	81±
	W=5'-0"	9'-7"	10'-7"	6'-0"	–	–	6'-1"	–	–	1'-9"	6'-2"	4'-8"	101±
	W=6'-0"	11'-7"	12'-7"	7'-0"	–	–	–	6'-1"	–	1'-9"	6'-2"	4'-8"	121±
	W=7'-0"	13'-7"	14'-7"	8'-0"	–	–	–	–	6'-1"	1'-9"	6'-2"	4'-8"	141±

Note: a_3 Bars to be Placed Approx. 2" Below Top of Inlet Cover.

STANDARD CURB INLET PRECAST TOPS

W	PRE-CAST TOP SIZE	PIPE SIZE	CU. YD. CONC.
3'-0"	3'-8" 6'-4" 7 1/2"	21" & SMALLER	0.38±
4'-0"	4'-8" 6'-4" 7 1/2"	24" & 30"	0.51±
5'-0"	5'-8" 6'-4" 7 1/2"	36" & 42"	0.64±
6'-0"	6'-8" 6'-4" 7 1/2"	48" & 54"	0.77±
7'-0"	7'-8" 6'-4" 7 1/2"	60" & 66"	0.90±

GENERAL NOTES

1. Concrete tops to be installed on thin mortar cushion to insure full support along brick walls. Concrete tops may be cast in place or precast. Concrete used for inlet construction shall be concrete pavement mix.
2. Contractor shall have the option of constructing 8" brick masonry walls between the concrete inlet base and top on this inlet when W=5'-0" and H=7'-0" or less.
3. Inlet invert shall be shaped with 8 sack sand mix concrete to create flow channels and to increase hydraulic efficiency such that the inlet will be self cleaning between all inlet and/or outlet pipes.
4. The ends of all pipes installed in inlets shall be cut off flush with the inside face of the inlet wall.

PATRICK G. BLEES
ARCHITECTURE PLANNING DESIGN

PATRICK G. BLEES, AIA
NORTHWESTERN BUILDING
219 N. 2ND ST., SUITE 301
MINNEAPOLIS, MN 55401
PHONE: (612) 338-6677
FAX: (612) 338-2995
E-MAIL: info@cmarch.com
CONTACT: GARY FAGERSTROM

CONSULTANTS:

CIVIL ENGINEER
VAN SICKLE ALLEN AND ASSOC
2955 XENIUM LN N, SUITE 10
PLYMOUTH, MN 55441
763-577-9118
THOMAS MADIGAN

STRUCTURAL ENGINEER
VAN SICKLE ALLEN AND ASSOC
2955 XENIUM LN N, SUITE 10
PLYMOUTH, MN 55441
763-577-9105
KEITH JACOBSON

LANDSCAPE ARCHITECT
WESTWOOD PROF SERVICES, INC.
7599 ANAGRAM DRIVE
EDEN PRAIRIE, MN 55344
952-937-5150
DAN SJORDAL

SEAL:

THOMAS J. MADIGAN LICENSED 16227 KANSAS PROFESSIONAL ENGINEER 8/26/04

slumberland

RIDGE PLAZA
8TH ADDITION
LOTS 4 AND 5, BLOCK B
444 S EMERSON STREET
WICHITA, KS 67209

SHEET TITLE:
CITY OF WICHITA
STANDARD TYPE 1
CURB INLET 5'-0" OPENING

REVISIONS:

NO:	DATE:	BY:
1	05/19/04	NO REVISIONS THIS SHEET
2	06/02/04	NO REVISIONS THIS SHEET
3	06/30/04	NO REVISIONS THIS SHEET
4	07/16/04	NO REVISIONS THIS SHEET
5	08/09/04	CITY
6	08/20/04	NO REVISIONS THIS SHEET
7		

PROJECT NO: 03109-15
DRAWING DATE: 08-20-04
DRAWN BY: GAV

6

SHEET 6 OF 10
FILE: 03316 6

COPYRIGHT PATRICK G. BLEES, AIA 2004

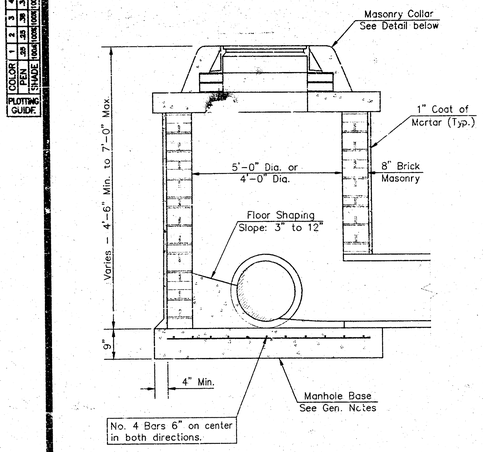

SHALLOW TYPE "A" MANHOLE

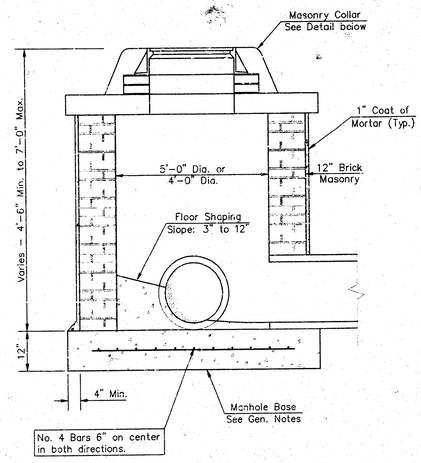

SHALLOW TYPE "B" MANHOLE

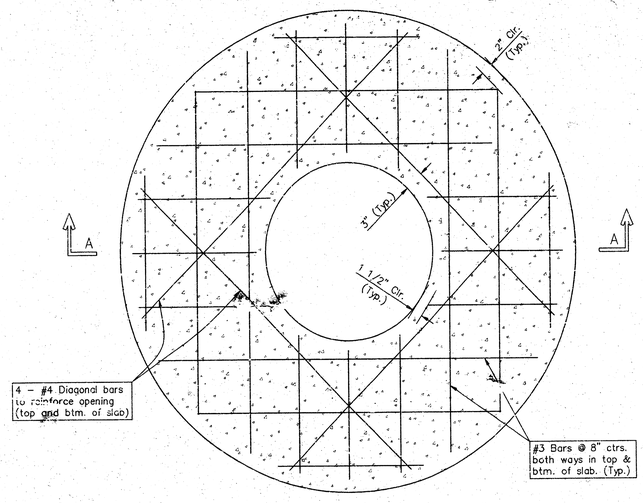

PLAN

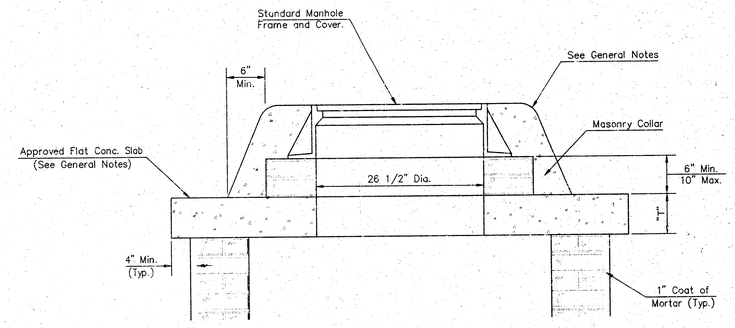

MASONRY COLLAR DETAIL

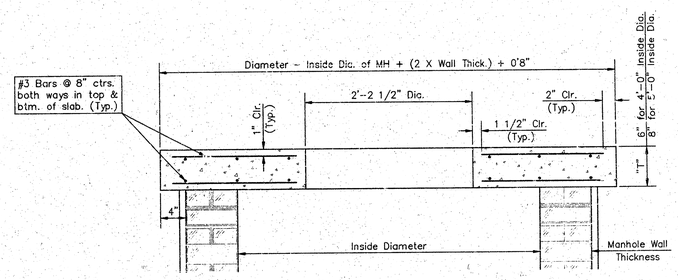

SECTION A-A

FLAT CONCRETE SLAB DETAILS

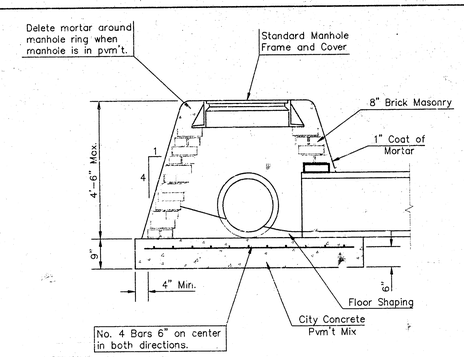

SPECIAL SHALLOW TYPE "A" MANHOLE

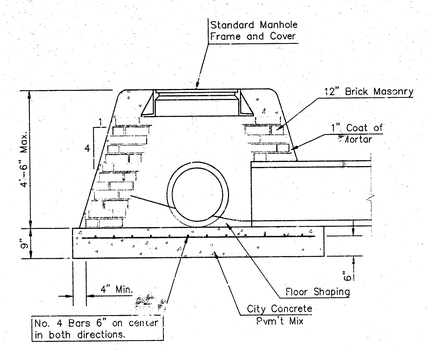

SPECIAL SHALLOW TYPE "B" MANHOLE

GENERAL NOTES

1. Mortar used in masonry construction shall contain 8 sacks of cement per cubic yard. Concrete used in manhole bases shall conform to the requirements of concrete for concrete pavement construction as specified in the city standard paving specifications using city concrete cement mix with 1 air entraining admixture. Mortar shall be placed around the manhole ring as shown on the drawings when manholes are constructed in unpaved areas. Type "A" shallow manholes can be used on sewers when the manhole is not located within public street pavement. Manholes constructed where pipe sizes are smaller than 24" shall have an inside diameter of 4'. Manholes constructed where pipe sizes are 24" or larger shall have an inside diameter of 5'. Completed manhole shall be without leaks and water tight.

2. Reinforcing steel shall be installed in the manhole bases and shall consist of no. 4 bars placed on 6" centers in both directions. The manhole base reinforcement shall be placed 6" above the bottom of the manhole base. All costs for furnishing and installing reinforcing steel shall be included in the unit price bid for the manhole.

3. The floors of all manholes shall be shaped with flow channels such that the manholes will be self cleaning and free of areas where solids could be deposited as sewage flows through the manhole from all inlet pipes to the outlet pipe. Flow channels shall be formed to match the bottom halves of the inflowing pipes and the outflowing pipe as shown by the drawings. Manhole floors shall have slopes of 3 inches per foot in the areas outside of the flow channels sloped toward the flow channels. Pipes laid through manholes shall have the top half removed to neat lines for the full inside diameter of the manhole. Manhole floors shall then be shaped around the bottom half of the pipe which forms the flow channel.

4. Pipes installed within the excavation made for the manhole shall be cradled with concrete to the limits of the manhole excavation. When clay pipe is used, the cradle shall extend to the first joint outside the manhole. The cradle shall be terminated at the clay pipe joint in a manner which will maintain the flexibility of the joint. Cost of cradle within manhole excavation or to clay pipe joints adjacent to manhole shall be included in the unit price bid for the manhole.

5. Manhole cover castings and manhole frame castings shall conform to the requirements as indicated in the standard specifications and as shown in the standard detail drawings.

6. The crowns of inflowing pipes shall never be set lower than the crown of the outflowing pipe.

7. Standard shallow manholes type "A" and "B" shall be paid for at the unit price bid per each for the type and diameter indicated. Standard special shallow manholes type "A" and "B" shall be paid for at the unit price bid per each for the type indicated. All standard shallow manhole diameters will be 4' unless indicated otherwise.

8. All brick used in manhole construction shall meet Grade SW of ASTM C652 or C62-87.

PATRICK G. BLEES
ARCHITECTURE PLANNING DESIGN

PATRICK G. BLEES, AIA
NORTHWESTERN BUILDING
219 N. 2ND ST., SUITE 301
MINNEAPOLIS, MN 55401
PHONE: (612) 338-6677
FAX: (612) 338-2995
E-MAIL: info@emarch.com
CONTACT: GARY FAGERSTROM

CONSULTANTS:

CIVIL ENGINEER
VAN SICKLE ALLEN AND ASSOC
2955 XENIUM LN N, SUITE 10
PLYMOUTH, MN 55441
763-577-9118
THOMAS MADIGAN

STRUCTURAL ENGINEER
VAN SICKLE ALLEN AND ASSOC
2955 XENIUM LN N, SUITE 10
PLYMOUTH, MN 55441
763-577-9105
KEITH JACOBSON

LANDSCAPE ARCHITECT
WESTWOOD PROF. SERVICES, INC.
7599 ANAGRAM DRIVE
EDEN PRAIRIE, MN 55344
952-937-5150
DAN SJORDAL

SEAL:

THOMAS J. MADIGAN 12823 LICENSED PROFESSIONAL ENGINEER KANSAS 8/20/04

slumberland

RIDGE PLAZA
8TH ADDITION
LOTS 4 AND 5, BLOCK B
444 S EMERSON STREET
WICHITA, KS 67209

SHEET TITLE:

CITY OF WICHITA
STANDARD/SPECIAL SHALLOW
MANHOLES TYPE "A" & "B"

REVISIONS:

NO:	DATE:	BY:
2	05/19/04	NO REVISIONS THIS SHEET
3	06/02/04	NO REVISIONS THIS SHEET
4	06/30/04	NO REVISIONS THIS SHEET
5	07/16/04	NO REVISIONS THIS SHEET
6	08/09/04	CITY
7	08/20/04	NO REVISIONS THIS SHEET

PROJECT NO: 03109-15
DRAWING DATE: 08-20-04
DRAWN BY: OAV

7

SHEET 7 OF 10
FILE: 03316 7

COPYRIGHT PATRICK G. BLEES, AIA 2004

PLOTTING GUIDE:

COLOR	1	2	3	4	5	6	7	8	9	10	11	12	13	14	15
PEN	25	35	45	70	100	120	150	170	200	220	250	280	310	340	370
SHADE	100%	100%	100%	100%	100%	100%	100%	100%	100%	100%	100%	100%	100%	100%	100%

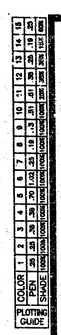

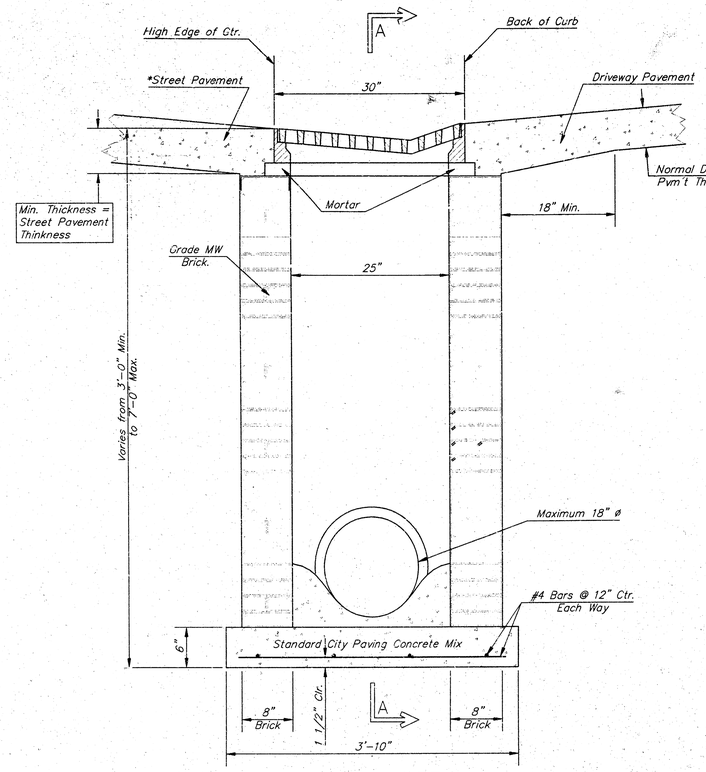

END OUTLET

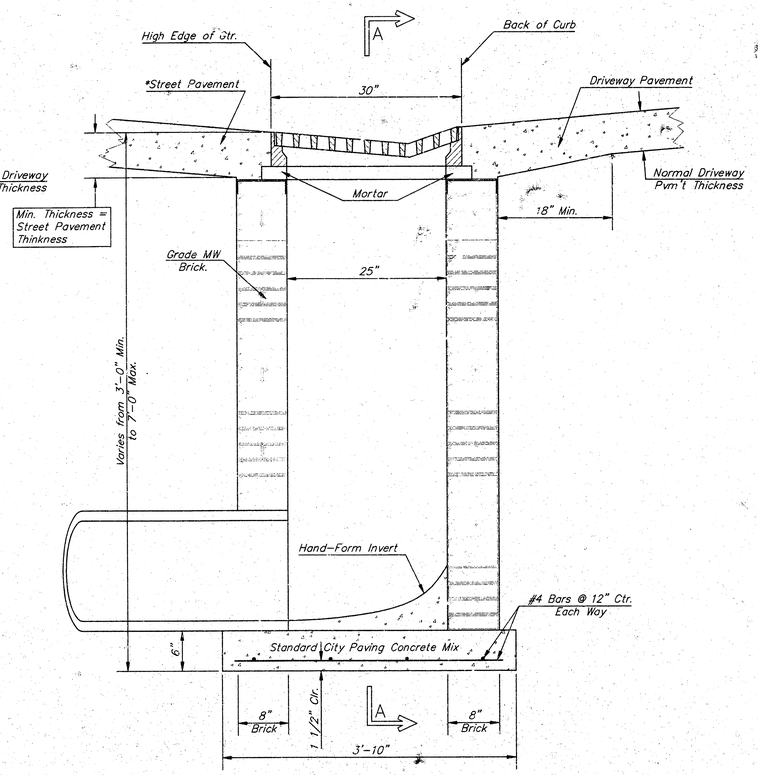

SIDE OUTLET

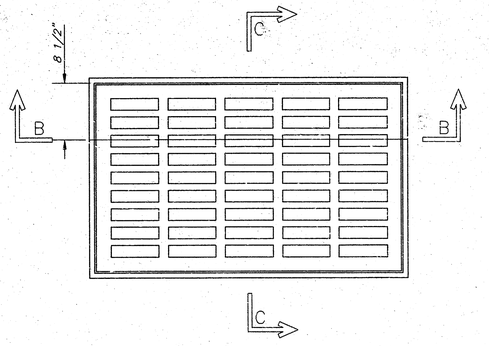

PLAN

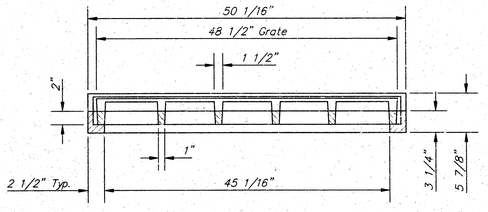

SECTION B–B

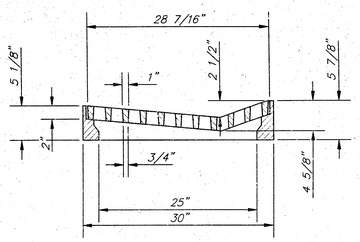

SECTION C–C

DEETER #2095 FRAME & GRATE

TOTAL WEIGHT: 705 lbs.

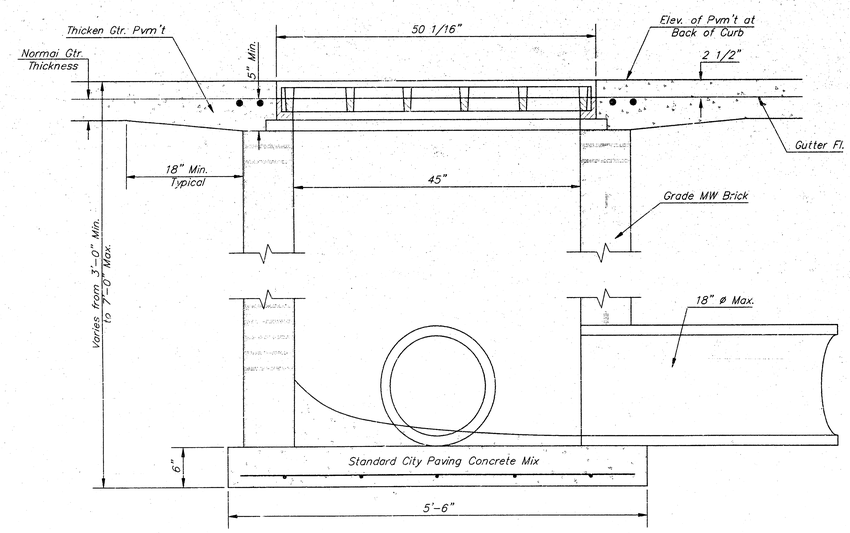

SECTION A–A

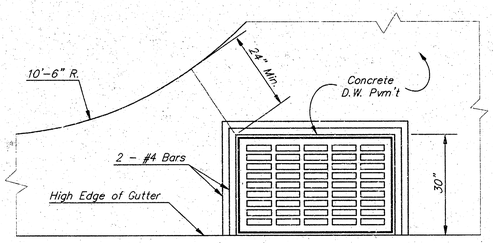

PLAN

GENERAL NOTES

1. Grate frame to be installed on thin mortar cushion to insure full support along brick walls. Concrete used for inlet construction shall be concrete pavement mix.
2. Inlet invert shall be shaped with 8 sack sand mix concrete to create flow channels and to increase hydraulic efficiency such that the inlet will be self cleaning between all inlet and/or outlet pipes.
3. The ends of all pipes installed in inlets shall be cut off flush with the inside face of the inlet wall.
4. Inlet Frame and Grate to be Deeter #2095 of approved equal

PATRICK G. BLEES
ARCHITECTURE PLANNING DESIGN

PATRICK G. BLEES, AIA
NORTHWESTERN BUILDING
219 N. 2ND ST., SUITE 301
MINNEAPOLIS, MN 55401
PHONE: (612) 338-6677
FAX: (612) 338-2995
E-MAIL: info@cmarch.com
CONTACT: GARY FAGERSTROM

CONSULTANTS:

CIVIL ENGINEER
VAN SICKLE ALLEN AND ASSOC
2955 XENIUM LN N, SUITE 10
PLYMOUTH, MN 55441
763-577-9118
THOMAS MADIGAN

STRUCTURAL ENGINEER
VAN SICKLE ALLEN AND ASSOC
2955 XENIUM LN N, SUITE 10
PLYMOUTH, MN 55441
763-577-9105
KEITH JACOBSON

LANDSCAPE ARCHITECT
WESTWOOD PROF. SERVICES, INC.
7599 ANAGRAM DRIVE
EDEN PRAIRIE, MN 55344
952-937-5150
DAN SJORDAL

SEAL:



Slumberland

RIDGE PLAZA
8TH ADDITION
LOTS 4 AND 5, BLOCK B
444 S EMERSON STREET
WICHITA, KS 67209

SHEET TITLE:
CITY OF WICHITA
DRIVEWAY GRATED
INLET SINGLE

REVISIONS:

NO:	DATE:	BY:
2	05/19/04	NO REVISIONS THIS SHEET
3	06/02/04	NO REVISIONS THIS SHEET
4	06/30/04	NO REVISIONS THIS SHEET
5	07/16/04	NO REVISIONS THIS SHEET
6	08/09/04	CITY NO REVISIONS
7	08/20/04	THIS SHEET

PROJECT NO: 03109-15
DRAWING DATE: 08-20-04
DRAWN BY: QAV

8

SHEET 8 OF 10
FILE: 03316 8

COPYRIGHT PATRICK G. BLEES, AIA 2004

PLOTTING GUIDE

COLOR	1	2	3	4	5	6	7	8	9	10	11	12	13	14	15
PEN	35	35	35	35	35	35	35	35	35	35	35	35	35	35	35
STROKE	.018	.018	.018	.018	.018	.018	.018	.018	.018	.018	.018	.018	.018	.018	.018

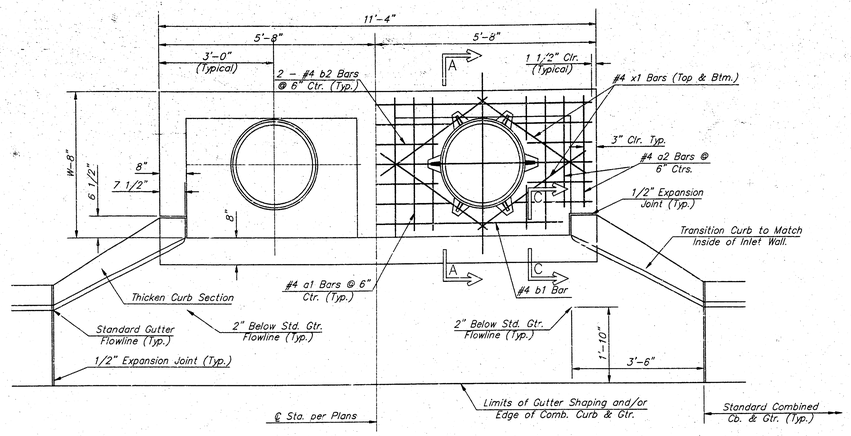

PLAN

*Left Side Shown Without Slab Reinforcing, Right Side Shown With Slab Reinforcing

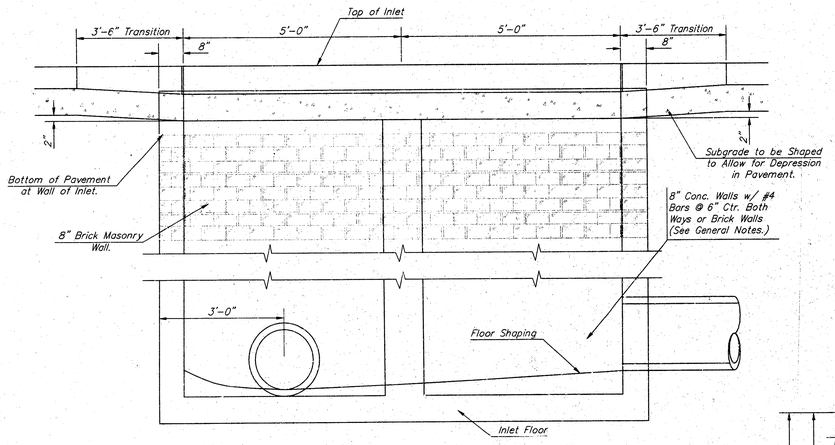

ELEVATION

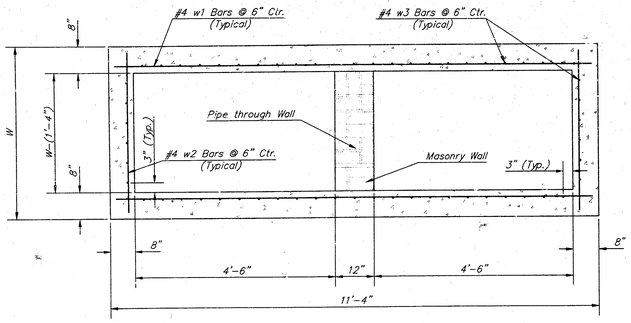

SECTION B--B

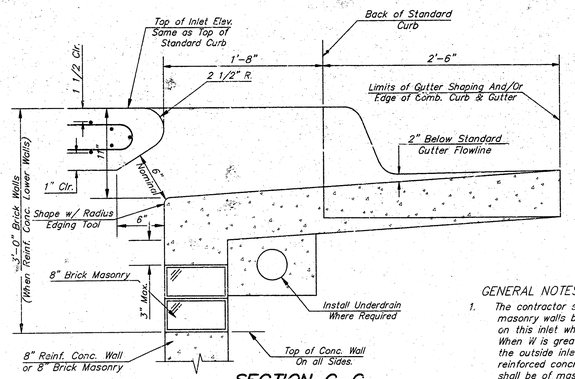

SECTION C-C

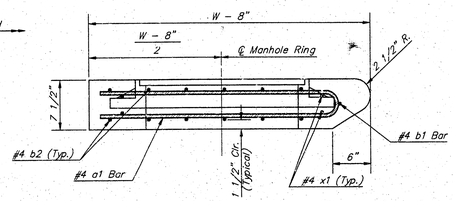

SECTION A-A

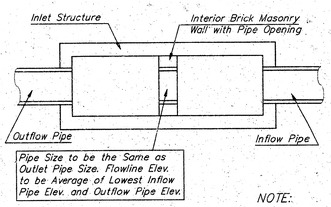

CASE I

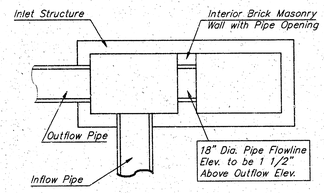

CASE II

NOTE:
Center Wall Pipe Size shall be as Specified in Inlet Construction Notes on the Plan/Profile Sheets for those Cases not Shown Here.

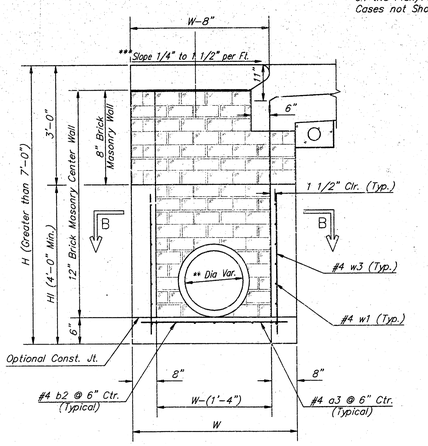

TYPICAL INLET SECTION AT CENTER WALL

(Reinforced Concrete Walls)

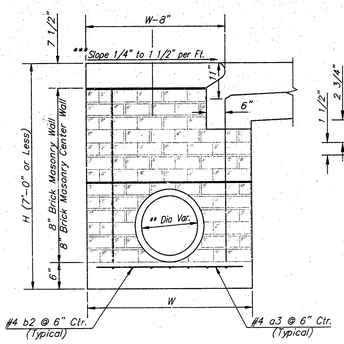

TYPICAL INLET SECTION AT CENTER WALL

(Masonry Walls)

NOTES:

** A center wall opening shall be provided by means of a section of reinforced concrete pipe. See Case I and Case II above.

*** Slope of inlet tops to match sidewalk or parking slopes within limits indictated

PRECAST SLAB AND FLOOR REINFORCING										
		W = 3'-0"		W = 4'-0"		W = 5'-0"		W = 6'-0"		W = 7'-0"	
MARK	SIZE	NO.	LENGTH	NO.	LENGTH	NO.	LENGTH	NO.	LENGTH	NO.	LENGTH
* a1	#4	13	6'-7"	13	8'-7"	13	10'-7"	13	12'-7"	13	14'-7"
a2	#4	4	6'-0"	4	8'-0"	4	10'-0"	4	12'-0"	4	14'-0"
a3	#4	23	4'-1"	23	5'-1"	23	6'-1"	23	7'-1	23	8'-1"
b1	#4	1	9'-9"	1	9'-9"	1	9'-9"	1	9'-9"	1	9'-9"
* b2	#4	23	11'-1"	29	11'-1"	35	11'-1"	41	11'-1"	47	11'-1"
"	#4	16	3'-10"	16	4'-2"	16	4'-6"	16	4'-10"	16	5'-2"
WALL REINFORCING											
		W = 3'-0"		W = 4'-0"		W = 5'-0"		W = 6'-0"		W = 7'-0"	
MARK	SIZE	NO.	LENGTH	NO.	LENGTH	NO.	LENGTH	NO.	LENGTH	NO.	LENGTH
w1	#4	①	11'-1"	①	11'-1"	①	11'-1"	①	11'-1"	①	11'-1"
w2	#4	①	4'-1"	①	5'-1"	①	6'-1"	①	7'-1"	①	8'-1"
w3	#4	52	②	56	②	60	②	64	②	68	②

* Field Bend or Cut Reinforcing as Required for Clearance.

① 4 (HI - 12") (HI - 21") Rounded down to nearest 0.5'

② HI - 3"

GENERAL NOTES:

1. The contractor shall be required to construct 8" brick masonry walls between the concrete inlet base and top on this inlet when W=5'-0" or less and H=7'-0" or more. When W is greater than 5'-0" and H is more than 7'-0" the outside inlet walls below the brick stack shall be reinforced concrete construction and the center wall shall be of masonry construction as shown for the masonry wall option.
2. Inlet invert shall be shaped with 8 sack sand mix concrete to create flow channels and to increase hydraulic efficiency such that the inlet will be self cleaning between all inlet and/or outlet pipes.
3. Concrete tops to be installed on thin mortar cushion to insure full support along brick walls. Concrete tops may be cast in place or precast. Concrete used for inlet construction shall be concrete pavement mix.
4. Inlet top reinforcing shall be spaced on 6" max. centers. Inlet lids shall be notched out as indicated to facilitate construction of curb. Bars in inlet top to be field bent or cut to clear manhole ring.
5. The ends of all pipes installed in inlets shall be cut off flush with the inside face of the inlet wall.

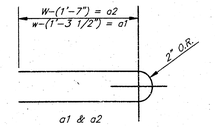

BENDING DIAGRAM

STANDARD CURB INLET PRECAST TOPS			
W	PRE-CAST TOP SIZE	PIPE SIZE	CU. YD. CONC.
3'-0"	3'-8" 11'-4" 7 1/2"	21" & SMALLER	0.83±
4'-0"	4'-8" 11'-4" 7 1/2"	24" & 30"	1.09±
5'-0"	5'-8" 11'-4" 7 1/2"	36" & 42"	1.35±
6'-0"	6'-8" 11'-4" 7 1/2"	48" & 54"	1.61±
7'-0"	7'-8" 11'-4" 7 1/2"	60" & 66"	1.87±

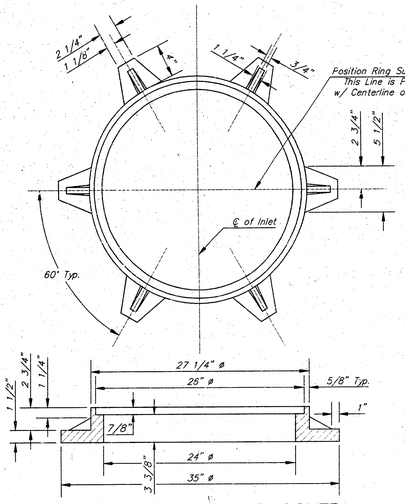

MANHOLE RING AND COVER

Weight = 180 lbs.

*See City of Wichita Standard Manhole Ring and Cover Detail Sheet for Cover Details to Be Used With Inlet Frame.

PATRICK G. BLEES

ARCHITECTURE PLANNING DESIGN

PATRICK G. BLEES, AIA
NORTHWESTERN BUILDING
219 N. 2ND ST., SUITE 301
MINNEAPOLIS, MN 55401
PHONE: (612) 338-6677
FAX: (612) 338-2995
E-MAIL: info@pmarch.com
CONTACT: GARY FAGERSTROM

CONSULTANTS:

CIVIL ENGINEER
VAN SICKLE ALLEN AND ASSOC
2955 XENIUM LN N, SUITE 10
PLYMOUTH, MN 55441
763-577-9118
THOMAS MADIGAN

STRUCTURAL ENGINEER
VAN SICKLE ALLEN AND ASSOC
2955 XENIUM LN N, SUITE 10
PLYMOUTH, MN 55441
763-577-9105
KEITH JACOBSON

LANDSCAPE ARCHITECT
WESTWOOD PROF. SERVICES, INC.
7599 ANAGRAM DRIVE
EDEN PRAIRIE, MN 55344
952-937-5150
DAN SJOBERG

SEAL:

THOMAS J. MADIGAN LICENSED 16297 KANSAS PROFESSIONAL ENGINEER 8/20/04

slumberland

RIDGE PLAZA
8TH ADDITION
LOTS 4 AND 5, BLOCK B
444 S EMERSON STREET
WICHITA, KS 67209

SHEET TITLE:

CITY OF WICHITA

STANDARD TYPE 1-A

CURB INLET 10'-0" OPENING

REVISIONS:

NO:	DATE:	BY:
2	05/19/04	NO REVISIONS THIS SHEET
3	06/02/04	NO REVISIONS THIS SHEET
4	06/30/04	NO REVISIONS THIS SHEET
5	07/16/04	NO REVISIONS THIS SHEET
6	08/09/04	CITY NO REVISIONS
7	08/20/04	THIS SHEET

PROJECT NO: 03109-15
DRAWING DATE: 08-20-04
DRAWN BY: QAV

9

SHEET 9 OF 10

FILE: 03316 9

COPYRIGHT PATRICK G. BLEES, AIA 2004

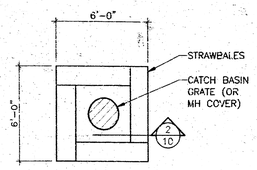

1/10 STRAWBALES @ STORM WATER INLET PROTECTION

NO SCALE

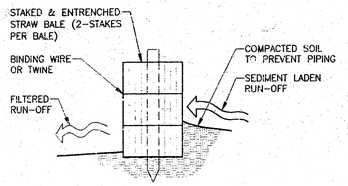

2/10 STRAWBALE BARRIER

NO SCALE

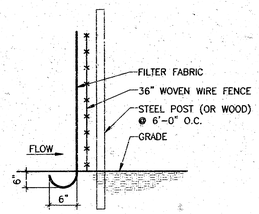

3/10 SILT FENCE DETAIL

NO SCALE

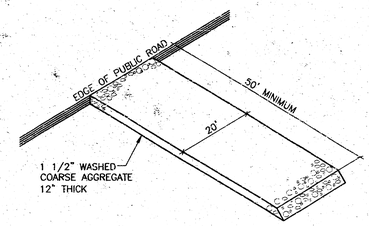

4/10 GRAVEL CONSTRUCTION ENTRANCE

NO SCALE

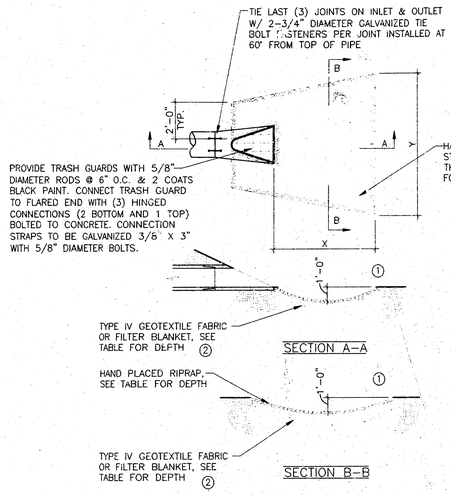

PROVIDE RIPRAP & GRANULAR FILTER AS FOLLOWS							
				CLASS III		CLASS IV	
PIPE DIA.	X	Y	18" DEPTH RIPRAP (CY)	9" DEPTH GRAN. FILTER (CY)	24" DEPTH RIPRAP (CY)	12" DEPTH GRAN. FILTER (CY)
18"	10'	12'	5.9	3.0	--	--
24"	12	14'	8.3	4.2	--	--
48"	20'	21'	--	--	25.8	12.9

5/10 RIPRAP AT RCP FLARED END SECTION (FES)

NO SCALE

NOTES:
1. FOR PIPES GREATER THAN OR EQUAL TO 30", USE 1.5'.
2. THE CONTRACTOR, AT HIS OPTION, MAY SUBSTITUTE A GEOTEXTILE FABRIC, SPEC. 3601, FOR THE GRANULAR FILTER BLANKET U.N.O. THE FABRIC SHOULD COVER THE AREA OF THE RIPRAP AND EXTEND UNDER THE CULVERT APRON 3 FEET.

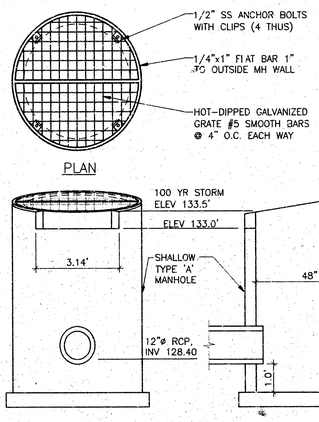

6/10 DETENTION POND, OUTLET STRUCTURE

NO SCALE

PATRICK G. BLEES

ARCHITECTURE PLANNING DESIGN

PATRICK G. BLEES, AIA
NORTHWESTERN BUILDING
219 N. 2ND ST., SUITE 301
MINNEAPOLIS, MN 55401
PHONE: (612) 338-6677
FAX: (612) 338-2995
E-MAIL: info@pgarch.com
CONTACT: GARY FAGERSTROM

CONSULTANTS:

CIVIL ENGINEER
VAN SICKLE ALLEN AND ASSOC
2955 XENIUM LN N, SUITE 10
PLYMOUTH, MN 55441
763-577-9118
THOMAS MADIGAN

STRUCTURAL ENGINEER
VAN SICKLE ALLEN AND ASSOC
2955 XENIUM LN N, SUITE 10
PLYMOUTH, MN 55441
763-577-9105
KEITH JACOBSON

LANDSCAPE ARCHITECT
WESTWOOD PROF. SERVICES, INC.
7599 ANAGRAM DRIVE
EDEN PRAIRIE, MN 55344
952-937-5150
DAN SJORDAL

SEAL:



slumberland

RIDGE PLAZA
8TH ADDITION
LOTS 4 AND 5, BLOCK B
444 S EMERSON STREET
WICHITA, KS 67209

SHEET TITLE:

DETAILS

REVISIONS:

NO:	DATE:	BY:
2	05/19/04	NO REVISIONS THIS SHEET
3	06/02/04	NO REVISIONS THIS SHEET
4	06/30/04	NO REVISIONS THIS SHEET
5	07/16/04	NO REVISIONS THIS SHEET
6	08/09/04	CITY
7	08/20/04	NO REVISIONS THIS SHEET

PROJECT NO: 03109-15
DRAWING DATE: 08-20-04
DRAWN BY: GAV

10

SHEET 10 OF 10

FILE: 03316 10

COPYRIGHT PATRICK G. BLEES, AIA 2004

PLOTTING GUIDE

COLOR	1	2	3	4	5	6	7	8	9	10	11	12	13	14	15
PEN	.25	.25	.35	.35	.70	1.02	.25	.10	.13	.25	.51	.36	.25	.18	.25
SHADE	100%	100%	100%	100%	100%	100%	100%	100%	100%	100%	100%	100%	100%	100%	100%