STORM WATER SEWER TO SERVE

THE COLLECTIVE

Block 1, Lot 1

Private Project Number: 1452 PPS (607861)

CITY OF WICHITA, KANSAS

Jim Armour, P.E. City Engineer

June 2004

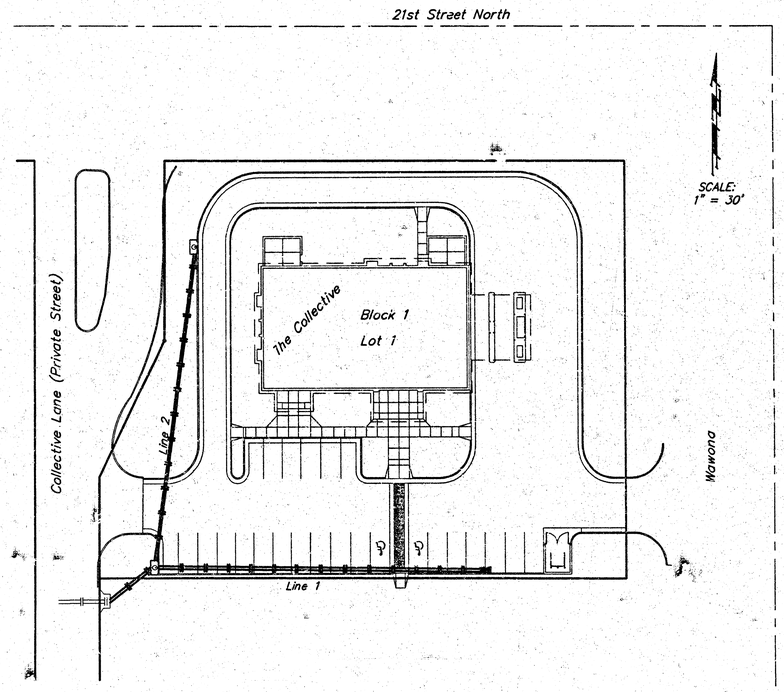

Index

Cover Sheet	1
Plan/Profile Sheet	2
Drop Inlet & Sediment Barrier Detail	3
Curb Inlet Detail	4
BMP Erosion Details	5
Copy Of Plat	6

APPROVED AS NOTED
BY CITY ENGINEER OF WICHITA

Storm Sewers VRH 6/10/04

NOTE TO CONTRACTORS

Installation, inspection and testing for this project is to be provided by a Licensed Consulting Engineering Firm under contract with the Owner/Developer. Said inspection to be in accordance with the City of Wichita standard construction engineering practices and certified by a Licensed Professional Engineer. No work shall be performed in dedicated easements or public right-of-way by the Contractor without such inspection nor shall any work be commenced without written authorization by the City Engineer. All Construction and Materials shall comply with the City of Wichita Specifications and Standards (on file and available in the City Engineer's Office).

AS-BUILT
3-22-05
Date
KE MELLER
Signed

Location Map

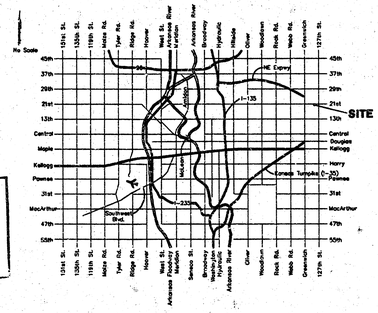

Bench Marks:

1. Site Bench Mark.
"X" Chiseled on Top of Concrete approximately 2' Northeast of the Northeast corner of Lot 1, Block 1, The Collective, an Addition to Wichita, Sedgwick County, Kansas.

   Elev. = 196.01 (City Datum)

2. Greenwich and 17th Street North.
City of Wichita Bench Mark.
West side of Greenwich in railroad signal base.

   Elev. = 183.19 (City Datum)

Legal Description

Lots 1, Block 1, The Collective, an Addition to Wichita, Sedgwick County, Kansas

LEE M. ULLUM
LICENSED
17034
6-10-04
KANSAS
PROFESSIONAL ENGINEER

General Notes

1. Contractor will be required to provide notice to utility companies a minimum of forty-eight (48) hours prior to any excavation, as follows:

   Kansas One-Call 687-2470

   The Contractor must notify the following in case of an emergency:

Cox Communications	262-4270
Kansas Gas Service Company	1-888-482-4950
Westar Energy (Electric)	383-8650
Aquila Energy (Gas)	1-800-303-0357
Southwestern Bell Telephone Company	1-800-286-8313
City of Wichita Water Department	262-6000
City of Wichita Sewer Maint. (San. Sewer)	262-6000
City of Wichita Storm Sewer Maint.	268-4090
City of Wichita Traffic Maint.	268-4034

2. All disturbed R/W areas not intended for pavement or sidewalk construction shall be seeded with Kansas Premium Fescue Blend at a rate of 8 lb./1000 Sq. Ft., fertilized with a 16-20-6 ratio at a rate of 4 lb./1000 Sq. Ft., and mulched with Prairie Hay at a rate of 92 lb./1000 Sq. Ft. Mulch shall be "patted" with forks or punched into soil to reduce loss due to wind.

3. Utility service lines, poles, valve boxes, meters, et cetera are to be adjusted as necessary by others prior to construction unless the plans specifically call for their adjustment by the Contractor or unless the plans specifically identify a utility to be adjusted by its owner during construction. Existing utilities and their location, as shown on the plans represent the best information obtainable for design and shall be field verified. The contractor will be required to work around existing utilities with in the right-of-way which do not conflict with proposed construction.

4. Properties within the project limits may have underground sprinkler systems which may conflict with new construction. Contractor will be required to remove such improvements should they not be removed by their owner at the time of construction of the project. The Contractor will be required to replace/re-install all sprinkler heads and/or valves such that the sprinkler system is in operational order. Portions of underground sprinkler systems not in conflict with new construction shall be protected from damage and shall remain in place. All work in connection with underground sprinkler systems shall be considered as subsidiary to the contract pay items of work.

5. Contractor shall not start work on the project until the project inspector is assigned to the project and is present on the site. Contractor shall not start on the project until all necessary bonds and permits have been obtained. Bonds may include but are not limited to Statutory, Performance & Maintenance for areas in public right-of-way and easement. For projects within the City of Wichita contact Tom Mason (268-4574). Any work done without inspection will be required to be uncovered for inspection.

6. Rubble from the removal of miscellaneous structures and excess excavation which is to be wasted shall be disposed of on sites to be provided by the Contractor. These sites shall be approved by the Engineer as to suitability, appearance and site location. Locations that, in the opinion of the Engineer, will leave an unsightly appearance will not be approved. All disposal sites must be approved by the Kansas Department of Health and Environment. Material either stockpiled or disposed of in a flood plain would require a Kansas State Board of Agriculture permit. Any material dumped in waters of the United States or wetlands is subject to U.S. Corps. of Engineers permitting regulations. Any material buried or stockpiled beyond approved construction limits would require additional archaeological investigations unless buried in a previously approved borrow location.

7. All storm sewers and appurtenances shall be installed in accordance with the most recent edition of City of Wichita, Kansas Standard Specifications for the Construction of City Projects.

BAUGHMAN COMPANY P.A.
ENGINEERING, SURVEYING, & PLANNING
316-262-7271 • 315 ELLIS • WICHITA, KANSAS 67211

Bench Marks:

1. Site Bench Mark.
   "X" Chiseled on Top of Concrete approximately 2' Northeast of the Northeast corner of Lot 1, Block 1, The Collective, an Addition to Wichita, Sedgwick County, Kansas.

   Elev. = 196.01 (City Datum)

2. Greenwich and 17th Street North.
   City of Wichita Bench Mark.
   West side of Greenwich in railroad signal base.

   Elev. = 183.19 (City Datum)

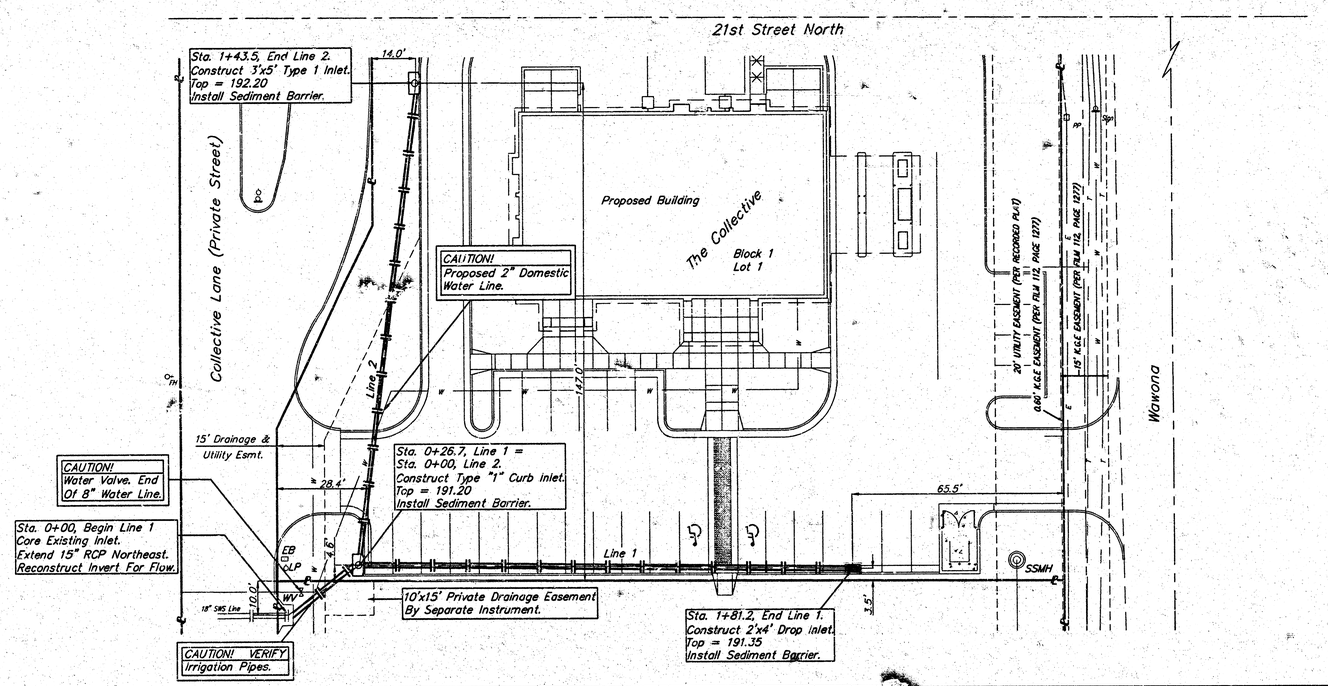

SCALE:
1" = 20' HORIZONTAL
1" = 5' VERTICAL

Contractor Shall Follow All Applicable Best Management Practices (BMP) For Erosion Control,

Contractor To Use Extreme Caution When Excavating Near Utility Lines. Contractor To Hand Dig To Expose All Utility Lines Prior To Storm Sewer Installation. Verify Depth To Determine Conflict If Any.

LEE M. ULLUM LICENSED 17034 KANSAS PROFESSIONAL ENGINEER 6-10-04

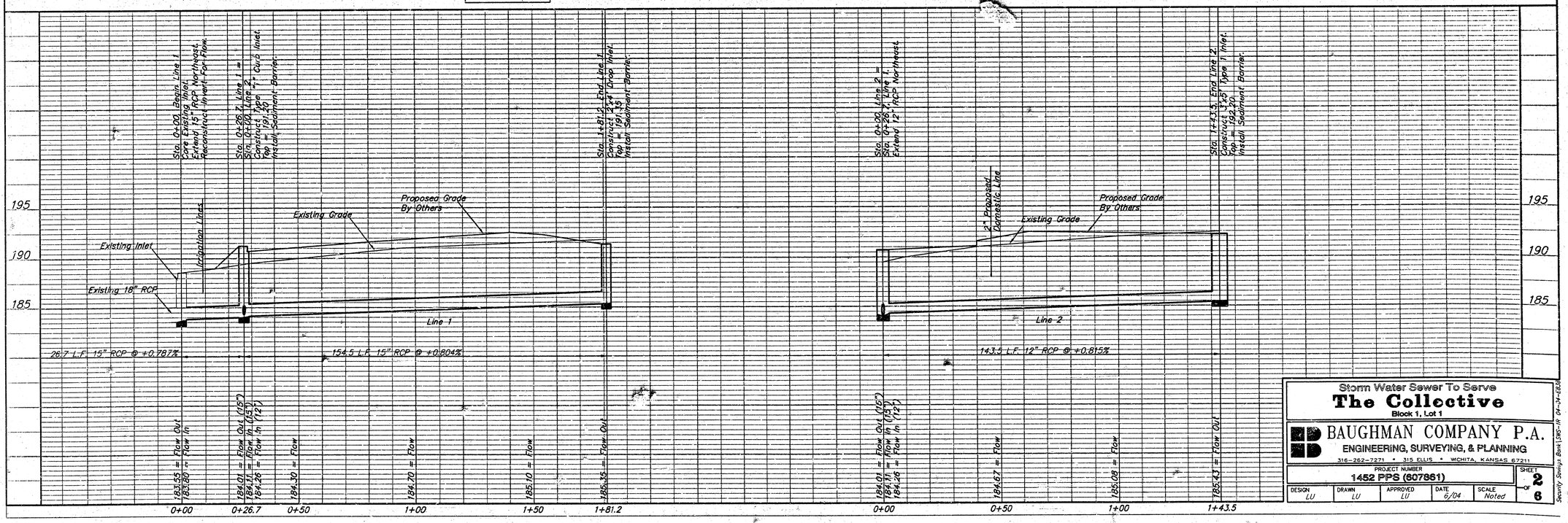

Storm Water Sewer To Serve
The Collective
Block 1, Lot 1

BAUGHMAN COMPANY P.A.
ENGINEERING, SURVEYING, & PLANNING
316-262-7271 • 315 ELLIS • WICHITA, KANSAS 67211

PROJECT NUMBER					SHEET
1452 PPS (607861)					2 OF 6
DESIGN LU	DRAWN LU	APPROVED LU	DATE 6/04	SCALE Noted	

Security Savings Bank \SWS-IR 04-04-E8.38

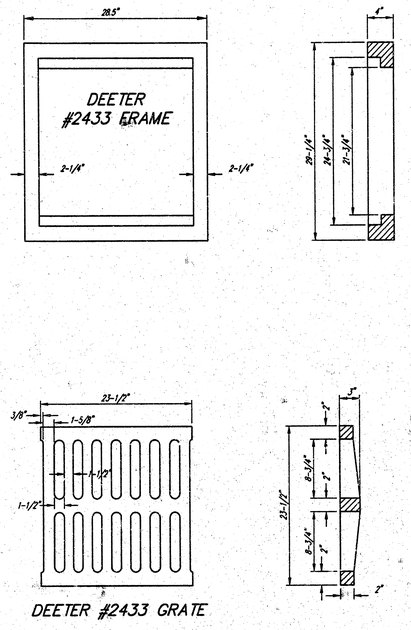

DEETER #2433 GRATE

NOTE: Grates shall be imprinted on the top surface with "CITY OF WICHITA" using letters at least 1" in height. Other marking methods may be approved by the engineer.

24" x 24" Frame and Grate Detail

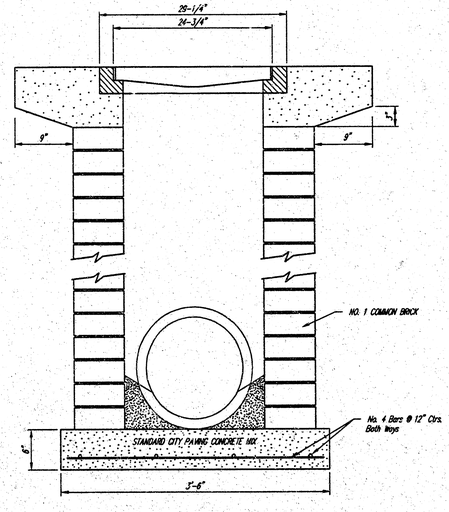

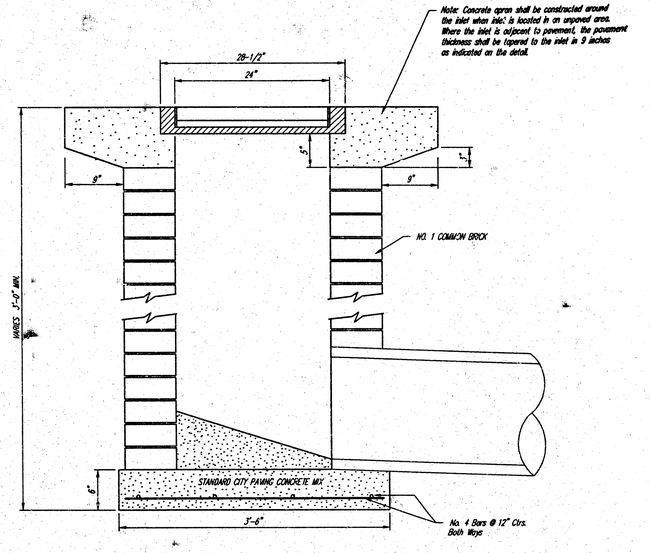

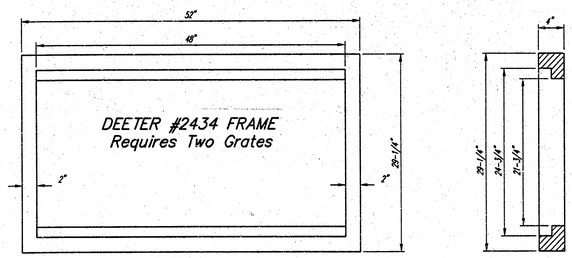

Double 24" x 24" Frame Detail

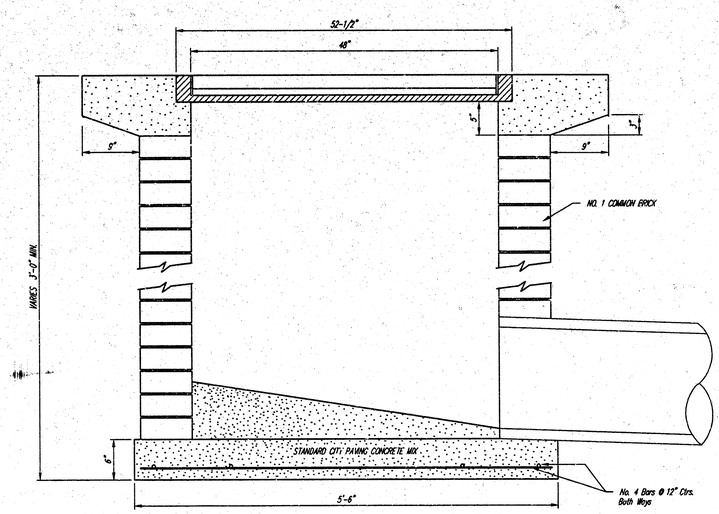

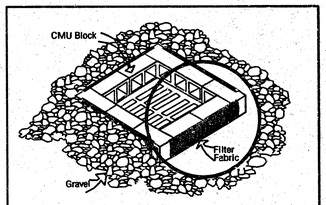

NOTES:

Frequent maintenance is required to minimize short-circuiting and to remove sediment deposits and buildup.

Wrap filter fabric around all CMU block and backfill with 2"-3" gravel rock to allow sediment deposits.

DO NOT cover inlet or grate with filter fabric.

INLET PROTECTION

Storm Drain with Gravel Apron

City of Wichita Standard

Drop Inlet

BAUGHMAN COMPANY P.A.

ENGINEERING, SURVEYING, & PLANNING

316-262-7271 • 315 ELLIS • WICHITA, KANSAS 67211

PROJECT NUMBER					SHEET
1452 PPS (607861)					3 OF 6
DESIGN C.O.W.	DRAWN Staff	APPROVED	DATE 6/04	SCALE NONE	

Security Savings Bank\Drop\Inl2 04-04-E838

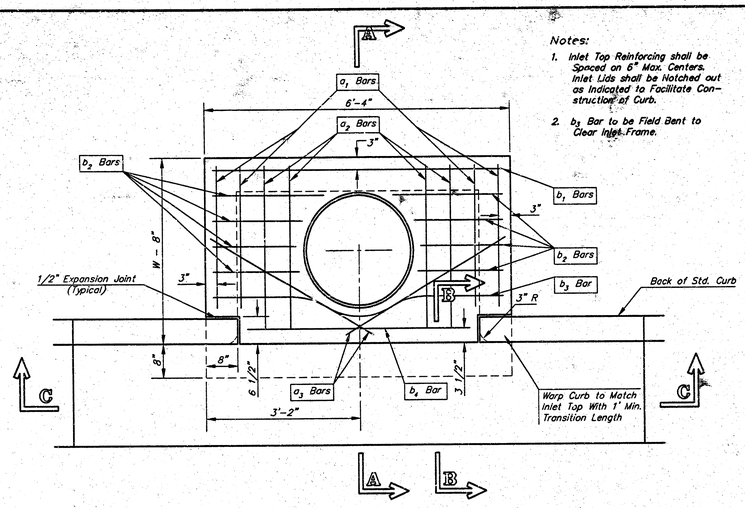

PLAN

Notes:

1. Inlet Top Reinforcing shall be Spaced on 6" Max. Centers. Inlet Lids shall be Notched out as Indicated to Facilitate Construction of Curb.
2. b_2 Bar to be Field Bent to Clear Inlet Frame.

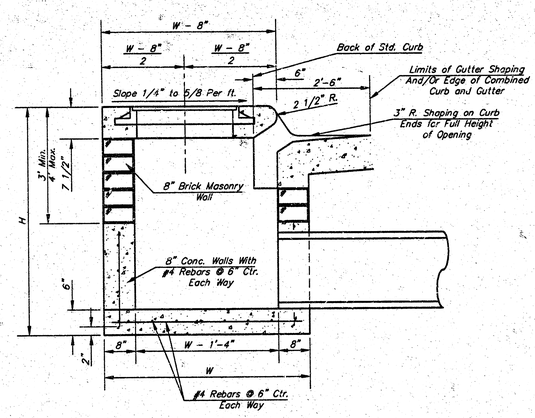

SECTION A–A

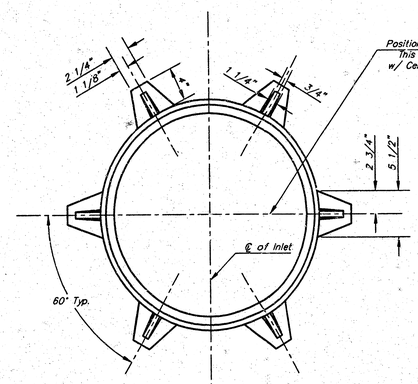

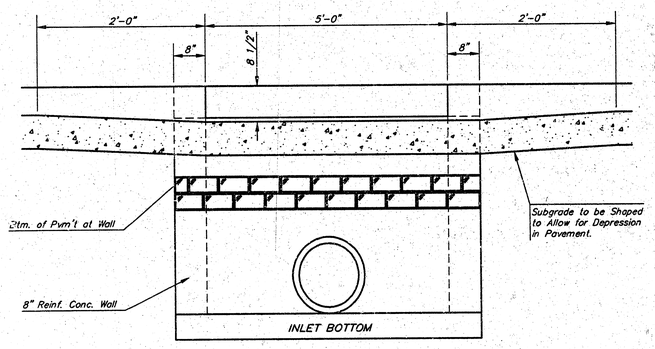

SECTION C–C

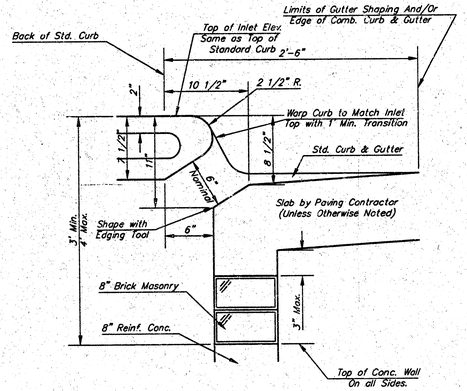

SECTION B–B

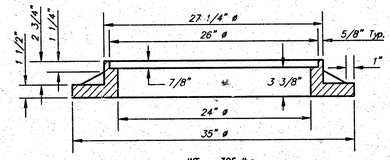

WT. = 325 lbs.

MANHOLE RING AND COVER

*See City of Wichita Standard Manhole Ring and Cover Detail Sheet for Cover Details to Be Used With Inlet Frame.

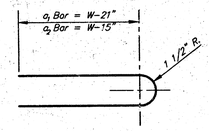

BENDING DIAGRAM

STEEL SCHEDULE

BAR		a_1	a_2	a_3	b_1 W=4'-4"	b_1 W=5'-4"	b_1 W=6'-4"	b_1 W=7'-4"	b_1 W=8'-4"	b_2	b_3	b_4	Wt. Lbs.
NUMBER		4	4	2	1	3	5	7	9	6	1	1	
SIZE		#4	#4	#4	#4	#4	#4	#4	#4	#4	#4	#6	
LENGTH	W=4'-4"	5'-7"	6'-7"	4'-0"	6'-1"	–	–	–	–	1'-9"	6'-2"	4'-8"	60±
	W=5'-4"	7'-7"	8'-7"	5'-0"	–	6'-1"	–	–	–	1'-9"	6'-2"	4'-8"	81±
	W=6'-4"	9'-7"	10'-7"	6'-0"	–	–	6'-1"	–	–	1'-9"	6'-2"	4'-8"	101±
	W=7'-4"	11'-7"	12'-7"	7'-0"	–	–	–	6'-1"	–	1'-9"	6'-2"	4'-8"	121±
	W=8'-4"	13'-7"	14'-7"	8'-0"	–	–	–	–	6'-1"	1'-9"	6'-2"	4'-8"	141±

Note: a_3 Bars to be Placed Approx. 2" Below Top of Inlet Cover.

STANDARD CURB INLET PRECAST TOPS			
W	PRE-CAST TOP SIZE	PIPE SIZE	CU. YD. CONC.
4'-4"	3'-8" 6'-4" 7 1/2"	21" & SMALLER	0.38±
5'-4"	4'-8" 6'-4" 7 1/2"	24" & 30"	0.51±
6'-4"	5'-8" 6'-4" 7 1/2"	36" & 42"	0.64±
7'-4"	6'-8" 6'-4" 7 1/2"	48" & 54"	0.77±
8'-4"	7'-8" 6'-4" 7 1/2"	60" & 66"	0.90±

GENERAL NOTES

1. Concrete tops to be installed on thin mortar cushion to insure full support along brick walls. Concrete tops may be cast in place or precast. Concrete used for inlet construction shall be concrete pavement mix.
2. Contractor shall have the option of constructing 8" brick masonry walls between the concrete inlet base and top on this inlet when W=6'-4" and H=7'-0" or less.
3. Inlet invert shall be shaped with 8 sack sand mix concrete to create flow channels and to increase hydraulic efficiency such that the inlet will be self cleaning between all inlet and/or outlet pipes.
4. The ends of all pipes installed in inlets shall be cut off flush with the inside face of the inlet wall.

CITY OF WICHITA, KANSAS

TYPE 1 CURB INLET

INLET OPENING = 6'X5'-0"

BAUGHMAN COMPANY P.A.
ENGINEERING, SURVEYING, & PLANNING
316-262-7271 • 315 ELLIS • WICHITA, KANSAS 67211

PROJECT NUMBER	SHEET
1452 PPS (607881)	4 OF 6

DESIGN	DRAWN	APPROVED	DATE	SCALE
C.O.W.	STAFF		6/04	NONE

Security Savings Bank/Sub I-3 04-04-0338

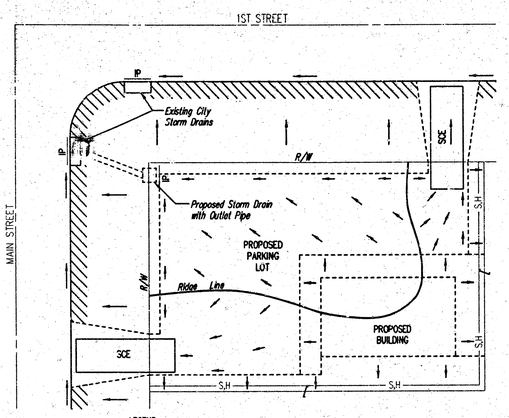

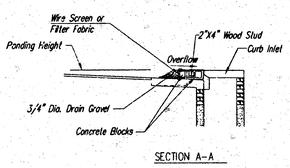

SECTION A-A

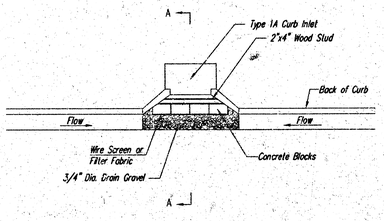

CURB INLET GRAVEL FILTERS
(INLET PROTECTION–RESIDENTIAL STREETS ONLY)

NOTE: Other types of curb inlet protection may be approved by the city so long as equal protection is provided.

A gravel inlet filter shall be installed at sump locations on residential streets. This type of protection is not to be used on arterial or collector streets at any time that it would pose an undue traffic hazard.

Instructions for Installing:

STEP 1: Place concrete blocks around the inlet as shown on drawing. Insert 2x4 board as shown.
STEP 2: Wrap 1/2" mesh wire screen around the concrete blocks.
STEP 3: Place 1" to 1-1/2" diameter rock around the blocks and wire screen. Be sure the rock extends down from the top of the concrete block.
STEP 4: To prevent damage to vehicles, signs warning drivers about the structures may be necessary. An alternative installation is the use of gravel bags supported by a 2"x4" board to prevent collapsing.

Use of rock with diameters smaller than 1" in the bag may result in clogging of pores and reduce the amount of water flowing into an inlet.

Maintenance:

All curb inlet gravel filters shall be inspected and repaired after each runoff event. Sediment deposits are to be removed once material is within 8 cm (3 inches) of the top of any block. Periodically, the gravel shall be raked to increase infiltration and filtering of runoff waters. Accumulated sediment is to be removed immediately from roads and streets.

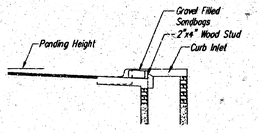

SECTION B-B

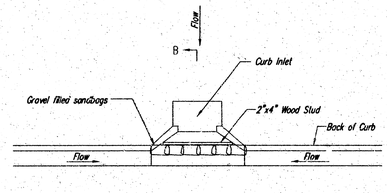

CURB INLET SANDBAG FILTERS
(INLET PROTECTION)

NOTE: Other types of curb inlet protection may be approved by the City so long as equal protection is provided.

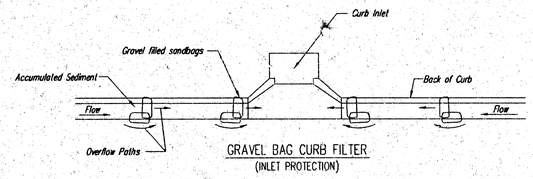

GRAVEL BAG CURB FILTER
(INLET PROTECTION)

NOTE: Place two or more sets of bags in a manner that results in mutual support. The flow line bag must be lower than top of curb.

CURB SEDIMENT TRAPS

When inlets are located on streets having a grade (i.e., sump conditions do not exist), installing gravel (or sand) bags in the gutter flow line to create small sediment traps can be considered. Gravel bags are recommended over sand bags to allow for drainage.

If the spacing between bags becomes too large, little sediment may be trapped. Spacing of bags should be completed using the table or graph that illustrates placement distances based upon street slope. When installed in the gutter, bag tops must be lower than the sidewalk.

Spacing:

Gravel bags are to be placed according to street grades using the following table or graph that appears below.

GRADE (%)	SPACING (FEET)
0.5	75
1.0	45
2.0	18
3.0	12
4.0	9
5.0	6

Maintenance:

Collected sediment shall be removed after every runoff event. Bags that are destroyed by vehicular traffic or through natural deterioration are to be immediately replaced.

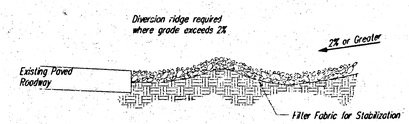

SECTION C-C

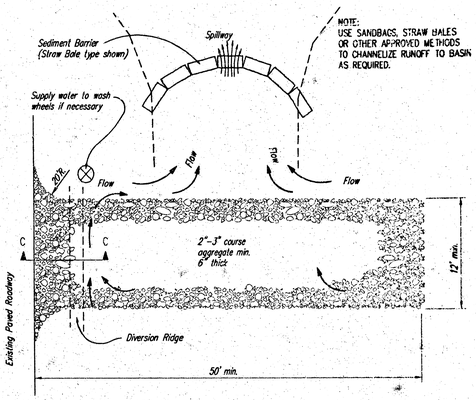

STABILIZED CONSTRUCTION ENTRANCE

NOTES:

1. THE ENTRANCE SHALL BE MAINTAINED IN A CONDITION THAT WILL PREVENT TRACKING OR FLOWING OF SEDIMENT ONTO PUBLIC RIGHTS-OF-WAY. THIS MAY REQUIRE TOP DRESSING, REPAIR AND/OR CLEANOUT OF ANY MEASURES USED TO TRAP SEDIMENT.
2. WHEN NECESSARY, WHEELS SHALL BE CLEANED PRIOR TO ENTRANCE ONTO PUBLIC RIGHT-OF-WAY.
3. WHEN WASHING IS REQUIRED, IT SHALL BE DONE ON AN AREA STABILIZED WITH CRUSHED STONE THAT DRAINS INTO AN APPROVED SEDIMENT TRAP OR SEDIMENT BASIN, AS SHOWN ABOVE.
4. DRIVE ENTRANCES ONTO RESIDENTIAL LOTS WILL NOT BE REQUIRED TO HAVE THE SEDIMENT BARRIER SHOWN, BUT WHEEL WASHING MAY BE REQUIRED IF STABILIZED ENTRANCE IS NOT SUFFICIENT TO KEEP MUD FROM BEING TRACKED ONTO ADJACENT STREET. ENTRANCE SHALL EXTEND FROM BACK OF CURB TO DWELLING.

General Notes

1. This standard detail sheet is a part of your building permit. The BMP's shown on this sheet are considered minimum standards. Whenever sediment enters the streets, storm sewers, ditches, or ponds, contractor will install additional BMP's, as needed, to correct the problem.
2. Follow these general principals on all commercial building sides.
3. The soil erosion BMP's shown hereon must be in place at all times during construction until such time as the site is re-established with paving or grass.
4. Failure to install, protect, and maintain BMP's are violations of Section 16.32 of the City Code and will subject the contractor to the penalties provided therein. Included with your permit is an orange "notice" sign that must be posted on-site in a conspicuous place at all times during construction. This sign is provided to assist you in the maintenance of BMP'S.
5. Back of Curb Protection: Can include hay bale, silt fence, or Curlex barrier, as shown on City BMP standard details. This BMP must remain in place until the area between the curb and right-of-way line has been permanently stabilized.
6. The General Contractor is responsible for the installation and maintenance of all BMP's.
7. Should the site abut a lake, BMP's will be installed to prevent sediment from entering the lake.
8. Any mud inadvertently tracked onto any street will be cleaned up by the general contractor at the end of each day's work.

CITY OF WICHITA

SOIL EROSION BMP DETAILS

CHRISTOPHER M. CARRIER, P.E.
STORM WATER ENGINEER

PROJECT NUMBER	CCA NO.
1452 PPS (607861)	NA
DATE: 6/04	SHEET 5 OF 6

PC 132-3

THE COLLECTIVE

AN ADDITION TO WICHITA, SEDGWICK COUNTY, KANSAS

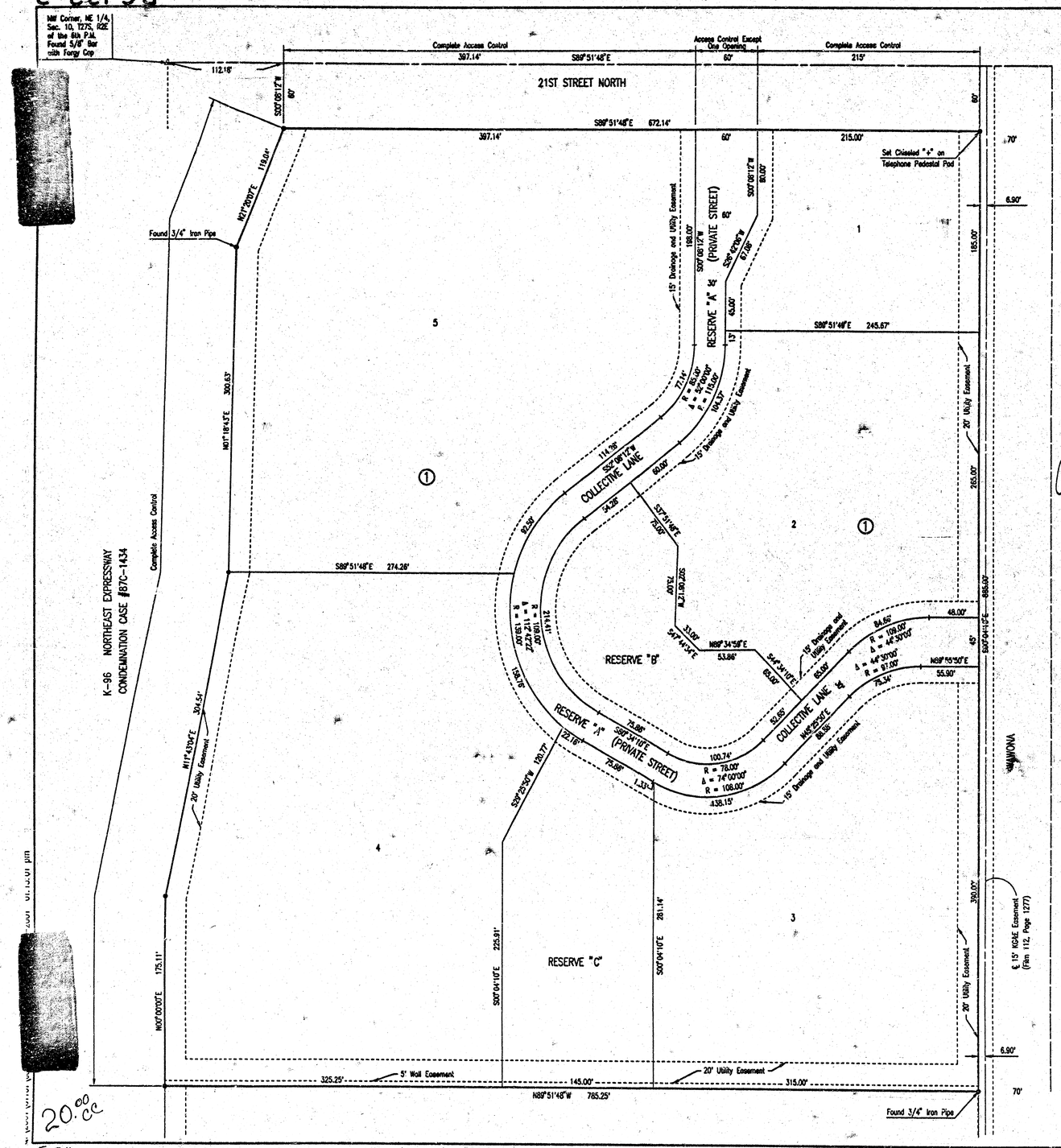

SCALE : 1" = 50'

● = 3/4" IRON PIPE W/PEC CAP UNLESS OTHERWISE NOTED

B.M. – STEPPED SPIKE IN NORTH SIDE OF POWER POLE ON SOUTHWEST CORNER OF 21ST STREET NORTH AND WAHOONA, 779' EAST AND 48' SOUTH OF NORTH 1/4 CORNER, SECTION 10, T27S, R2E.

ELEV. = 1384.72 N.G.V.D.
ELEV. = 197.32 (CITY DATUM)

STATE OF KANSAS } SS
COUNTY OF SEDGWICK }

WE, PROFESSIONAL ENGINEERING CONSULTANTS, P.A., ENGINEERS AND SURVEYORS IN AFORESAID STATE AND COUNTY, DO HEREBY CERTIFY THAT OF THIS 6TH DAY OF NOVEMBER, 2001, WE HAVE SURVEYED AND PLATTED THE COLLECTIVE, AN ADDITION TO WICHITA, SEDGWICK COUNTY, KANSAS, INTO LOTS, BLOCK AND RESERVES, THE SAME BEING DESCRIBED AS FOLLOWS:

LOTS 1, 2 AND 3, BLOCK 1, LANZRATH ADDITION TO SEDGWICK COUNTY, KANSAS, EXCEPT THOSE PORTIONS OF SAID LOTS CONDEMNED FOR HIGHWAY IN DISTRICT COURT CONDEMNATION CASE #87C-1434.

ALL PORTIONS OF LANZRATH ADDITION TO SEDGWICK COUNTY, KANSAS, WITHIN THE ABOVE DESCRIBED TRACT OF LAND ARE HEREBY VACATED AND REPLATTED BY VIRTUE OF K.S.A. 12-512(a) AMENDED.

JAMES R. BECKETT
REGISTERED
11-6-01
LS-832
KANSAS
LAND SURVEYOR

JAMES R. BECKETT, R.L.S. NO. 832
PROFESSIONAL ENGINEERING CONSULTANTS, P.A.

KNOW ALL MEN BY THESE PRESENTS THAT WE, THE UNDERSIGNED PROPERTY OWNERS OF THE LAND AS ABOVE SET FORTH IN THE SURVEYOR'S CERTIFICATE, HAVE CAUSED THE LAND TO BE SURVEYED AND PLATTED INTO LOTS, BLOCK AND RESERVES, THE SAME TO BE KNOWN AS THE COLLECTIVE, AN ADDITION TO WICHITA, SEDGWICK COUNTY, KANSAS.

EASEMENTS FOR THE CONSTRUCTION AND MAINTENANCE OF PUBLIC UTILITIES AND DRAINAGE ARE HEREBY GRANTED.

THE 5 FOOT WALL EASEMENT ALONG THE SOUTH LINE OF BLOCK 1 IS HEREBY PLATTED FOR THE CONSTRUCTION AND MAINTENANCE OF A PRIVATE WALL. UTILITIES AND DRAINAGE MAY CROSS THE WALL EASEMENT.

ALL ABUTTERS RIGHT OF ACCESS TO AND FROM 21ST STREET NORTH AND K-96 NORTHEAST EXPRESSWAY OVER AND ACROSS THE NORTH AND WEST LINE OF BLOCK 1 IS HEREBY GRANTED TO THE CITY OF WICHITA, PROVIDED HOWEVER THAT BLOCK 1 SHALL HAVE ACCESS TO 21ST STREET NORTH AT ONE LOCATION AS SHOWN.

RESERVE "A" IS HEREBY PLATTED FOR PRIVATE STREET, DRAINAGE, LANDSCAPING, AND UTILITIES. THE PRIVATE STREET WITHIN RESERVE "A" IS TO PROVIDE INGRESS AND EGRESS TO 21ST STREET NORTH AND WAHOONA TO LOTS 1 THROUGH 5, BLOCK 1, THE COLLECTIVE. RESERVES "B" AND "C" ARE HEREBY PLATTED FOR PEDESTRIAN IMPROVEMENTS, DRAINAGE, LANDSCAPING AND UTILITIES CONFINED TO EASEMENTS. RESERVES "A", "B" AND "C" SHALL BE OWNED AND MAINTAINED BY AN OWNERS ASSOCIATION TO BE FORMED WITHIN THE COLLECTIVE.

FOR ADDITIONAL INFORMATION AND BUILDING SETBACK LINES SEE CUP 2001-00015 D.P.-256 ON FILE AT THE WICHITA-SEDGWICK COUNTY METROPOLITAN AREA PLANNING DEPARTMENT, WICHITA, KANSAS.

A DRAINAGE PLAN HAS BEEN APPROVED FOR THIS PLAT. ALL DRAINAGE EASEMENTS AND RIGHTS-OF-WAY SHALL REMAIN AT ESTABLISHED GRADES AND UNOBSTRUCTED TO ALLOW FOR THE CONVEYANCE OF STORM WATER, UNLESS MODIFIED WITH THE APPROVAL OF THE CITY ENGINEER.

MINIMUM PAD ELEVATIONS (LOWEST OPENING) SHALL BE AS FOLLOWS:

	CITY DATUM	NGVD
BLOCK 1		
LOT 2	186.1	1373.5
LOTS 3 & 4	182.0	1368.4
LOT 5	187.1	1374.5

OWNERS:

RALPH A. LANZRATH REVOCABLE TRUST

Ralph A. Lanzrath, Co-Trustee
RALPH A. LANZRATH, CO-TRUSTEE

Mary K. Lanzrath, Co-Trustee
MARY K. LANZRATH, CO-TRUSTEE

JELCO, L.L.C.

BY: _____
J.V. JOHNSTON, PRESIDENT

2045520

STATE OF KANSAS } SS
COUNTY OF SEDGWICK }

THIS INSTRUMENT WAS ACKNOWLEDGED BEFORE ME ON THIS 31st DAY OF October, 2001, BY RALPH A. LANZRATH AND MARY K. LANZRATH, CO-TRUSTEES OF THE RALPH A. LANZRATH REVOCABLE TRUST.

Gary L. Wiley
GARY L. WILEY — NOTARY PUBLIC

GARY L. WILEY
NOTARY PUBLIC
STATE OF KANSAS
My Appt. Exp. 4/12/05

MY APPOINTMENT EXPIRES: 4/12/05

STATE OF KANSAS } SS
COUNTY OF SEDGWICK }

THIS INSTRUMENT WAS ACKNOWLEDGED BEFORE ME ON THIS 31st DAY OF October, 2001, BY J.V. JOHNSTON, PRESIDENT OF JELCO, L.L.C.

Gary L. Wiley
NOTARY PUBLIC

MY APPOINTMENT EXPIRES: 4/12/05

GARY L. WILEY
NOTARY PUBLIC
STATE OF KANSAS
My Appt. Exp. 4/12/05

THIS PLAT OF THE COLLECTIVE HAS BEEN SUBMITTED TO AND APPROVED BY THE WICHITA-SEDGWICK COUNTY METROPOLITAN AREA PLANNING COMMISSION, WICHITA, KANSAS.

DATED THIS 6TH DAY OF SEPTEMBER, 2001.

WICHITA-SEDGWICK COUNTY METROPOLITAN AREA PLANNING COMMISSION

SEAL

JERRY MICHAELIS, ACTING CHAIRMAN

Marvin S. Krout
MARVIN S. KROUT, SECRETARY

REVIEWED IN ACCORDANCE WITH K.S.A. 58-2005 ON THIS 20th DAY OF November, 2001.

Tricia L. Robello
TRICIA L. ROBELLO, LS #1248
DEPUTY COUNTY SURVEYOR
SEDGWICK COUNTY KANSAS

THIS PLAT IS APPROVED AND ALL DEDICATIONS SHOWN HEREON, IF ANY, ARE ACCEPTED BY THE CITY COUNCIL OF THE CITY OF WICHITA, KANSAS, THIS 11th DAY OF December, 2001.

AT THE DIRECTION OF THE CITY COUNCIL

_____, CITY MANAGER
CHRIS CARRICHER

_____, CITY CLERK
PAT BURNETT

ENTERED ON TRANSFER RECORD THIS 9th DAY OF January, 2002

_____, COUNTY CLERK
DON BRACE

THIS IS TO CERTIFY THAT THIS INSTRUMENT WAS FILED FOR RECORD IN THE ℄ REGISTER OF DEEDS OFFICE AT 3:20 P.M. ON THE January 9 DAY OF January, 2002

Bill Meek by Linda Kizzire
BILL MEEK — REGISTER OF DEEDS

Linda Kizzire
LINDA KIZZIRE — DEPUTY

20.00 CC

T-346

PC 132-3