STORM WATER SEWER TO SERVE

Ridge Port Commercial Park

LOT 10, BLOCK A, Phase 1

Private Project Number: 1522 PPS (607861)

CITY OF WICHITA, KANSAS

Jim Armour, P.E. Acting City Engineer

March 2005

Bench Marks:

1. "□" Cut on SE Corner of Bridge, ½ Mile North of 29th Street North & Ridge Road.
   Elevation = 1431.85 City Datum (1331.25 NGVD)

2. City Disc- SW Corner of Ridge Road & 29th Street North. 80.8' S. 63.7' W. of Center Line Both.
   Elevation = 139.15 City Datum (1326.55 NGVD)

Index

Cover/Plan/Profile Sheet	1
Type 1 Curb Inlet Detail	2
BMP Erosion Detail Sheets	3-5
Copy Of Plat	6

Legal Description

Lot 10, Block A, Ridge Port Commercial Park, an Addition to Wichita, Sedgwick County, Kansas

Location Map

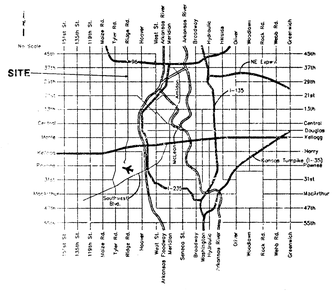

General Notes

1. Contractor will be required to provide notice to utility companies a minimum of forty-eight (48) hours prior to any excavation, as follows:

   Kansas One-Call 687-2470

   The Contractor must notify the following in case of an emergency:

Cox Communications	262-4270
Kansas Gas Service Company	1-888-482-4950
Westar Energy (Electric)	383-8650
Aquila Energy (Gas)	1-800-303-0357
Southwestern Bell Telephone Co.	1-800-286-8313
City of Wichita Water Dept. (Water)	262-6000
City of Wichita Sewer Maint. (SS)	262-6000
City of Wichita Storm Sewer Maint.	268-4090
City of Wichita Traffic Maint.	268-4034

2. All disturbed R/W areas not intended for pavement or sidewalk construction shall be seeded with Kansas Premium Fescue Blend at a rate of 8 lb./1000 Sq. Ft., fertilized with a 16-20-8 ratio at a rate of 4 lb./1000 Sq. Ft., and mulched with Prairie Hay at a rate of 92 lb./1000 Sq. Ft. Mulch shall be "patted" with forks or punched into soil to reduce loss due to wind.

3. Utility service lines, poles, valve boxes, meters, et cetera are to be adjusted as necessary by others prior to construction unless the plans specifically call for their adjustment by the Contractor or unless the plans specifically identify a utility to be adjusted by its owner during construction. Existing utilities and their location, as shown on the plans represent the best information obtainable for design and shall be field verified. The contractor will be required to work around existing utilities within the right-of-way which do not conflict with proposed construction.

4. All storm sewers and appurtenances shall be installed in accordance with the most recent edition of City of Wichita, Kansas Standard Specifications for the Construction of City Projects.

5. Contractor shall not start work on the project until the project inspector is assigned to the project and is present on the site. Contractor shall not start on the project until all necessary bonds and permits have been obtained. Bonds may include but are not limited to Statutory, Performance & Maintenance for areas in public right-of-way and easement. For projects within the City of Wichita contact Tom Mason (268-4574). Any work done without inspection will be required to be uncovered for inspection.

6. Rubble from the removal of miscellaneous structures and excess excavation which is to be wasted shall be disposed of on sites to be provided by the Contractor. These sites shall be approved by the Engineer as to suitability, appearance and site location. Locations that, in the opinion of the Engineer, will leave an unsightly appearance will not be approved. All disposal sites must be approved by the Kansas Department of Health and Environment. Material either stockpiled or disposed of in a flood plain would require a Kansas State Board of Agriculture permit. Any material dumped in waters of the United States or wetlands is subject to U.S. Corps. of Engineers permitting regulations. Any material buried or stockpiled beyond approved construction limits would require additional archaeological investigations unless buried in a previously approved borrow location.

APPROVED AS NOTED
BY CITY ENGINEER OF WICHITA

Storm ~~Sanitary~~ Sewers VRH 3/15/05

NOTE TO CONTRACTORS

Installation, inspection and testing for this project is to be provided by a Licensed Consulting Engineering Firm under contract with the Owner/Developer. Said Inspection to be in accordance with the City of Wichita standard construction engineering practices and certified by a Licensed Professional Engineer. No work shall be performed in dedicated easements or public right-of-way by the Contractor without such inspection nor shall any work be commenced without written authorization by the City Engineer. All Construction and Materials shall comply with the City of Wichita Specifications and Standards (on file and available in the City Engineer's Office).

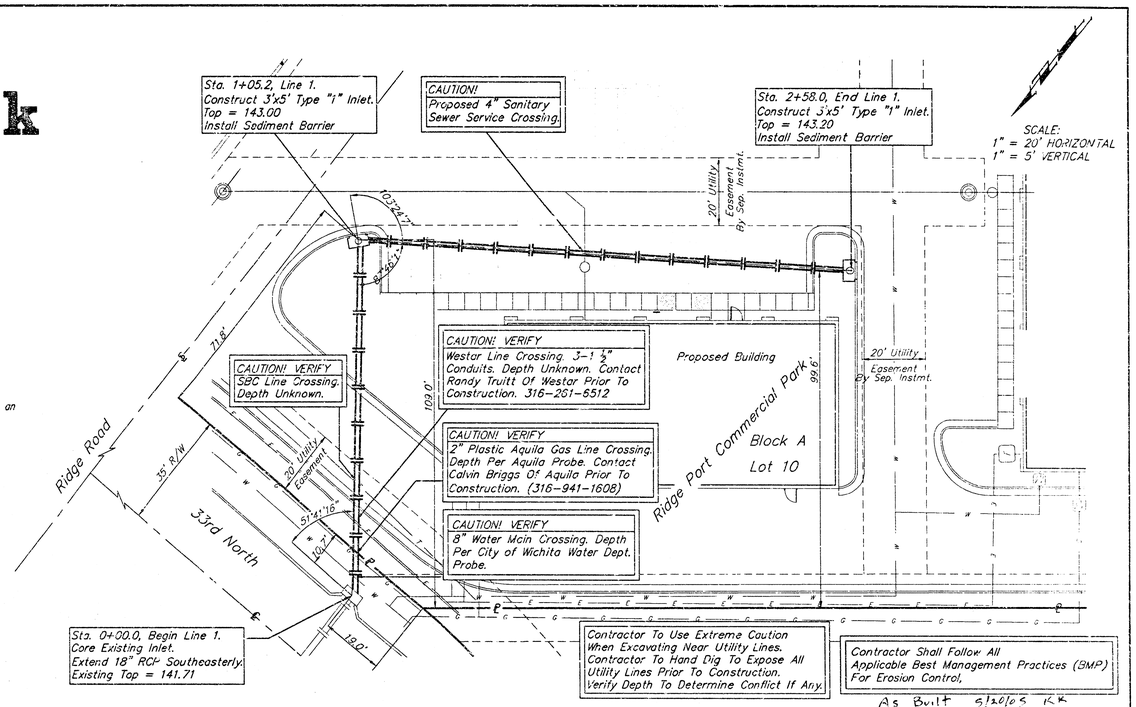

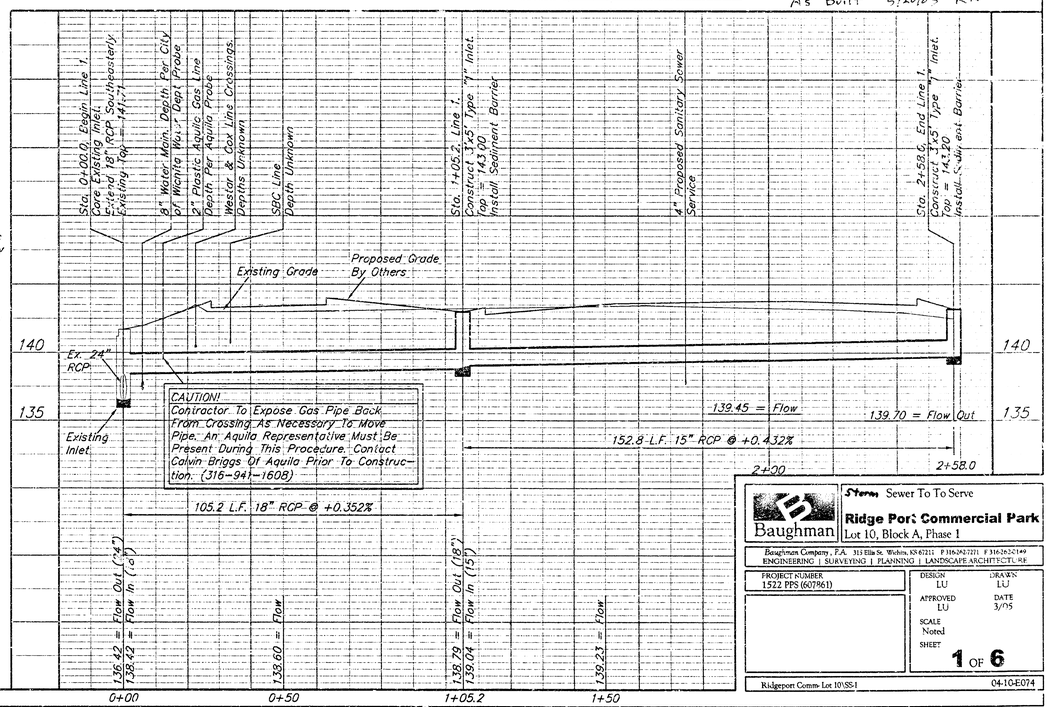

LEE M. LILLIE
LICENSED
17034
4-15-05
PROFESSIONAL ENGINEER
KANSAS

Baughman

Storm Sewer To To Serve

Ridge Port Commercial Park

Lot 10, Block A, Phase 1

Baughman Company, P.A. 313 Ellis St. Wichita, KS 67211 P 316.262.2221 F 316.262.2149
ENGINEERING | SURVEYING | PLANNING | LANDSCAPE ARCHITECTURE

PROJECT NUMBER 1522 PPS (607861)	DESIGN LU / DRAWN LU
	APPROVED LU / DATE 3/05
	SCALE Noted
	SHEET 1 OF 6

Ridgeport Comm-Lot 10\SS-1 04-10-E074

Ko 10 33 5

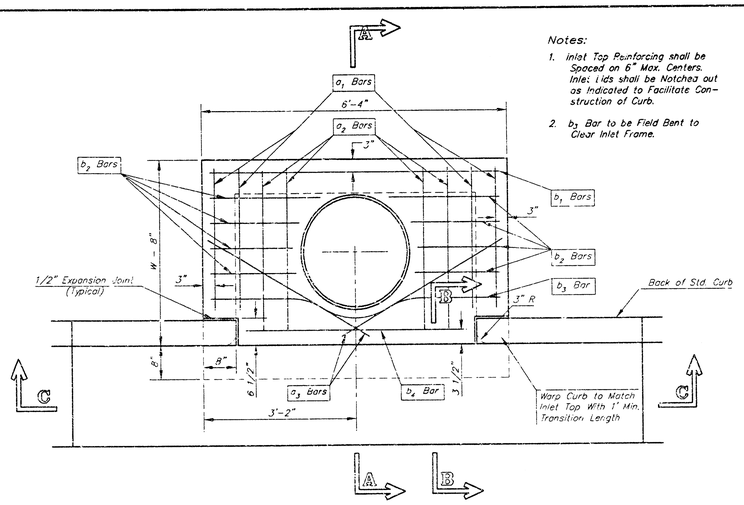

PLAN

Notes:

1. Inlet Top Reinforcing shall be Spaced on 6" Max. Centers. Inlet Lids shall be Notched out as Indicated to Facilitate Construction of Curb.
2. b_3 Bar to be Field Bent to Clear Inlet Frame.

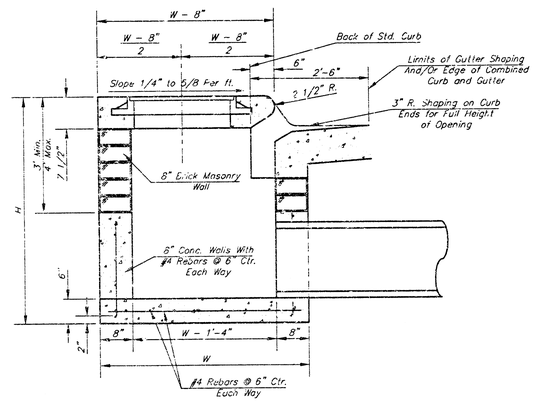

SECTION A-A

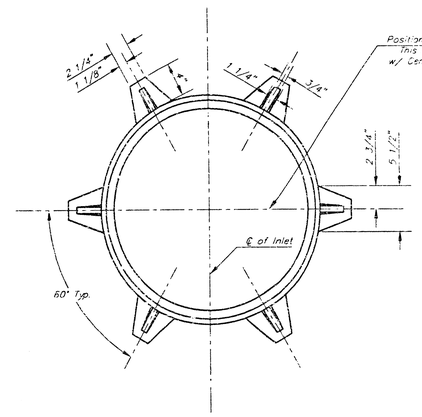

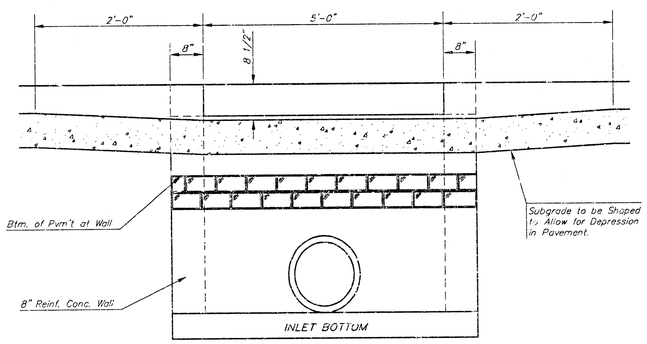

SECTION C-C

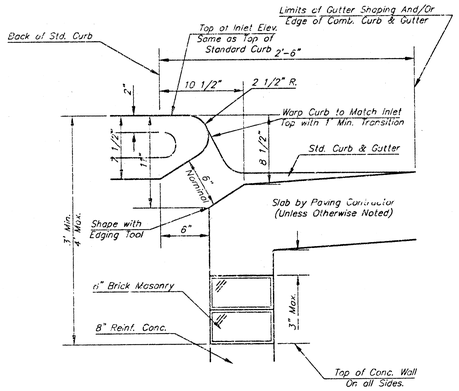

SECTION B-B

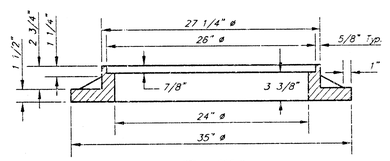

WT. = 325 lbs.

MANHOLE RING AND COVER

*See City of Wichita Standard Manhole Ring and Cover Detail Sheet for Cover Details to Be Used With Inlet Frame.

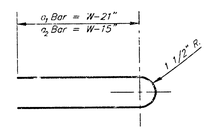

BENDING DIAGRAM

STEEL SCHEDULE

BAR		a_1	a_2	a_3	b_1 W=4'-4"	b_1 W=5'-4"	b_1 W=6'-4"	b_1 W=7'-4"	b_1 W=8'-4"	b_2	b_3	b_4	Wt. Lbs.
NUMBER		4	4	2	1	3	5	7	9	6	1	1	
SIZE		#4	#4	#4	#4	#4	#4	#4	#4	#4	#4	#6	
LENGTH	W=4'-4"	5'-7"	6'-7"	4'-0"	6'-1"	–	–	–	–	1'-9"	6'-2"	4'-6"	60±
	W=5'-4"	7'-7"	8'-7"	5'-0"	–	6'-1"	–	–	–	1'-9"	6'-2"	4'-8"	81±
	W=6'-4"	9'-7"	10'-7"	6'-0"	–	–	6'-1"	–	–	1'-9"	6'-2"	4'-8"	101±
	W=7'-4"	11'-7"	12'-7"	7'-0"	–	–	–	6'-1"	–	1'-9"	6'-2"	4'-8"	121±
	W=8'-4"	13'-7"	14'-7"	8'-0"	–	–	–	–	6'-1"	1'-9"	6'-2"	4'-8"	141±

Note: a_3 Bars to be Placed Approx. 2" Below Top of Inlet Cover.

STANDARD CURB INLET PRECAST TOPS			
W	PRE-CAST TOP SIZE	PIPE SIZE	CU. YD. CONC.
4'-4"	3'-8" 6'-4" 7 1/2	21" & SMALLER	0.38±
5'-4"	4'-8" 6'-4" 7 1/2"	24" & 30"	0.51±
6'-4"	5'-8" 6'-4" 7 1/2"	36" & 42"	0.64±
7'-4"	6'-8" 6'-4" 7 1/2"	48" & 54"	0.77±
8'-4"	7'-8" 6'-4" 7 1/2"	60" & 66"	0.90±

GENERAL NOTES

1. Concrete tops to be installed on thin mortar cushion to insure full support along brick walls. Concrete tops may be cast in place or precast. Concrete used for inlet construction shall be concrete pavement mix.
2. Contractor shall have the option of constructing 8" brick masonry walls between the concrete inlet base and top on this inlet when W=5'-4" and H=7'-0" or less.
3. Inlet invert shall be shaped with 8 sack sand mix concrete to create flow channels and to increase hydraulic efficiency such that the inlet will be self cleaning between all inlet and/or outlet pipes.
4. The ends of all pipes installed in inlets shall be cut off flush with the inside face of the inlet wall.

CITY OF WICHITA, KANSAS

TYPE 1 CURB INLET

INLET OPENING = 8'X5'-0"

BAUGHMAN COMPANY P.A.
ENGINEERING, SURVEYING, & PLANNING
316-262-7271 • 315 ELLIS • WICHITA, KANSAS 67211

PROJECT NUMBER 1522 PPS (807661)

SHEET 2 OF 6

DESIGN	DRAWN	APPROVED	DATE	SCALE
C.O.W.	STAFF		3/05	NONE

Wichita Comm-Ind 101 (Sht 1 of 6) 04-16-2014

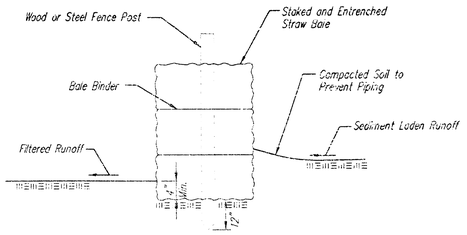

STRAW BALE BARRIERS

Material Specification:

Bale slope barriers may be constructed of wheat straw, oat straw, prairie hay, or bromegrass hay that is free of weeds declared noxious by the Kansas State Board of Agriculture.
The stakes used to anchor the bales should be a hardwood material with the following minimum dimensions: 2" square (nominal) by 4' long.

Placement:

A slope barrier should be used at the toe of a slope when a ditch does not exist. The slope barrier should be placed on nearly level ground 5' to 10' away from the toe of a slope. The barrier is placed away from the toe of the slope to provide adequate storage for settling out sediment.
When practicable, bale slope barriers should be placed along contours to avoid a concentration of flow.
Bale slope barriers can also be placed along right-of-way fence lines to keep sediment from crossing onto adjacent property. When placed in this manner, the slope barrier will not likely follow contours.

Proper installation method:

Excavate a trench the length of the planned slope barrier that is 4" deep and a bale's width wide. Make sure that the trench is excavated along a single contour. When practicable, slope barriers should be placed along contours to avoid a concentration of flow. Place the soil on the upslope side of the trench for later use.
Place the bales in the trench, making sure that they are butted tightly. Two stakes should be driven through each bale along the centerline of the ditch check, approximately 6" to 8" in from the bale ends. Stakes should be driven at least 12" into the ground.
Once all the bales have been installed and anchored, place the excavated soil against the upslope side of the check and compact it. The compacted soil should be no more than 3" to 4" deep.

List of common placement/installation mistakes to avoid:

When practicable, do not place bale slope barriers across contours. Slope barriers should be placed along contours to avoid a concentration of flow. Concentrated flow over a slope barrier creates a scour hole on the downslope side of the barrier. The scour hole eventually undermines the bales and the barrier fails.
Do not place bale slope barriers in areas with shallow soils underlain by rock. If the barrier is not anchored sufficiently, it will wash out.
Bale slope barriers must be dug into the ground. Bales at ground level do not work because they allow water to flow under the barrier.

Inspection and Maintenance:

Bale slope barriers should be inspected every 7 days and within 24 hours of a rainfall of 1/2" or more. The following is a list of questions that should be addressed during each inspection:

Are there any points along the slope barrier where water is concentrating?
Does water flow under the slope barrier?
Does water flow through spaces between abutting bales?
Are any bales dislodged?
Are bales decomposing due to age and/or water damage?
Does sediment need to be removed from behind the slope barrier?

NOTE: Point A must be higher than Point B so that water flows over the bales and not around them.

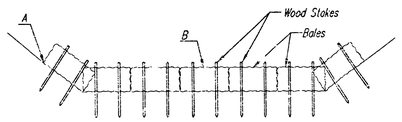

STRAW BALE DITCH CHECKS

Material Specification:

Bale ditch checks may be constructed of wheat straw, oat straw, prairie hay, or bromegrass hay that is free of weeds declared noxious by the Kansas State Board of Agriculture.
The stakes used to anchor the bales should be a hardwood material with the following minimum dimensions: 2" square (nominal) by 4' long.
Optional: The downstream scour apron should be constructed of a double-netted straw erosion-control blanket at least 6' wide.
Optional: The metal landscape staples used to anchor the erosion-control blanket should be at least 8" long.

Placement:

Bale ditch checks should be placed perpendicular to the flowline of the ditch.
The ditch check should extend far enough so that the ground level at the ends of the check is higher than the top of the lowest center bale. This prevents water from flowing around the check.
Checks should not be placed in ditches where high flows are expected. Rock checks should be used instead.
Bales should be placed in ditches with slopes of 6% or less. For slopes steeper than 6%, rock checks should be used.
The following table provides check spacing for a given ditch grade:

Ditch grade (%)	Check Spacing (feet)
0.5	200
1.0	200
2.0	100
3.0	65
4.0	50
5.0	40
6.0	30

Proper installation method:

Excavate a trench perpendicular to the ditch flowline that is 4" deep and a bale's width wide. Extend the trench in a straight line along the entire length of the proposed ditch check. Place the soil on the upstream side of the trench-it will be used later.
Optional: On the downstream side of the trench, roll out a length of erosion-control blanket (scour apron) equal to the length of the trench. Place the upstream edge of the erosion-control blanket along the bottom upstream edge of the trench. The erosion control blanket should be anchored in the trench with one row of 8" landscape staples placed on 18" centers. The remainder of the erosion-control blanket (the portion that is not lying in the trench) will serve as the downstream scour apron. This section of the blanket should be anchored to the ground with 8" landscape staples placed around the perimeter of the blanket on 18" centers. The remainder of the blanket should be anchored using two evenly spaced rows of 8" landscape staples on 18" centers placed perpendicular to the flowline of the ditch.
Place the bales in the trench, making sure that they are butted tightly. Two stakes should be driven through each bale along the centerline of the ditch check, approximately 6" to 8" in from the bale ends. Stakes should be driven at least 12" into the ground.
Once all the bales have been installed and anchored, place the excavated soil against the upstream side of the check and compact it. The compacted soil should be no more than 3" to 4" deep and extend upstream no more than 24".

List of common placement/installation mistakes to avoid:

Do not place a bale ditch check directly in front of a culvert outlet. It will not stand up to the concentrated flow.
Do not place bale ditch checks in ditches that will likely experience high flows. They will not stand up to concentrated flow.
Follow prescribed ditch-check spacing guidelines. If spacing guidelines are exceeded, erosion will occur between the ditch checks.
Do not allow water to flow around the ditch check. Make sure that this ditch check is long enough so that the ground level at the ends of the check is higher than the top of the lowest center bale.
Do not place bale ditch checks in channels with shallow soils underlain by rock. If the check is not anchored sufficiently, it will wash out.
Bale ditch checks must be dug into the ground. Bales at ground level do not work because they allow water to flow under the check.

Inspection and Maintenance:

Bale ditch checks should be inspected every 7 days and within 24 hours of a rainfall of 1/2" or more. The following is a list of questions that should be addressed during each inspection:

Does water flow around the ditch check?
Does water flow under the ditch check?
Does water flow through spaces between abutting bales?
Are any bales and/or scour aprons (optional) dislodged?
Are bales decomposing due to age and/or water damage?
Does sediment need to be removed from behind the ditch check?

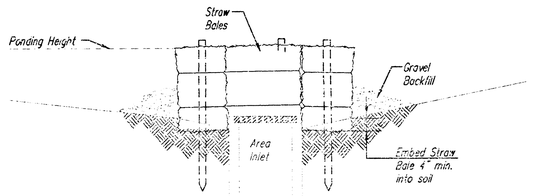

SECTION A-A

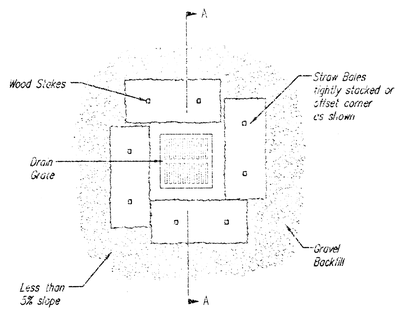

SIRAW BALE BARRIERS FOR AREA INLETS
(INLET PROTECTION)

Material Specification:

Bale area inlet barriers should be constructed of wheat straw, oat straw, prairie hay, or bromegrass hay that is free of weeds declared noxious by the Kansas State Board of Agriculture.
The stakes used to anchor the bales should be a hardwood material with the following minimum dimensions: 2" square (nominal) by 4' long.

Placement:

Bale area inlet barriers should be placed directly around the perimeter of a drop inlet. When a bale area inlet barrier is located near an inlet that has steep approach slopes, the storage capacity behind the barrier is drastically reduced. Timely removal of sediment must occur for a barrier to operate properly in this location.

Proper Installation Method:

Excavate a trench around the perimeter of the area inlet that is at least 4" deep by a bale's width wide.
Place the bales in the trench, making sure that they are butted tightly. Some bales may need to be shortened to fit into the trench around the area inlet. Two stakes should be driven through each bale, approximately 6" to 8" in from the bale ends.
Stakes should be driven at least 12" into the ground.
Once all the bales have been installed and anchored, place the excavated soil against the receiving side of the barrier and compact it. The compacted soil should be no more than 3" to 4" deep.
Note: When a bale area inlet barrier is placed in a shallow median ditch, make sure that the top of the barrier is not higher than the paved road. In this configuration, water may spread onto the roadway causing a hazardous condition.

List of common placement installation mistakes to avoid:

Bales should be placed directly against the perimeter of the area inlet. This allows overtopping water to flow directly into the inlet instead of onto nearby soil causing scour.
Bale area inlet barriers must be dug into the ground. Bales at ground level do not work because they allow water to flow under the barrier.

Inspection and Maintenance:

Bale area inlet barriers should be inspected every 7 days and within 24 hours of a rainfall 1/2" or more. The following is a list of questions that should be addressed during each inspection:

Does water flow under the area inlet barrier?
Does water flow through spaces between abutting bales?
Are any bales dislodged?
Are bales decomposing due to age and/or water damage?
Does sediment need to be removed from behind the area inlet barrier?

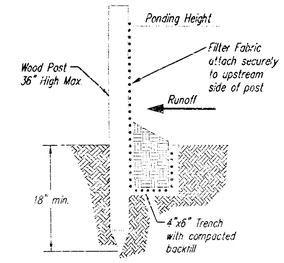

SILT FENCE BARRIERS

SILT FENCE BARRIERS

Material Specification:

Silt fence fabric should conform to the AASHTO M288 96 silt fence specification.
The posts used to support the silt fence fabric should be a hardwood material with the following minimum dimensions: 2" square (nominal) by 4' long.
Silt fence fabric should be attached to the wooden posts with staples, wire, zip ties, or nails.

Placement:

A slope barrier should be used at the toe of a slope when a ditch does not exist. The slope barrier should be placed on nearly level ground 5' to 10' away from the toe of a slope. The barrier is placed away from the toe of the slope to provide adequate storage for settling out sediment.
When practicable, silt fence slope barriers should be placed along contours to avoid a concentration of flow.
Silt fence slope barriers can also be placed along right-of-way fence lines to keep sediment from crossing onto adjacent property. When placed in this manner, the slope barrier will not likely follow contours.

Proper installation method:

Excavate a trench the length of the planned slope barrier that is 6" deep by 4" wide.
Make sure that the trench is excavated along a single contour. When practicable, slope barriers should be placed along contours to avoid a concentration of flow. Place the soil on the upslope side of the trench for later use.
Roll out a continuous length of silt fence fabric on the downslope side of the trench.
Place the edge of the fabric in the trench starting at the top upslope edge. Line all three sides of the trench with the fabric. Backfill over the fabric in the trench with the excavated soil and compact. After filling the trench, approximately 24" to 36" of silt-fence fabric should remain exposed.
Lay the exposed silt fence upslope of the trench to clear an area for driving in the posts.
Just downslope of the trench, drive posts into the ground to a depth of at least 18".
Place posts no more than 4' apart.
Attach the silt fence to the anchored post with staples, wire, zip ties, or nails.

List of common placement/installation mistakes to avoid:

When practicable, do not place silt fence slope barriers across contours. Slope barriers should be placed along contours to avoid a concentration of flow. When the flow concentrates, it overtops the barrier and the silt fence slope barrier quickly deteriorates.
Do not place silt-fence posts on the upslope side of the silt fence fabric. In this configuration, the force of the water is not restricted by the posts, but only by the staples (wire, zip ties, nails, etc.). The silt fence will rip and fail.
Do not place silt fence slope barriers in areas with shallow soils underlain by rock. If the barrier is not sufficiently anchored, it will wash out.
Silt fence slope barriers must be dug into the ground-silt fence at ground level does not work because water will flow underneath.

Inspection and Maintenance:

Silt fence slope barriers should be inspected every 7 days and within 24 hours of a rainfall of 1/2" or more. The following is a list of questions that should be addressed during each inspection:

Are there any points along the slope barrier where water is concentrating?
Does water flow under the slope barrier?
Do the silt fences sag excessively?
Has the silt fence torn or become detached from the posts?
Does sediment need to be removed from behind the slope barrier?

Baughman

Erosion Control Details

Baughman Company, P.A. 315 E. 8th St. Wichita, KS 67211 P 316.262.2221 F 316.262.2149
ENGINEERING | SURVEYING | PLANNING | LANDSCAPE ARCHITECTURE

PROJECT NUMBER	DESIGN	DRAWN
1522 PPS (607861)	Staff	Staff
REVISIONS:	APPROVED	DATE 3/05
	SCALE None	
	SHEET 3 OF 6	

Ridgeport Comm Lot 10\SEBMP_Baughman_DTLSLR14 04-10-[illegible]

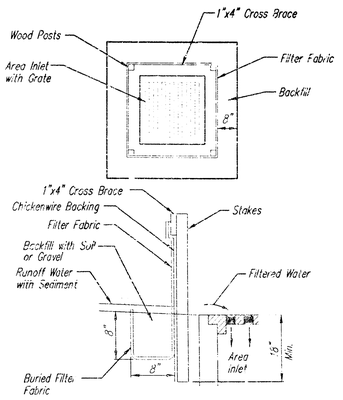

SILT FENCE BARRIERS FOR AREA INLETS
(INLET PROTECTION)

Material Specification:

Silt fence fabric should conform to the AASHTO M288 96 silt fence specification.
The wire or polymeric mesh backing used to help support the silt fence fabric should conform to the AASHTO M288 96 silt fence specification.
The posts used to support the silt fence fabric should be a hardwood material with the following minimum dimensions: 2" square (nominal) by 4' long.
The material used to frame the tops of the posts should be 1" by 4" boards.
Silt fence fabric and support backing should be attached to the wooden posts and frame with staples, wire, zip ties, or nails.

Placement:

Place a silt fence drop inlet barrier in a location where it is unlikely to be overtopped.
Water should flow through silt fence, not over it. Silt fence barriers for area inlets often fail when repeatedly overtopped.
When used as a barrierfor area inlets, silt fence fabric and posts must be supported at the top by a wooden frame.
When a silt fence barrier for area inlets is located near an inlet that has steep approach slopes, the storage capacity behind the barrier is drastically reduced. Timely removal of sediment must occur for a barrier to operate properly in this location.

Proper installation method:

Excavate a trench around the perimeter of the area inlet that is at least 8" deep by 8" wide.
Drive posts to a depth of at least 18" around the perimeter of the area inlet.
The distance between posts should be 4' or less. If the distance between two adjacent corner posts is more than 4', add another post(s) between them.
Connect the tops of all the posts with a wooden frame made of 1" by 4" boards. Use nails or screws for fastening.
Attach the wire or polymeric-mesh backing to the outside of the post/frame structure with staples, wire, zip ties, or nails.
Roll out a continuous length of silt fence fabric long enough to wrap around the perimeter of the area inlet. Add more length for overlapping the fabric joint. Place the edge of the fabric in the trench, starting at the outside edge of the trench. Line all three sides of the trench with the fabric. Backfill over the fabric in the trench with the excavated soil and compact. After filling the trench, approximately 24" to 36" of silt fence fabric should remain exposed.
Attach the silt fence to the outside of the post/frame structure with staples, wire, zip ties, or nails. The joint should be overlapped to the next post.

Note: When a silt fence barrier for area inlet is placed in a shallow median ditch, make sure that the top of the barrier is not higher than the paved road. In this configuration, water may spread onto the roadway causing a hazardous condition.

List of common placement/installation mistakes to avoid:

Water should flow through a silt fence barrier for area inlet-not over it. Place a silt fence barrier for area inlet in a location where it is unlikely to be overtopped. Silt fence barrier for area inlets often fail when repeatedly overtopped.
Do not place posts on the outside of the silt fence barrier for area inlet. In this configuration, the force of the water is not resisted by the posts, but only by the staples (wire, zip-ties, nails, etc.). The silt fence will rip and fail.
Do not install silt fence barrier for area inlets without framing the top of the posts.
The corner posts around area inlets are stressed in two directions whereas a normal silt fence is only stressed in one direction. This added stress requires more support.

Inspection and Maintenance:

Silt fence barrier for area inlets should be inspected every 7 days and within 24 hours of a rainfall of 1/2" or more. The following is a list of questions that should be addressed during each inspection:

Does water flow under the silt fence?
Does the silt fence sag excessively?
Has the silt fence torn or become detached from the posts?
Does sediment need to be removed from behind the area inlet barrier?

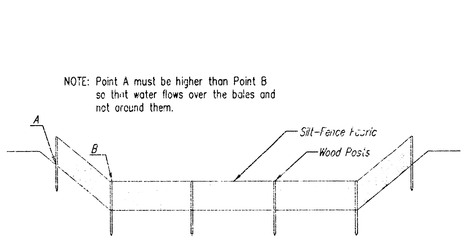

SILT FENCE DITCH CHECKS
(STREAM PROTECTION)

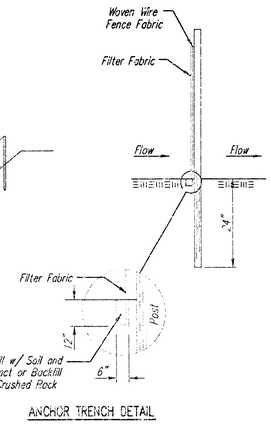

ANCHOR TRENCH DETAIL

Material Specification:

Silt fence fabric should conform to the AASHTO M288 96 silt fence specification.
The posts used to support the silt fence fabric should be a hardwood material with the following minimum dimensions: 2" square (nominal) by 4' long.
Silt fence fabric should be attached to the wooden posts with staples, wire, zip ties, or nails.

Placement:

Place silt fence in ditches where it is unlikely that it will be overtopped.
Water should flow through a silt fence ditch check, not over it. Silt fence ditch checks often fail when overtopped.
Silt fence ditch checks should be placed perpendicular to the flowline of the ditch.
The silt fence should extend far enough so that the ground level at the ends of the fence is higher than the top of the low point of the fence. This prevents water from flowing around the check.
Checks should not be placed in ditches where high flows are expected. Rock checks should be used instead.
Silt fence should be placed in ditches with slopes of 6% or less. For slopes steeper than 6%, rock checks should be used.

The following table provides check spacing for a given ditch grade:

Ditch Check Ditch Grade (%)	Spacing Check Spacing (feet)
0.5	200
1.0	200
2.0	100
3.0	65
4.0	50
5.0	40
6.0	30

Proper installation method:

Excavate a trench perpendicular to the ditch flowline that is at least 12" deep by 6" wide.
Extend the trench in a straight line along the entire length of the proposed ditch check.
Place the soil on the upstream side of the trench for later use.
Roll out a continuous length of silt fence fabric on the downstream side of the trench.
Place the edge of the fabric in the trench starting at the top upstream edge of the trench. Line two sides of the trench with the fabric as shown on detail. Backfill over the fabric in the trench with the excavated soil and compact. After filling the trench, approximately 24" to 36" of silt fence fabric should remain exposed.
Lay the exposed silt fence on the upstream side of the trench to clear an area for driving in the posts. Just downstream of the trench, drive posts into the ground to a depth of at least 24". Place posts no more than 4' apart.
Attach the silt fence to the anchored post with staples, wire, zip ties, or nails.

List of common placement/installation mistakes to avoid:

Water should flow through a silt fence ditch check-not over it. Place silt fence in ditches where it is unlikely that it will be overtopped. Silt fence installations quickly deteriorate when water overtops them.
Do not place silt fence posts on the upstream side of the silt fence fabric. In this configuration, the force of the water is not restricted by the posts, but only by the staples (wire, zip ties, nails, etc.). The silt fence will rip and fail.
Do not place a silt fence ditch check directly in front of a culvert outlet. It will not stand up to the concentrated flow.
Do not place silt fence ditch checks in ditches that will likely experience high flows. They will not stand up to concentrated flow.
Follow prescribed ditch check spacing guidelines. If spacing guidelines are exceeded, erosion will occur between the ditch checks.
Do not allow water to flow around the ditch check. Make sure that the ditch check is long enough so that the ground level at the ends of the fence is higher than the low point on the top of the fence.
Do not place silt fence ditch checks in channels with shallow soils underlain by rock. If the check is not anchored sufficiently, it will wash out.

Inspection and Maintenance:

Silt fence ditch checks should be inspected every 7 days and within 24 hours of a rainfall of 1/2" or more. The following is a list of questions that should be addressed during each inspection:

Does water flow around the ditch check?
Does water flow under the ditch check?
Does the silt fence sag excessively?
Has the silt fence torn or become detached from the posts?
Does sediment need to be removed from behind the ditch check?

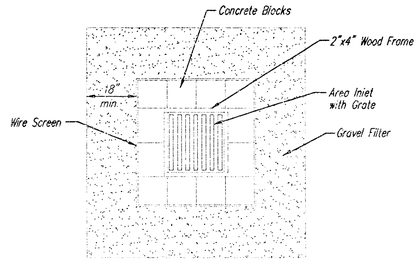

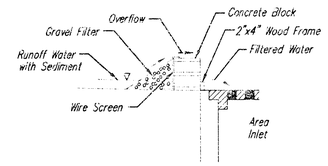

CONCRETE BLOCK FILTER FOR AREA DRAIN
(INLET PROTECTION)

Gravel barriers provide little filtering of large inflow waters. However, when installed correctly and maintained, they can effectively treat low runoff flows.

Placement of gravel filters around area drains must be completed in a manner that will not cause local flooding.

Gravel filters can be used if the immediate and adjacent area to the area drain consists of soil or pavement.

Only gravel filters are to be installed on top of the pavement.

Instructions for installing:

STEP 1: Place concrete blocks around the grate. The blocks can be stacked one or two high and should be supported by a 2"x4" board.
STEP 2: Wrap 1/2" mesh wire screen around the concrete blocks.
STEP 3: Place 1" to 1-1/2" diameter rock around the blocks and wire screen. Be sure the rock extends down from the top of the concrete block.
STEP 4: To prevent damage to vehicles, signs warning drivers about the structures may be necessary.

An alternative method is use of gravel bags that are supported to prevent collapsing.

Use of rock having diameters smaller than 1" may result in clogging of pores and reduce the amount of water flowing into an inlet.

Maintenance:

All gravel filters installed around area drains should be inspected and repaired after each runoff event. Sediment should be removed when material is within 3" of the top of any block. Periodically, the gravel should be raked to increase infiltration and filtering of runoff waters. Accumulated sediment is to be removed immediately from roads and streets after every runoff event.

Baughman

Erosion Control Details

Baughman Company, P.A. 315 Elk St. Wichita, KS 67211 P 316.267.2231 F 316.267.1349
ENGINEERING | SURVEYING | PLANNING | LANDSCAPE ARCHITECTURE

PROJECT NUMBER 1522 PTS (607861)	DESIGN Staff / DRAWN Staff
REVISIONS:	APPROVED / DATE 3/05
	SCALE None
	SHEET 4 OF 6

Ridgeport Comm-Lot 10\SEBMP_Baughman_DTLS2.R14 04-10-5074

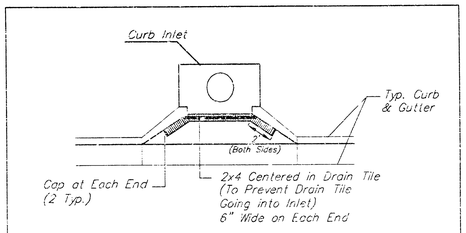

Note:
Place 4" perforated PVC pipe filled w/ 1/2"-1" Dia. gravel. Place pipe in front of Curb Inlet as Shown.

2x4 LENGTH	INLET TYPE	INLET OPENING
5'-6"	1-A	5'-0"
10'-6"	1-A	10'-0"
15'-6"	1-A	15'-0"

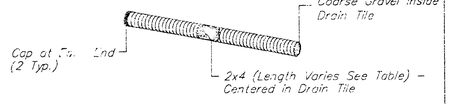

CURB INLET PROTECTION

4" Perforated Pipe w/ Gravel

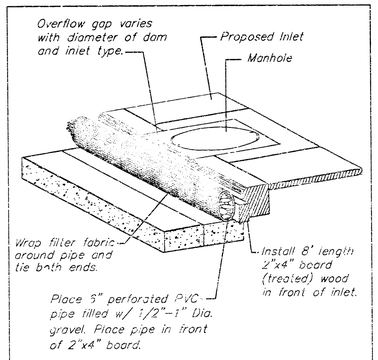

INLET PROTECTION

Perforated Pipe w/ Gravel

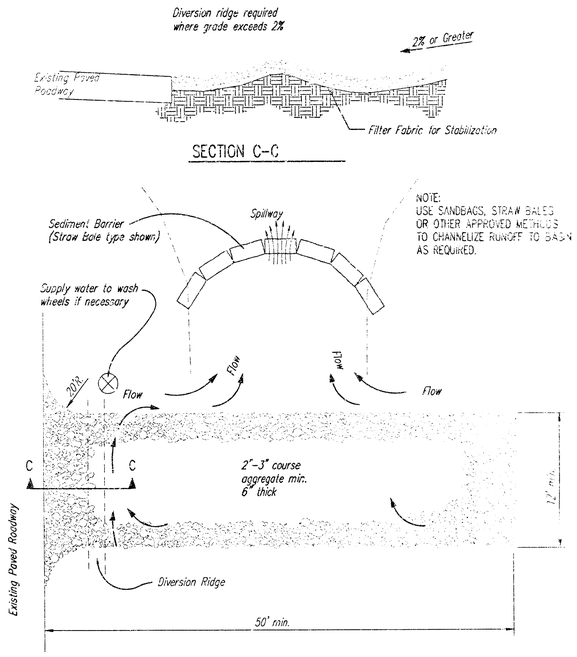

STABILIZED CONSTRUCTION ENTRANCE

NOTES:

1. THE ENTRANCE SHALL BE MAINTAINED IN A CONDITION THAT WILL PREVENT TRACKING OR FLOWING OF SEDIMENT ONTO PUBLIC RIGHTS-OF-WAY. THIS MAY REQUIRE TOP DRESSING, REPAIR AND/OR CLEANOUT OF ANY MEASURES USED TO TRAP SEDIMENT.
2. WHEN NECESSARY, WHEELS SHALL BE CLEANED PRIOR TO ENTRANCE ONTO PUBLIC RIGHT-OF-WAY.
3. WHEN WASHING IS REQUIRED, IT SHALL BE DONE ON AN AREA STABILIZED WITH CRUSHED STONE THAT DRAINS INTO AN APPROVED SEDIMENT TRAP OR SEDIMENT BASIN, AS SHOWN ABOVE.
4. DRIVE ENTRANCES ONTO RESIDENTIAL LOTS WILL NOT BE REQUIRED TO HAVE THE SEDIMENT BARRIER SHOWN, BUT WHEEL WASHING MAY BE REQUIRED IF STABILIZED ENTRANCE IS NOT SUFFICIENT TO KEEP MUD FROM BEING TRACKED ONTO ADJACENT STREET. ENTRANCE SHALL EXTEND FROM BACK OF CURB TO DWELLING.

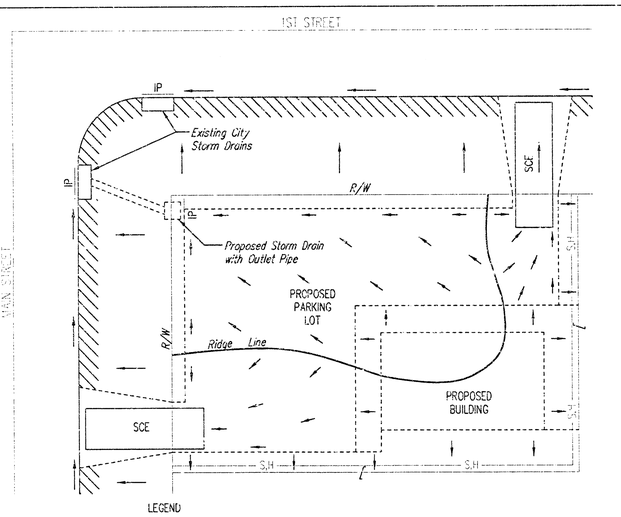

LEGEND

- Flow Direction
- IP — Inlet Protection – to be provided at all inlets subject to silt laden runoff.
- S.H — Silt Fence or Hay Bale Barrier – to be installed along property lines where runoff from construction site can run onto other properties.
- SCE — Stabilized Construction Entrance – to be used at all locations where vehicles or equipment enter or exit property.
- Back of Curb Protection – to be installed whenever curb is backfilled to less than 3 inches from top and disturbed earth exists adjacent thereto. (See City Standard Details.)

General Notes

1. This standard detail sheet is a part of your building permit. The BMP's shown on this sheet are considered minimum standards. Whenever sediment enters the streets, storm sewers, ditches, or ponds, contractor will install additional BMP's, as needed, to correct the problem.
2. Follow these general principals on all commercial building sides.
3. The soil erosion BMP's shown hereon must be in place at all times during construction until such time as the site is re-established with paving or grass.
4. Failure to install, protect, and maintain BMP's are violations of Section 16.32 of the City Code and will subject the contractor to the penalties provided therein. Included with your permit is an orange "notice" sign that must be posted on-site in a conspicious place at all times during construction. This sign is provided to assist you in the maintenance of BMP'S.
5. Back of Curb Protection: Can include hay bale, silt fence, or Curlex barrier, as shown on City BMP standard details. This BMP must remain in place until the area between the curb and right-of-way line has been permanently stabilized.
6. The General Contractor is responsible for the installation and maintenance of all BMP's.
7. Should the site abut a lake, BMP's will be installed to prevent sediment from entering the lake.
8. Any mud inadvertently tracked onto any street will be cleaned up by the general contractor at the end of each day's work.

Baughman

Erosion Control Details

Baughman Company, P.A. 315 Ella St. Wichita, KS 67211 P 316.262.7271 F 316.262.0149
ENGINEERING | SURVEYING | PLANNING | LANDSCAPE ARCHITECTURE

PROJECT NUMBER: 1522 PPS (607861)	DESIGN: Staff / DRAWN: Staff
REVISIONS:	APPROVED / DATE: 3/05
	SCAL.: None
	SHEET: 5 OF 6

Ridgeport Comm-Lot 10\SEBMP_Baughman_DTLS-R14 04-10-E074

RIDGE PORT COMMERCIAL PARK
WICHITA, SEDGWICK COUNTY, KANSAS

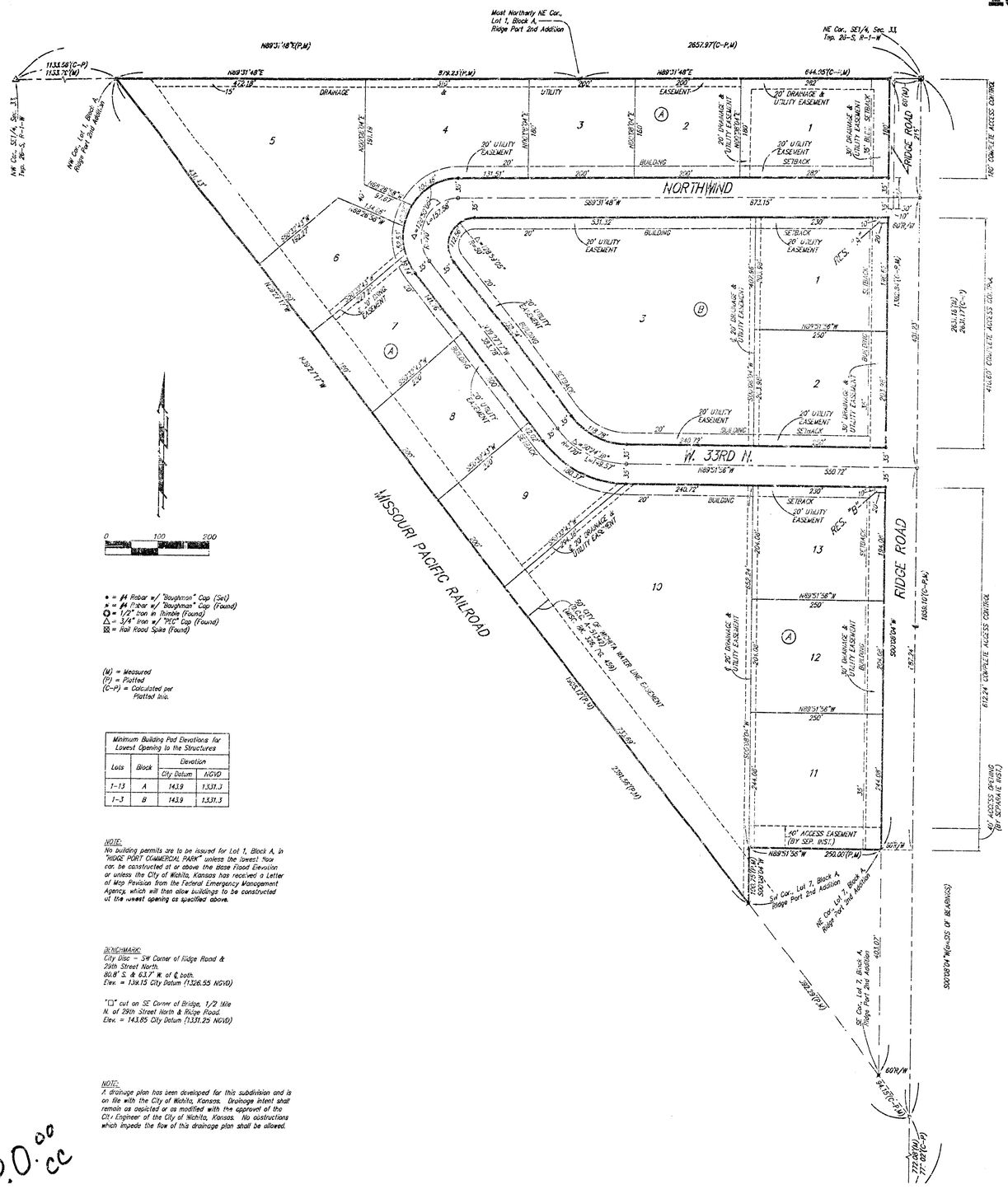

• = ½ Rebar w/ "Baughman" Cap (Set)
• = ½ Rebar w/ "Baughman" Cap (Found)
O = 1/2" Iron in Thimble (Found)
△ = 3/4" Iron w/ "PEC" Cap (Found)
⊠ = Rail Road Spike (Found)

(M) = Measured
(P) = Platted
(C-P) = Calculated per Platted Info.

Minimum Building Pad Elevations for Lowest Opening to the Structures			
Lots	Block	Elevation	
		City Datum	NGVD
1-13	A	143.9	1331.3
1-3	B	143.9	1331.3

NOTE:
No building permits are to be issued for Lot 1, Block A, in "RIDGE PORT COMMERCIAL PARK" unless the lowest floor can be constructed at or above the base Flood Elevation or unless the City of Wichita, Kansas has received a Letter of Map Revision from the Federal Emergency Management Agency, which will then allow buildings to be constructed at the lowest opening as specified above.

BENCHMARK:
City Disc - SW Corner of Ridge Road & 29th Street North.
80.8' S. & 63.7' W. of ℄ both.
Elev. = 1316.15 City Datum (1326.95 NGVD)

"□" cut on SE Corner of Bridge, 1/2 Mile N. of 29th Street North & Ridge Road.
Elev. = 1143.85 City Datum (1331.25 NGVD)

NOTE:
A drainage plan has been developed for this subdivision and is on file with the City of Wichita, Kansas. Drainage intent shall remain as depicted or as modified with the approval of the City Engineer of the City of Wichita, Kansas. No obstructions which impede the flow of this drainage plan shall be allowed.

State of Kansas) SS
Sedgwick County) We, Baughman Company, P.A., Surveyors in aforesaid county and state do hereby certify that we have surveyed and platted "RIDGE PORT COMMERCIAL PARK", Wichita, Sedgwick County, Kansas, and that the accompanying plat is a true and correct exhibit of the property surveyed, described as and being a replat of Lots 1, 2, 3, 4, 5, and 6, inclusive, Block A, Ridge Port 2nd Addition, Wichita, Sedgwick County, Kansas, TOGETHER with that part of the SE1/4 of Sec. 33, Twp. 26-S, R-1-W of the 5th P.M., Sedgwick County, Kansas lying northerly and northeasterly of Ridge Port 2nd Addition, Wichita, Sedgwick County, Kansas.

Existing public easements and dedications being vacated by virtue of K.S.A. 12-512(b).

Baughman Company, P.A.

Michael G. Conrey 12-31-2002, Surveyor
Michael G. Conrey

Know all men by these presents that we, the undersigned, have caused the land in the surveyors certificate to be platted into Lots, Blocks, Streets, and Reserves to be known as "RIDGE PORT COMMERCIAL PARK", Wichita, Sedgwick County, Kansas. The utility easements are hereby granted as indicated for the construction and maintenance of all public utilities. The drainage easement is hereby granted as indicated for drainage purposes. The drainage and utility easements are hereby granted as indicated for drainage purposes and for the construction and maintenance of all public utilities. The streets are hereby dedicated to and for the use of the public. Reserves "A" and "B" are hereby reserved for signs, open space, streets, landscaping, drainage purposes, and utilities. Reserves "A" and "B" shall be owned and maintained by the lot owners association for the addition. Access controls shall be as depicted on the face of the plat and are hereby granted to the city of Wichita, Kansas. The permitted opening locations shall be as determined by the City Engineer of the City of Wichita, Kansas. The Minimum Building Pad Elevation for the lowest opening to the structures on all Lots shall be 143.9 City Datum, (1331.3 NGVD).

RRGNL, L.L.C.

Jay W. Russell, Member

State of Kansas) SS
Sedgwick County) The foregoing instrument acknowledged before me, this 30TH day of APRIL, 2002, by Jay W. Russell, Member of RRGNL, L.L.C., on behalf of the limited liability company.

JUDITH M. TERHUNE
Notary Public - State of Kansas
My Appt. Expires 11-7-2005

Judith M. Terhune, Notary Public
JUDITH M. TERHUNE

My App't. Exp. 11-7-2005

We the undersigned holders of a mortgage on the above described property, do hereby consent to this plat of "RIDGE PORT COMMERCIAL PARK", Wichita, Sedgwick County, Kansas.

Conway Bank f/k/a The First National Bank

Chris A. Anderson EXEC V.P. (Title)
CHRIS A. ANDERSON

State of Kansas) SS
Sedgwick County) The foregoing instrument acknowledged before me, this 6TH day of MAY, 2002, by CHRIS A. ANDERSON, EXEC. V. P. (Title) of Conway Bank f/k/a The First National Bank, on behalf of the bank.

JUDITH M. TERHUNE
Notary Public - State of Kansas
My Appt. Expires 11-7-2005

Judith M. Terhune, Notary Public
JUDITH M. TERHUNE

This plat of "RIDGE PORT COMMERCIAL PARK", Wichita, Sedgwick County, Kansas has been submitted to and approved by the Wichita-Sedgwick County Metropolitan Area Planning Commission, Wichita, Kansas.

Dated this 21st day of February, 2002.
Wichita-Sedgwick County Metropolitan Area Planning Commission

J.D. Michaelis, Chair

SEAL

Marvin S. Krout, Secretary

This plat approved and all dedications shown hereon accepted by the City Council of the City of Wichita, Kansas, this 18th day of June, 2002.

At the direction of the City Council

Chris Cherches, City Manager

Kathy Rupersburg A.P. City Clerk
per Pat Burnett

Reviewed in accordance with K.S.A. 58-2005 on this 20th day of May, 2002.

Tricia L. Robello, L.S. #1248
Deputy County Surveyor
Sedgwick County, Kansas

Entered on transfer record this 20th day of June, 2002.

Don Brace, County Clerk
Don Brace

State of Kansas) SS
Sedgwick County) This is to certify that this plat has been filed for record in the office of the Register of Deeds, this 21st day of June, 2002 at 9:25 o'clock A.M; and is duly recorded.

#20097278

Bill Meek, Register of Deeds
Bill Meek by Linda Kizzire

Linda Kizzire, Deputy

RIDGE PORT COMMERCIAL PARK
AUDITOR'S