STORM SEWER PLANS
TO SERVE THE
LOT 1, BLOCK 1
SOONER ADDITION

PRIVATE PROJECT NO. 1534PPS (607861)
CITY OF WICHITA
SEDGWICK COUNTY, KANSAS

APPROVED AS NOTED
BY CITY ENGINEER OF WICHITA

STORM SEWERS VRH 4/8/05

NOTE TO CONTRACTOR

INSPECTION AND TESTING FOR THIS PROJECT IS TO BE PROVIDED BY A LICENSED CONSULTING ENGINEERING FIRM UNDER CONTRACT WITH THE OWNER / DEVELOPER. SAID INSPECTION TO BE IN ACCORDANCE WITH THE CITY OF WICHITA STANDARD CONSTRUCTION ENGINEERING PRACTICES AND CERTIFIED BY A LICENSED PROFESSIONAL ENGINEER. NO WORK SHALL BE PERFORMED IN DEDICATED EASEMENTS OR THE PUBLIC RIGHT-OF-WAY BY THE CONTRACTOR WITHOUT SUCH INSPECTION NOR SHALL ANY WORK BE COMMENCED IN DEDICATED EASEMENTS OR PUBLIC RIGHT-OF-WAY WITHOUT WRITTEN AUTHORIZATION BY THE CITY ENGINEER.

GENERAL NOTES:

1. THE CONTRACTOR WILL BE REQUIRED TO PROVIDE A MINIMUM ADVANCE NOTICE OF FOURTY-EIGHT (48) HOURS TO UTILITY COMPANIES PRIOR TO STARTING ANY EXCAVATION AS FOLLOWS:

   KANSAS ONE-CALL 1-800-344-7233

   THE CONTRACTOR MUST NOTIFY THE FOLLOWING IN CASE OF EMERGENCY:

KANSAS GAS SERVICE	1-316-832-3177
WESTAR ENERGY	1-316-261-6320
SOUTHWESTERN BELL TELEPHONE COMPANY	1-316-268-2222
CITY OF WICHITA WATER DEPARTMENT	1-316-268-4555
CITY OF WICHITA SEWER MAINTENANCE	1-316-268-4501

2. THE CONTRACTOR SHALL BE RESPONSIBLE FOR PRESERVING PROPERTY IRONS. THE CONTRACTOR SHALL BE REQUIRED TO RE-ESTABLISH ANY PROPERTY IRONS WHICH ARE DAMAGED OR DESTROYED BY HIS CONSTRUCTION OPERATIONS. SUCH IRONS SHALL BE RE-ESTABLISHED BY A LICENSED LAND SURVEYOR IN ACCORDANCE WITH STATE LAWS.

3. EXISTING UTILITIES AND THEIR LOCATIONS, AS SHOWN ON THE PLANS REPRESENT THE BEST INFORMATION OBTAINABLE FOR DESIGN. LOCATION INFORMATION HAS BEEN OBTAINED FROM THE VARIOUS COMPANIES AND IS EITHER FROM COMPANY UTILITY DRAWINGS OR COMPANY PROVIDED FIELD LOCATIONS. THE PLAN LOCATIONS SHOWN ARE NOT GUARANTEED. ADDITIONAL EXISTING UTILITIES MAY ALSO BE ENCOUNTERED.

4. RUBBLE FROM THE REMOVAL OF MISCELLANEOUS STRUCTURES AND EXCESS EXCAVATION WHICH IS TO BE WASTED SHALL BE DISPOSED OF ON SITES TO BE PROVIDED BY THE CONTRACTOR. THESE SITES SHALL BE APPROVED BY THE ENGINEER AS TO SUITABILITY, APPEARANCE AND SITE LOCATION. LOCATIONS THAT, IN THE OPINION OF THE ENGINEER, WILL LEAVE AN UNSIGHTLY APPEARANCE WILL NOT BE APPROVED. ALL DISPOSAL SITES MUST BE APPROVED BY THE KANSAS DEPARTMENT OF HEALTH AND ENVIRONMENT. MATERIAL EITHER STOCKPILED OR DISPOSED OF IN A FLOOD PLAIN WOULD REQUIRE A KANSAS STATE BOARD OF AGRICULTURE PERMIT. ANY MATERIAL DUMPED IN WATERS OF THE UNITED STATES OR WETLANDS IS SUBJECT TO U.S. CORPS OF ENGINEERS PERMITTING REGULATIONS. ANY MATERIAL BURIED OR STOCKPILED BEYOND APPROVED CONSTRUCTION LIMITS WOULD REQUIRE ADDITIONAL ARCHEOLOGICAL INVESTIGATIONS UNLESS BURIED IN A PREVIOUSLY APPROVED BORROW LOCATION.

5. UNLESS SHOWN OR STATED OTHERWISE ON THESE DRAWINGS, MATERIALS AND CONSTRUCTION SHALL BE IN ACCORDANCE WITH CITY OF WICHITA SPECIFICATIONS.

6. SITE RESTORATION AND PREPARATION SHALL BE SUBSIDIARY TO THE PROJECT.

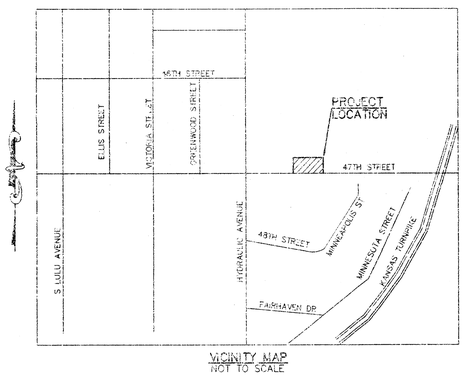

VICINITY MAP
NOT TO SCALE

INDEX TO SHEETS:

1. TITLE SHEET
2. STORM SEWER PLAN AND PROFILE
3. C.O.W. TYPE A INLET DETAIL

UTILITY STATEMENT:
THE UNDERGROUND UTILITIES SHOWN HAVE BEEN LOCATED FROM FIELD SURVEY INFORMATION AND EXISTING DRAWINGS. THE SURVEYOR MAKES NO GUARANTEE THAT THE UNDERGROUND UTILITIES SHOWN COMPRISE ALL SUCH UTILITIES IN THE AREA, EITHER IN SERVICE OR ABANDONED. THE SURVEYOR FURTHER DOES NOT WARRANT THAT THE UNDERGROUND UTILITIES SHOWN ARE IN THE EXACT LOCATION INDICATED ALTHOUGH HE DOES CERTIFY THAT THEY ARE LOCATED AS ACCURATELY AS POSSIBLE FROM INFORMATION AVAILABLE. THE SURVEYOR HAS NOT PHYSICALLY LOCATED THE UNDERGROUND UTILITIES.

CAUTION – NOTICE TO CONTRACTOR
THE CONTRACTOR IS SPECIFICALLY CAUTIONED THAT THE LOCATION AND/OR ELEVATION OF EXISTING UTILITIES AS SHOWN ON THESE PLANS IS BASED ON RECORDS OF THE VARIOUS UTILITY COMPANIES AND, WHERE POSSIBLE, MEASUREMENTS TAKEN IN THE FIELD. THE INFORMATION IS NOT TO BE RELIED ON AS BEING EXACT OR COMPLETE. THE CONTRACTOR MUST CALL THE APPROPRIATE UTILITY COMPANY AT LEAST 48 HOURS BEFORE ANY EXCAVATION TO REQUEST EXACT FIELD LOCATION OF UTILITIES. IT SHALL BE THE RESPONSIBILITY OF THE CONTRACTOR TO RELOCATE ALL EXISTING UTILITIES WHICH CONFLICT WITH PROPOSED IMPROVEMENTS SHOWN ON THE PLANS. **THE CONTRACTOR SHALL EXPOSE EXISTING UTILITIES AT LOCATIONS OF POSSIBLE CONFLICTS PRIOR TO ANY CONSTRUCTION.**

SAFETY NOTICE TO CONTRACTOR
IN ACCORDANCE WITH GENERALLY ACCEPTED CONSTRUCTION PRACTICES, THE CONTRACTOR WILL BE SOLELY AND COMPLETELY RESPONSIBLE FOR CONDITIONS OF THE JOB SITE, INCLUDING SAFETY OF ALL PERSONS AND PROPERTY DURING PERFORMANCE OF THE WORK. THIS REQUIREMENT WILL APPLY CONTINUOUSLY AND NOT BE LIMITED TO NORMAL WORKING HOURS.

WARRANTY / DISCLAIMER
THE DESIGNS REPRESENTED IN THESE PLANS ARE IN ACCORDANCE WITH ESTABLISHED PRACTICES OF CIVIL ENGINEERING FOR THE DESIGN FUNCTIONS AND USES INTENDED BY THE OWNER AT THIS TIME. HOWEVER, NEITHER KAW VALLEY ENGINEERING, INC NOR ITS PERSONNEL CAN OR DO WARRANTY THESE DESIGNS OR PLANS AS CONSTRUCTED, EXCEPT IN THE SPECIFIC CASES WHERE KAW VALLEY ENGINEERING PERSONNEL INSPECT AND CONTROL THE PHYSICAL CONSTRUCTION ON A CONTEMPORARY BASIS AT THE SITE.

BENCHMARK:
BM-1: CHISELED SQUARE ON THE NORTHWEST CORNER OF TRAFFIC LIGHT POLE BASE LOCATED AT THE SOUTHEAST QUADRANT OF HYDRAULIC STREET & 47TH STREET (AS OBTAINED FROM JASON SUKSA, CITY SURVEYOR). ELEV=1272.39

TBM-1: NORTHEAST CORNER OF CURB INLET LOCATED ON THE NORTH SIDE OF 47TH STREET AND APPROXIMATELY 84 FEET EAST AND 17 FEET SOUTH OF THE SOUTHWEST CORNER OF THE SUBJECT PROPERTY. ELEV=1269.90

CONTACT PERSON:

SAMUEL D. MALINOWSKY, P.E., KAW VALLEY ENGINEERING, INC. 785-762-5040

SAMUEL D. MALINOWSKY
PROFESSIONAL ENGINEER — KANSAS — 15535 — 2-28-07

AS-BUILT
Date 9/29/06
By K. E. Miller

NO.	DATE	DESCRIPTION	DSN	DWN	CHK
			SDM	JL	

KAW VALLEY ENGINEERING, INC. — CONSULTING ENGINEERS
Offices: Junction City, Ks. Kansas City, Mo. Lenexa, Ks.
2319 NORTH JACKSON
P.O. BOX 1304
JUNCTION CITY, KANSAS 66441
785-762-5040 FAX 785-762-5044
E-MAIL: KAWENG@KAWENG.COM
WEB SITE: WWW.KAWENG.COM

SONIC DRIVE-IN
47TH STREET & KANSAS STREET
WICHITA, KANSAS

TITLE SHEET

PROJ. NO.	A04_1745
DATE	NOV 2004
DESIGNER	SDM
DRAWN BY	JL
CFN	REV.
1745DTS	
SHEET	1
1 OF 3	

THIS DRAWING SHALL NOT BE UTILIZED BY ANY PERSON, FIRM, OR CORPORATION IN WHOLE OR IN PART WITHOUT THE SPECIFIC PERMISSION OF KAW VALLEY ENGINEERING, INC.

Vandor\Dwg\04_1745\DESIGN\CIVIL\PLAN\1745DTS.dwg, 11/5/2004 2:27:24 PM, Vandorson

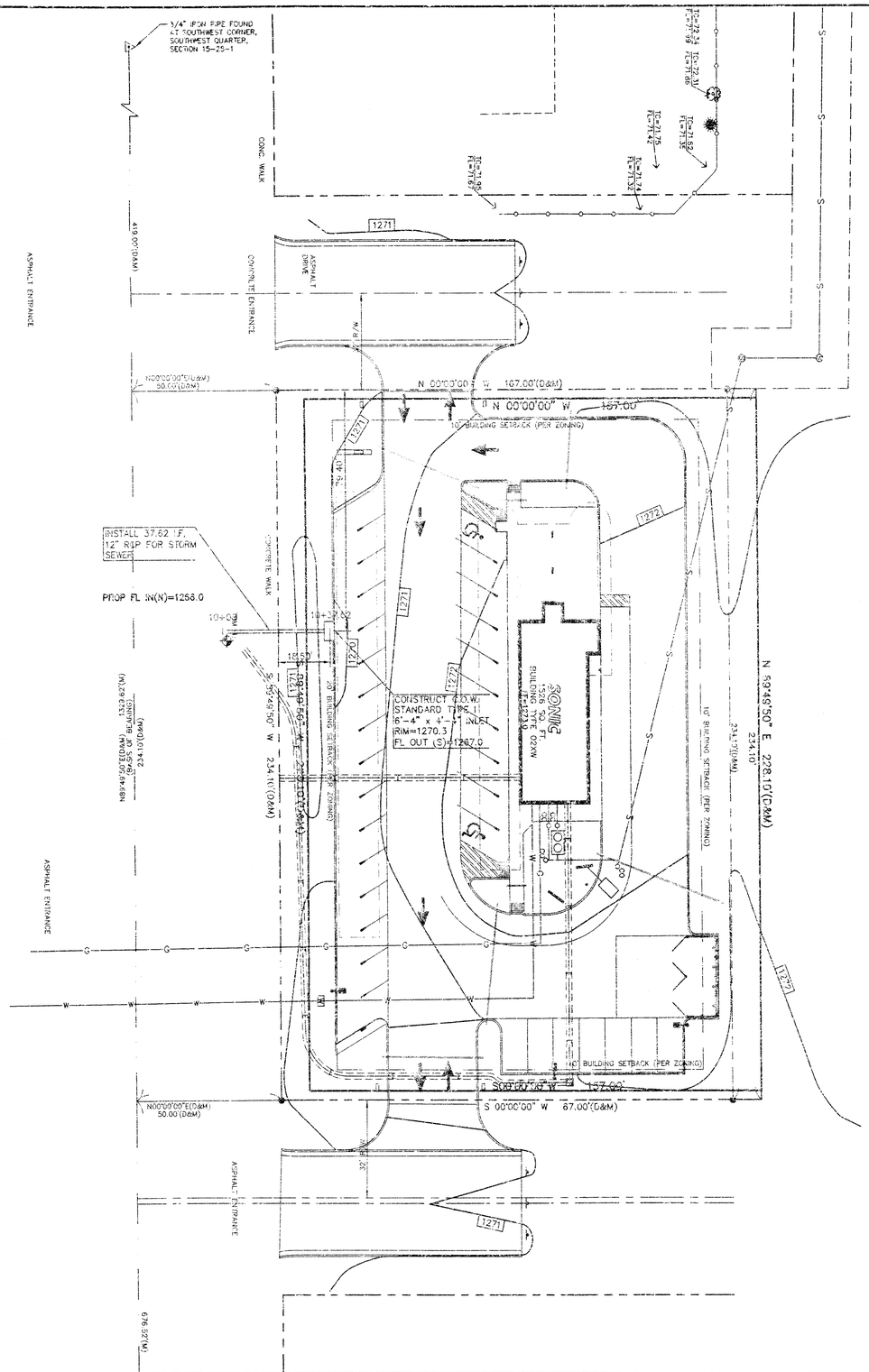

SCALE:
PLAN: 1"=20'
PROFILE: 1"=20' HORIZ
1"=5' VERT

LEGEND (PROPOSED)

82.9 SPOT ELEVATION (ADD 1200).
X TOP OF PAVEMENT

83.6 TOP OF CURB (ADD 1200)
83.1 FLOWLINE OF CURB (ADD 1200)

FLOW DIRECTION

1273 FINISHED 1' CONTOUR INTERVALS, TOP OF PAVEMENT

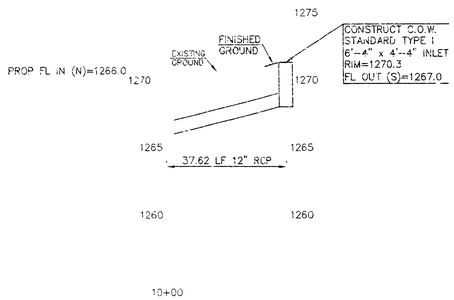

STORM SEWER PROFILE

BENCHMARK:

BM-1: CHISELED SQUARE ON THE NORTHWEST CORNER OF TRAFFIC LIGHT POLE BASE LOCATED AT THE SOUTHEAST QUADRANT OF HYDRAULIC STREET & 47TH STREET (AS OBTAINED FROM JASON SUKSA, CITY SURVEYOR). ELEV=1272.39

TBM-1: NORTHEAST CORNER OF CURB INLET LOCATED ON THE NORTH SIDE OF 47TH STREET AND APPROXIMATELY 84 FEET EAST AND 17 FEET SOUTH OF THE SOUTHWEST CORNER OF THE SUBJECT PROPERTY. ELEV=1269.90

REV	DATE	DESCRIPTION	DSN	DWN	CHK

KAW VALLEY ENGINEERING, INC. - CONSULTING ENGINEERS
Offices: Junction City, Ks. Kansas City, Mo. Lawrence, Ks.
2319 NORTH JACKSON
P.O. BOX 1304
JUNCTION CITY, KANSAS 66441
785-762-5040 FAX 785-762-7741
E-MAIL jkelleng.com
WEB SITE www.kveng.com

SONIC DRIVE-IN
47TH STREET & KANSAS STREET
WICHITA, KANSAS

STORM SEWER PLAN & PROFILE

PROJ. NO.	A04_1745
DATE	NOV 2004
DESIGNER	SDM
DRAWN BY	JL
CFN	STORM\17450PP
SHEET	2 OF 3
REV	1

THIS DRAWING SHALL NOT BE UTILIZED BY ANY PERSON, FIRM, OR CORPORATION IN WHOLE OR IN PART WITHOUT THE SPECIFIC PERMISSION OF KAW VALLEY ENGINEERING, INC.

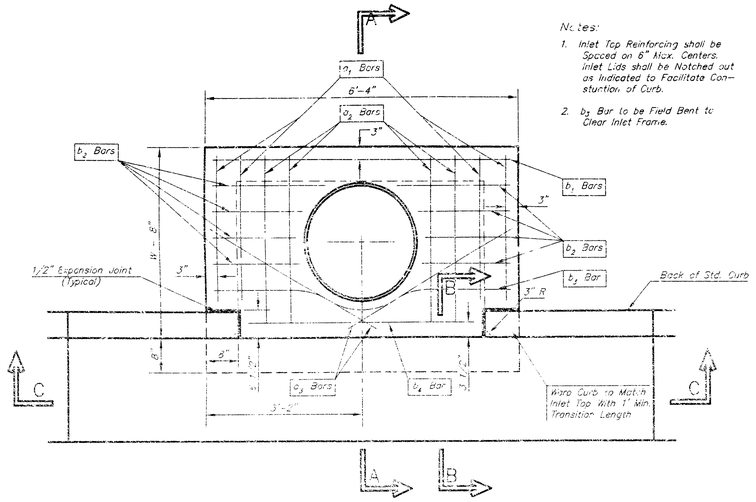

PLAN

Notes:

1. Inlet Top Reinforcing shall be Spaced on 8" Max. Centers. Inlet Lids shall be Notched out as Indicated to Facilitate Construction of Curb.
2. b_4 Bar to be Field Bent to Clear Inlet Frame.

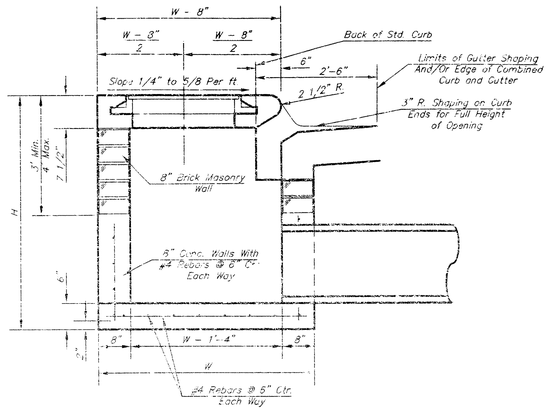

SECTION A-A

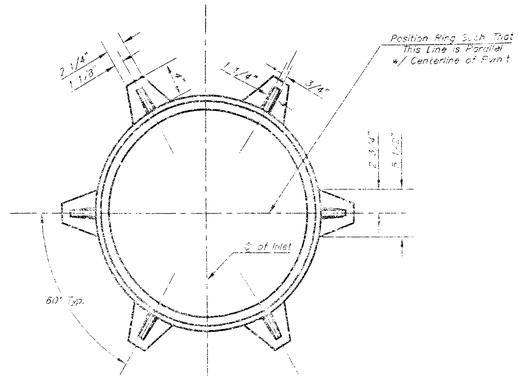

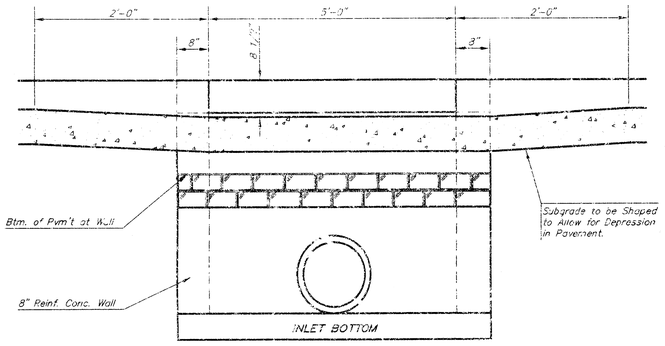

SECTION C-C

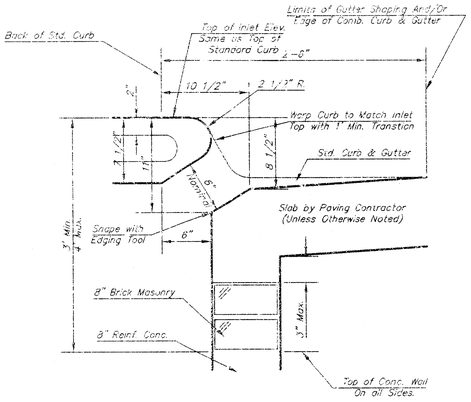

SECTION B-B

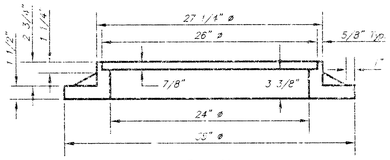

WT. = 130 lbs.

MANHOLE RING AND COVER

*See City of Wichita Standard Manhole Ring and Cover Detail Sheet for Cover Details to Be Used With Inlet Frame.

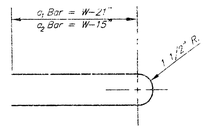

BENDING DIAGRAM

STEEL SCHEDULE

BAR		a_1	a_2	a_3	b_1 W=4'-4"	b_1 W=5'-4"	b_1 W=6'-4"	b_1 W=7'-4"	b_1 W=8'-4"	b_2	b_3	b_4	Wt. Lbs.
NUMBER		4	4	2	1	3	5	7	9	6	1	1	
SIZE		#4	#4	#4	#4	#4	#4	#4	#4	#4	#4	#6	
LENGTH	W=4'-4"	5'-7"	6'-7"	4'-0"	6'-1"	–	–	–	–	1'-9"	6'-2"	4'-8"	60±
	W=5'-4"	7'-7"	8'-7"	5'-0"	–	6'-1"	–	–	–	1'-9"	6'-2"	4'-8"	81±
	W=6'-4"	9'-7"	10'-7"	6'-0"	–	–	6'-1"	–	–	1'-9"	6'-2"	4'-8"	101±
	W=7'-4"	11'-7"	12'-7"	7'-0"	–	–	–	6'-1"	–	1'-9"	6'-2"	4'-8"	121±
	W=8'-4"	13'-7"	14'-7"	8'-0"	–	–	–	–	6'-1"	1'-9"	6'-2"	4'-8"	141±

Note: a_3 Bars to be Placed Approx. 2" Below Top of Inlet Cover.

STANDARD CURB INLET PRECAST TOPS

W	PRE-CAST TOP SIZE		PIPE SIZE	CU. YD. CONC.
4'-4"	5'-8"	6'-4" 7 1/2"	21" & SMALLER	0.38±
5'-4"	6'-8"	6'-4" 7 1/2"	24" & 30"	0.51±
6'-4"	5'-8"	6'-4" 7 1/2"	36" & 42"	0.64±
7'-4"	6'-8"	6'-4" 7 1/2"	48" & 54"	0.77±
8'-4"	7'-8"	6'-4" 7 1/2"	60" & 66"	0.90±

GENERAL NOTES

1. Concrete tops to be installed on thin mortar cushion to insure full support along brick walls. Concrete tops may be cast in place or precast. Concrete used for inlet construction shall be concrete pavement mix.
2. Contractor shall have the option of constructing 8" brick masonry walls between the concrete inlet base and top on this inlet when W=6'-4" and H=7'-0" or less.
3. Inlet invert shall be shaped with 8 sack sand mix concrete to create flow channels and to increase hydraulic efficiency such that the inlet will be self cleaning between all inlet and/or outlet pipes.
4. The ends of all pipes installed in inlets shall be cut off flush with the inside face of the inlet wall.

THE CITY OF WICHITA

CITY ENGINEER'S OFFICE
CITY HALL - SEVENTH FLOOR
455 NORTH MAIN STREET
WICHITA, KANSAS 67202
316) 268-4601
(316) 268-4114 FAX

STANDARD TYPE 1 CURB INLET OPENING = 6" x 5'-0"

M. E. LINDEBAK P.E. - CITY ENGINEER

PROJECT NUMBER	INDEX CODE
A04_1745	XXXXXX
DATE: MAR 96	SHEET 3 OF 3

CFN: STORM\1745STYP1-S

J:\Under\Dwg\A4 1745\DESIGN\STORM\1745STYP1 S.DGN 12-14-95 ---- 4:23 PM, Henderson

AT 10 21 01 JA