S.W.S. 245

STORM SEWER IMPROVEMENTS AT CENTRAL AND WOODLAWN

PROJECT NO.

468-76-245-81242-000-000-001

Index

SHEET NO.	DESCRIPTION
1	Title Sheet
2-6	Plan & Profile
7	Headwall Detail
8	Manhole Dimension
9	Manhole Detail
10	Type 1 Inlet Detail
11	Type 1A Inlet Detail
12	Drop Inlet Detail

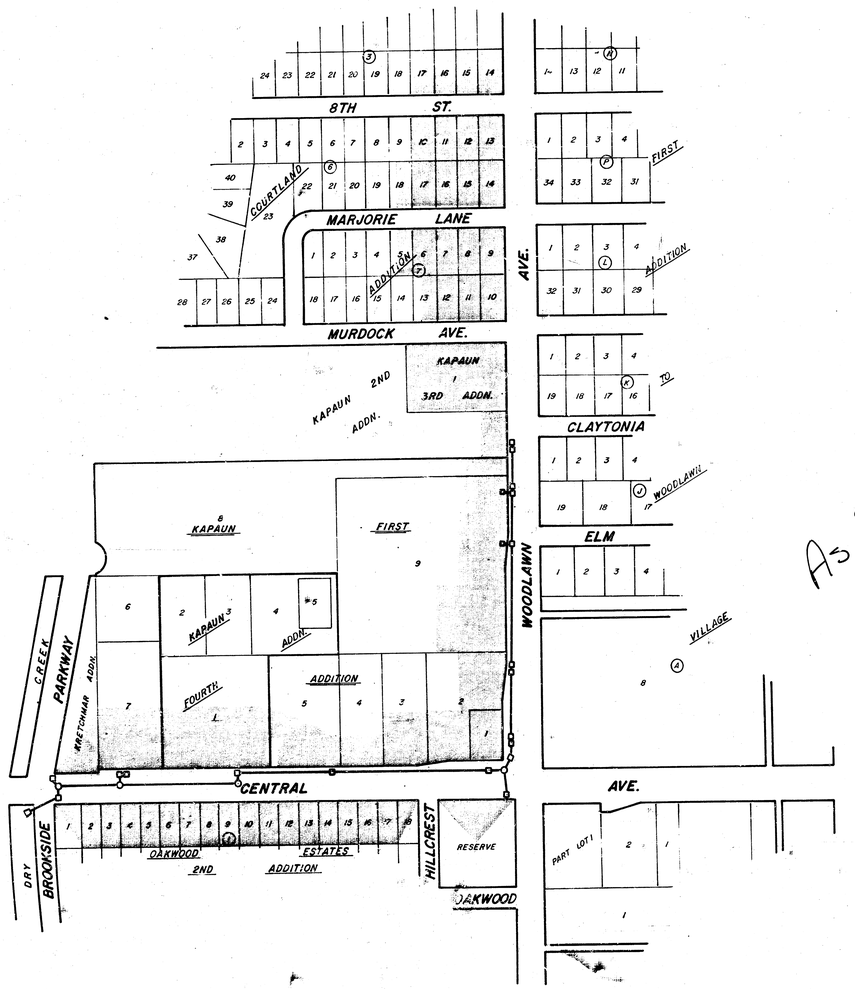

As Builts
6-19-84
MCG

Symbols

- W — Indicates Water Line
- B — Indicates SW Bell UG Line
- G — Indicates Gas Service Line
- E — Indicates KGE UG Line
- Indicates Saw Cut Joint
- Indicates Removal of Pavement, Driveway, or Sidewalk.
- Indicates Tree Removal.

General Notes

1. Contractor is to contact the utility companies for field location and any relocation of existing lines.
2. At least one lane of traffic is to be maintained in each direction on Central Ave. during the construction period.
3. Standard Type I inlets are to be constructed on Central Ave.. Standard Type I-A inlets are to be constructed on Woodlawn Ave.
4. The contractor shall be responsible for preserving property irons. The contractor shall be required to re-establish any property irons which are destroyed or damaged by his construction operations. Such irons shall re-established by a licensed land surveyor or a professional engineer in accordance with state laws.
5. A City Standard Benchmark at the northwest corner of Central and Woodlawn will need to be re-established. The City of Wichita shall be responsible for the relocation.
6. The contractor will be required to work 6-10 hour days a week on this project.
7. During the construction period of the project, no more than one driveway shall be closed to traffic at any time. Once a driveway is closed, the contractor is encouraged to install the sewer and replace the temporary asphalt as expeditiously as possible in order to open the drive to traffic again.
8. Any driveway removed is to be replaced with a 6" temporary asphalt material. Concrete sidewalk removed is to be replaced only where indicated so on the plans.
9. Any pavement removed is to be replaced with 8" reinforced concrete pavement unless noted otherwise on the plans. Reinforcement shall be with wire mesh (6x12 - w6/w4) woven wire fabric. Key joint and No. 4 tie bars shall be constructed at the outer edge along the new pavement sections on the north side of Central. All steel reinforcing shall be considered as incidental to the 8" Concrete Pavement bid item. The new pavement construction shall replace the removed pavement at the same width, location, and elevation, except that temporary asphalt curbing shall be constructed along the north side of Central. Monolithic concrete curbing shall be constructed along the south side of Central. All curbing (temporary asphalt and monolithic) shall be incidental to the 8" Concrete Pavement bid item.
10. The new concrete pavement joints shall match the existing joints in the existing concrete pavement on Central. Existing steel bars extending from the existing pavement at the removal lines are to be utilized to connect the new pavement construction to the old pavement wherever possible. Care should be used when removing the concrete in order to leave as many tie bars in place as possible.
11. Saw joints shall be cut at all removal limits necessary for driveway and street. The Engineer shall determine the amounts of removal and location of saw joints. Saw joints shall be considered as incidental to the removal items.
12. Inlet openings which are not adjacent to existing pavement are to be temporarily bricked shut. Cost of this shall be considered as incidental to the inlets. The pavement contractor will remove the brick and adjust the inlets.
13. Pre-cast inlet tops are to be coated with linseed oil on all surfaces prior to placement on the inlets. Concrete is to be air-entrained.
14. Type 3 Rip-Rap is to be installed at the outfall structure in Dry Creek and shall have a 2 foot toewall on all sides. An acceptable alternate to Type 3 Rip-Rap is the 8" Filter Point Revetment Mat. The contractor is to notify the Engineer of any Alternate usage.

CITY OF WICHITA, KS.

M. E. Lindebak — City Engineer

N. BRENT WOOTEN LICENSED 8470 KANSAS PROFESSIONAL ENGINEER

BAUGHMAN COMPANY, P.A.
SURVEYING & ENGINEERING
316/263-7271 • 330 LAURA • WICHITA, KANSAS 67211

1/12 1/12

BM. 1783' '+' cut on top of S.E. Corner of Hub-guard of R.C.B.C. on Dry Creek & Central.

Construct a temporary 6" Asphalt Surface access way to serve Kansas Lighting. To be removed "By Others".

Sta 0+12.8 Constr. Std. Type 1 Inlet (W=4'2") Top = 1788

Sta 1+29.8 Constr. Std. Reinf. Conc. Manhole (6'2" x 6'2") Top = 1774 = Sta 0+00 Line B

Remove Lighting

Match

PARKWAY

CREEK

KRETCHMAR ADDITION

KAPAUN FIRST ADDN.

KAPAUN FOURTH ADDN.

Sta. 0+32.9 Constr. Std. Type 1 Inlet (W=4'2") Top = 1794

Sta. 0+10.9 Constr. Std. Type 1 Inlet (W=4'2") Top = 1808

80' Utility Easement

60' R/W

136.5'

Proposed Cb. Alignment

Line B

Line 1

Line 3

Remove 18' Cb. & grade transition to match pvmt. Incidental to 6" Asphalt

Saw Joint & Remove Conc. Pavmt. - Replace w 8" Conc. Pavmt. and Curb (Sa. Side)

Remove pavmt. to the existg. joint. Replace w. 8" Conc. pavmt. and temporary asphalt curb. Appl. Cb. to be incidental to conc. pavement.

CENTRAL AVE.

Sta 3+37.8 Constr. Std. Reinf. Conc. Manhole (6'2"x6'2") Top = 1808 = Sta 0+00 Line 3

40' R/W

Scale: Plan: 1"=20' Profile: 1"=5' Vert. 1"=20' Hor.

AS BUILTS 6-19-84 MCG

Do not damage existg. trees.

60' R/W

BROOKSIDE

DRY

Sta. 0+06.8 End Headwall Apron & Begin Pipe Constr.

Sta 0+03.1 Begin Headwall Constr.

Do not Replace this Walk Section

Replace 4" Conc. Sidewalk & Construct 2 - 4' wide wheelchair Ramps.

OAKWOOD ESTATES 2ND ADDITION

Install 106 SY Type 3 Rip-Rap or Alt.

Contractor to Regrade Channel area to match the Rip Rap. Engineer to determine tonburtt of regrading necessary. Cost of regrading to be incidental to Rip-Rap Item.

Construct 36" Reinf. Conc. Headwall Structure.

Install 105 SY Type 3 Rip-Rap or Alt.

Existg. Pond

Existg. Grade

Line 1

60.2' L.F. 42" RCP @ +0.37%

41.3' L.F. 42" RCP @ +0.52%

210.9' L.F. 42" RCP @ +0.57%

360.9' L.F. 42" RCP @ +0.86%

5'-6" x 5'-6" RCP @ +0.00%

Sta 3+37.8

Sta 4+00

Sta 4+50

Sta 5+00

Sta 5+10

Station 0+03.1 0+06.8 0+50 0+80 1+20.2 1+60 2+00 2+50 3+00 3+37.8 4+00 4+50

PLAN SURVEYED PLOTTED NOTE BOOK NO. LOADER CHECKED LAY OUT CHECKED STRUCTURE LOCATING CHECKED ALIGNMENT CHECKED R/W DATE

PROFILE SURVEYED PLOTTED NOTE BOOK NO. LOADER CHECKED LAY OUT CHECKED STRUCTURE LOCATING CHECKED R/W DATE

PLATE 1 PLAN PROFILE ON CLEARPRINT PAPER OR MYLAR NO. 10244-1

S.W.S. 245

STORM SEWER PLAN & PROFILE

CITY OF WICHITA, KS.

PROJECT NO. 468-76-245-81242-000-000-001

BAUGHMAN COMPANY, P.A.
SURVEYING & ENGINEERING
316/262-7271 • 330 LAURA • WICHITA, KANSAS 67211

2/12

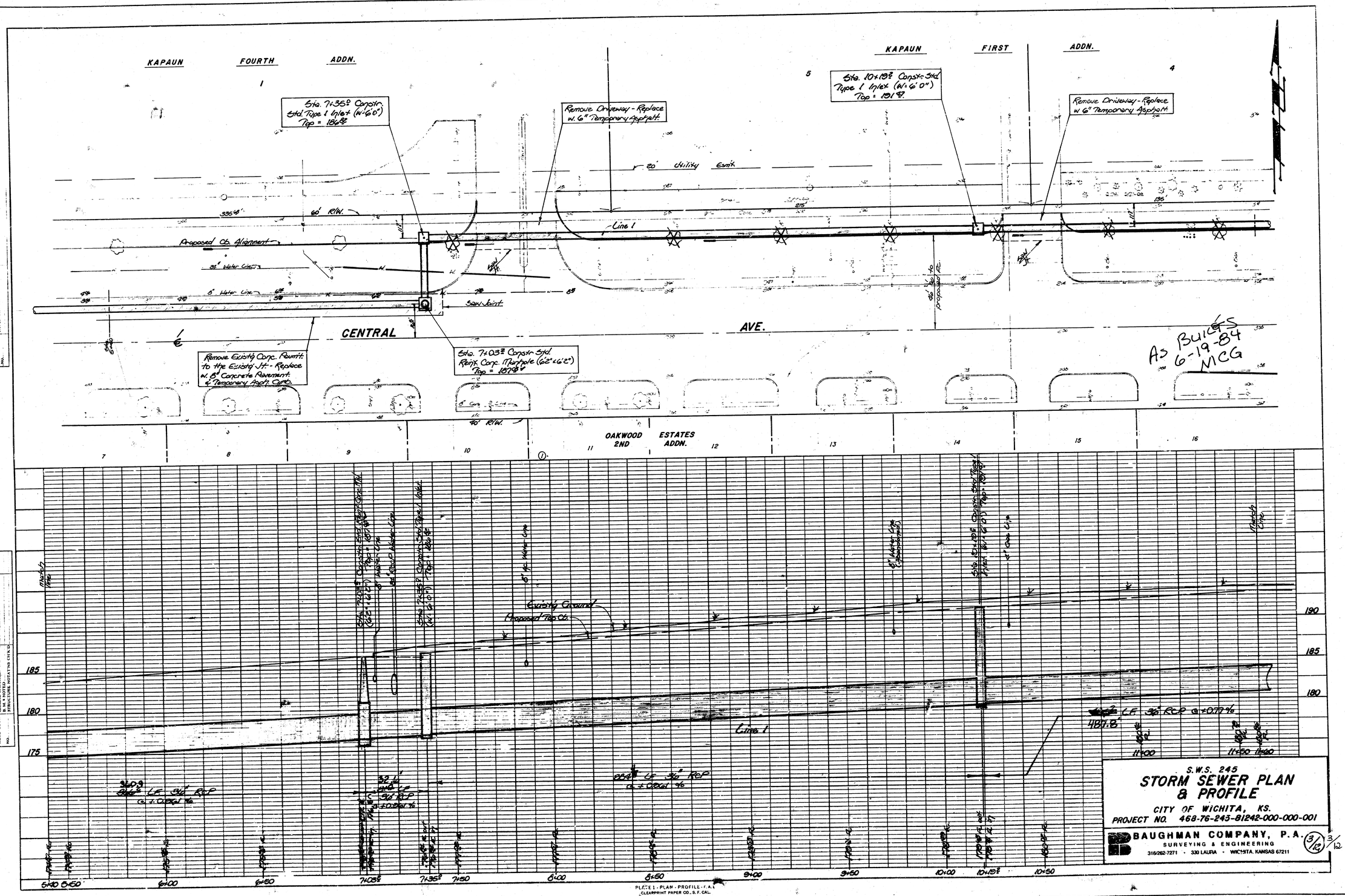

S.W.S. 245

STORM SEWER PLAN & PROFILE

CITY OF WICHITA, KS.

PROJECT NO. 468-76-243-81242-000-000-001

BAUGHMAN COMPANY, P.A.
SURVEYING & ENGINEERING
316/262-7271 · 330 LAURA · WICHITA, KANSAS 67211

3/12 3/12

B.M. 1923 City Std. Disc. 44' West & 56' North of E. Central & Woodlawn

KAPAUN FIRST ADDITION

Remove Driveway - Replace w. 6" Temporary Asphalt

Remove Dr. - Replace w. 6" Temp. Asphalt

Sta. 15+05.8 Constr. Std. Type 1 Inlet (W= 6'0") Top = 1928

Do not Replace Sidewalks.

B.M. Std. See Sheet 5

Proposed Median Island

WOODLAWN AVE.

Sta. 15+53.8 Constr. Std. Reinf. Conc. Manhole (6'2"x7'2") Top = 1928

= Sta. 0+00 Line 2

= Sta. 0+06.2 Line 5

Saw Jt. Remove Pavmt. Repl. w. 6" Temp. Asphalt

Sta. 0+79.8 Constr. Std Type 1 Inlet (W=4'2") Top = 1927

CENTRAL

OAKWOOD ESTATES 2ND ADDN.

HILLCREST

RESERVE

As Builts 6-19-84 MCG

PLAN (REVISED) NOTE BOOK ALIGNMENT No.

PROFILE (REVISED) NOTE BOOK (HILLCREST) No. SCRIBE LINES INDICATES OVERLAY

Existing Ground

Proposed Top Of Curb

Line 1

Line 2

Line 4

Line 5

Sta. 15+05.8 Curb Inlet Top = 1927.90 Inv. = 1923.90

Sta. 15+53.8 Curb Inlet Top = 1928.74 Inv. = 1923.74

Sta. 0+00 Connect to Sta. 15+53.8 Line 4

Sta. 0+00 Connect to Sta. 15+53.8 Line 2

Sta. 0+06.2 Connect to Sta. 15+53.8 Line 5

Sta. 0+00 Connect to Sta. 15+53.8 Line 1

Sta. 0+00 Connect to Sta. 15+53.8 Line 4

Sta. 0+00 Connect to Sta. 15+53.8 Line 2

Sta. 0+06.2 Connect to Sta. 15+53.8 Line 5

Line 1

192.18 Inv. 188.18 L.F. 36" RCP @ +0.77 %

192.18 Inv. 188.18 L.F. 36" RCP @ +0.77 %

Line 4

72.8' L.F. 15" RCP @ +0.86 %

195 190 185 180

11+60 12+00 12+50 13+00 13+50 14+00 14+50 15+05.8 15+53.8

0+00 0+60 0+106.2

PLATE 1 - PLAN - PROFILE - P.A.S. (EXCEPTIONS NOTED TO S.P.S.)

S.W.S. 245

STORM SEWER PLAN & PROFILE

CITY OF WICHITA, KS.

PROJECT NO. 468-76-245-81242-000-000-001

BAUGHMAN COMPANY, P.A.

SURVEYING & ENGINEERING

316/262-7271 • 330 LAURA • WICHITA, KANSAS 67211

4/12

4/12

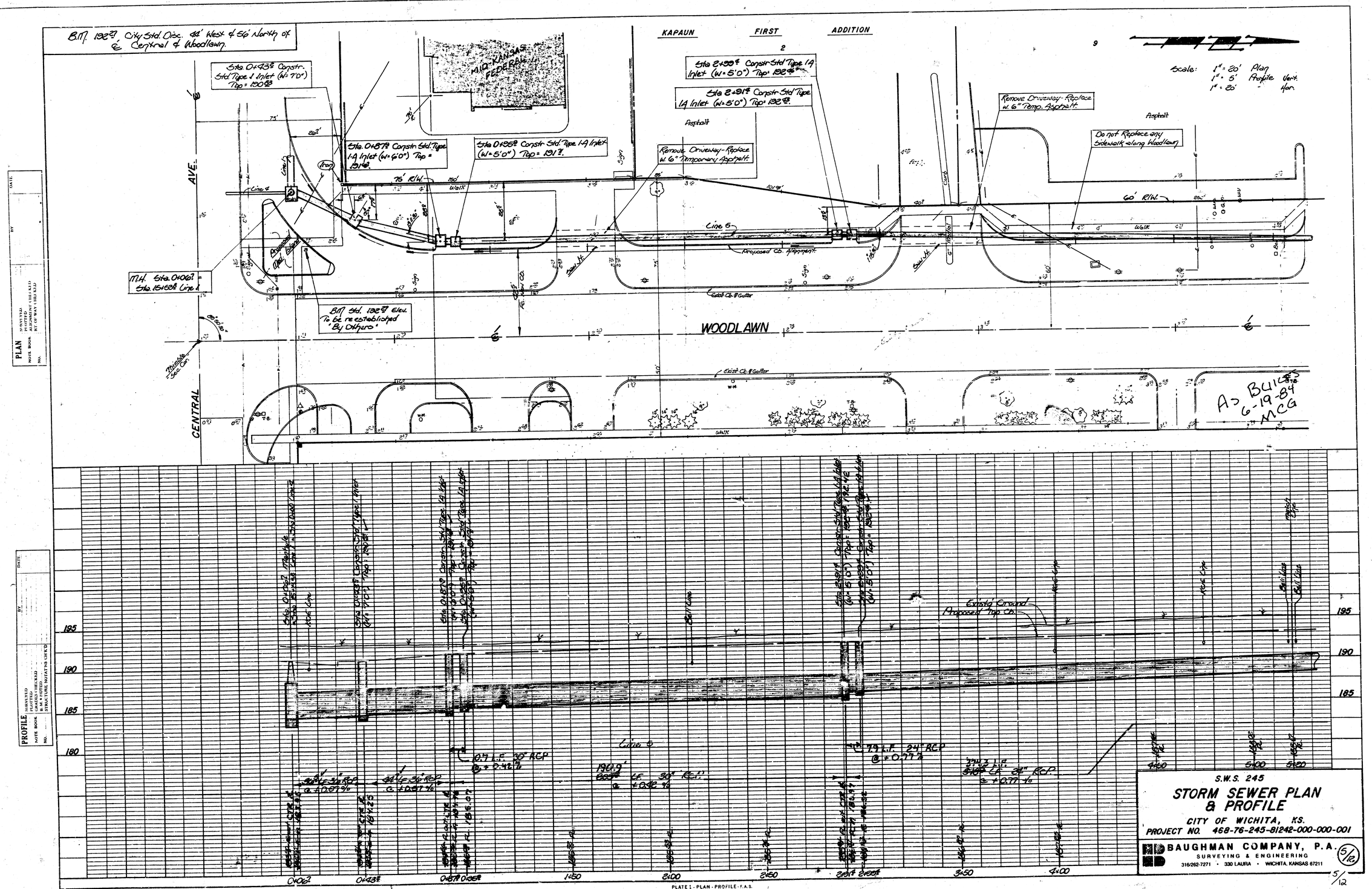

S.W.S. 245

STORM SEWER PLAN & PROFILE

CITY OF WICHITA, KS.

PROJECT NO. 468-76-245-81242-000-000-001

BAUGHMAN COMPANY, P.A.
SURVEYING & ENGINEERING
316/262-7271 • 330 LAURA • WICHITA, KANSAS 67211

5/12

PLATE 1 - PLAN - PROFILE - F.A.S.
CLEARPRINT PAPER CO., S.F. CAL.
NO. 1000H 1

KAPAUN FIRST ADDN.

KAPAUN SECOND ADDN.

Scale 1" = 20' Plan
1" = 5' Profile Horiz.
1" = 20' " Vert.

Note - Contractor to restore or replace any lawn sprinklers or sprinkler pipe on private property which may be disturbed or destroyed due to the storm sewer construction.

Sta. 6+698 Constr. Std. Type 1A Inlet (W=5'0") Top= 1938 = Sta 0+00 Line 6

Sta. 0+329 Constr. Std. Drop Inlet Top = 1948

Remove Or. - Replace w/ 6" Temp. Aspl.

SAW Jt. & Remove Asphalt Parking Drive as indicated. Construct Nor. Standard Curb (detail sheet 9) to match existing & Constr. 6" Asphalt Surface. Material to drain to the new drop inlets.

Sta. 0+278 Constr. Std. Drop Inlet Top = 1948

Sta. 8+198 Constr. Std. Type 1A Inlet (W=4'8") Top= 1948 = Sta 0+00 Line 7

Sta. 8+278 Constr. Std. Type 1A Inlet (W=4'2") Top= 1948

Remove Or. - Replace w/ 6" Temp. Aspl.

Sta. 9+498 Constr. Std. Type 1A Inlet (W=4'2") Top= 1958

Sta. 9+568 Constr. Std. Type 1A Inlet (W=4'2") Top= 1958

(9) See Note this sheet

60' Sewer Easement

60' R/W

50' R/W

20' Sewer Easement

Line 6

Line 7

Line 5

Exist. Curb Line

Proposed Cl. Alignment

Remove Existg. 36" Flume.

Do not damage existg. tree.

Remove Existg. 36" Flume.

Do not damage existg. tree.

WOODLAWN

Exist. Ch. Rig.

Drs.

ELM

CLAYTONIA

As Builts 6-19-84 MCG

(9) Note - The Contractor shall regrade, fertilize, and seed all disturbed areas of private property behind the R/W line. Grass seed used shall match the existing grass type. The contractor shall also either replace the disturbed sprinkler pipe system on private property or construct around the pipes without damage. The cost of the grading, fertilizing, seeding, and any pipe rework on private property shall be considered as incidental to the std. drop inlets.

PLAN — SURVEYED — DRAWN — PLOTTED — CHECKED — NOTE BOOK — QUANTITY CHECKED — R/W & NOTED — PROFILE — NO. — BY — DATE

PROFILE — SURVEYED — DRAWN — PLOTTED — GRADES CHECKED — NOTE BOOK — R/W & NOTED — PROFILE — NO. — BY — DATE

Existg Ground
Proposed Top Cb.

Line 5

Line 6

Line 7

Exist. Grd.

8.5 L.F. 15" RCP @ +0.86%

124 L.F. 15" RCP @ +0.86%

8.5 L.F. 15" RCP @ +0.86%

140 L.F. 24" RCP @ +0.77%

140 L.F. 24" RCP @ +1.00%

195
190
185
180

5+20 5+50 6+00 6+50 6+69 7+00 7+50 8+00 8+19 8+27 8+50 9+00 9+46 9+56

S.W.S. 245

STORM SEWER PLAN & PROFILE

CITY OF WICHITA, KS.

PROJECT NO. 468-76-245-81242-000-000-001

BAUGHMAN COMPANY, P.A.
SURVEYING & ENGINEERING
316/262-7271 • 330 LAURA • WICHITA, KANSAS 67211

6/12

6/12

PLATE 1 - PLAN - PROFILE - F.A.S.
CLEARPRINT PAPER CO., S.F. CAL.
NO. 1000H-I

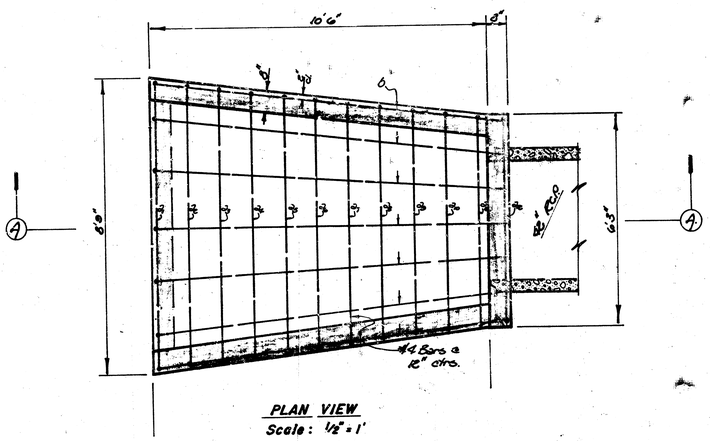

PLAN VIEW
Scale: 1/2" = 1'

LISTING OF BARS, DIMENSIONS, & QUANTITIES

Bar	Number	Length	Weight
a_1	1	12'3"	8.52 lb.
a_2	1	13'2"	9.60 -
a_3	1	13'5"	9.96 -
a_4	1	13'10"	9.34 -
a_5	1	14'1"	9.41 -
a_6	1	14'6"	9.68 -
a_7	1	14'9"	9.85 -
a_8	1	15'2"	10.13 -
a_9	1	15'6"	10.35 -
a_{10}	1	15'9"	10.52 -
a_{11}	1	16'2"	10.80 -
a_{12}	1	19'3"	13.19 -

Bar	Number	Length	Weight
b	7	15'2"	61.57 lb.
c_1	2	5'11"	7.90 -
c_2	3	8'5"	16.87 -
f_1	2	11'4"	15.14 -
f_2	2	11'2"	14.92 -
f_3	2	10'11"	14.58 -
j_1	2	5'0"	6.68 -
j_2	2	3'6"	4.68 -

Total Reinforcing Steel = 261.8 lbs.
Total Concrete = 4.65 c.y.

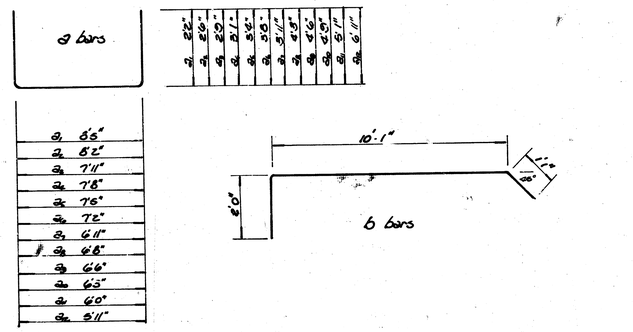

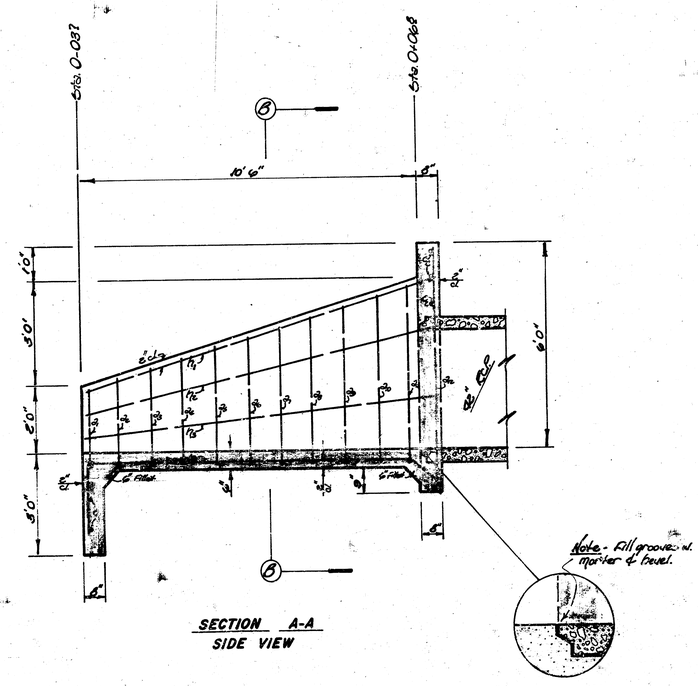

SECTION A-A
SIDE VIEW

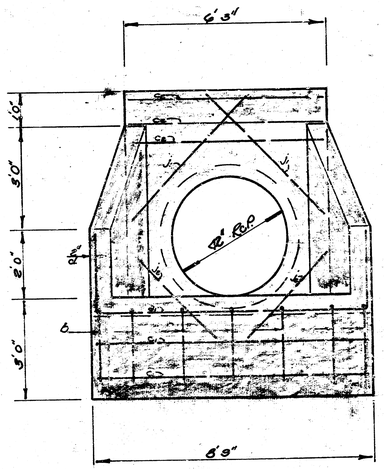

SECTION B-B
END VIEW

Note:

All Reinforcing Bars to be #4 Bars - 1/2" ø.
All Bars to be straight except Type 'a' & 'b' bars shown.
All Edges to have 1/2" beveled edges. Contractor is to fill all grooves w. mortar and bevel finish.
All Reinforcement (Horizontal) to be supported on metal supports or spacers. The Engineer shall approve all supports & ties made.
Class A Concrete(ge) is to be used thru-out the structure.

S.W.S. 245
42" HEADWALL STRUCTURE DETAIL
CITY OF WICHITA, KS.
PROJECT NO. 468-76-245-81242-000-000-001

BAUGHMAN COMPANY, P.A.
SURVEYING & ENGINEERING
316/262-7271 • 330 LAURA • WICHITA, KANSAS 67211

7/12

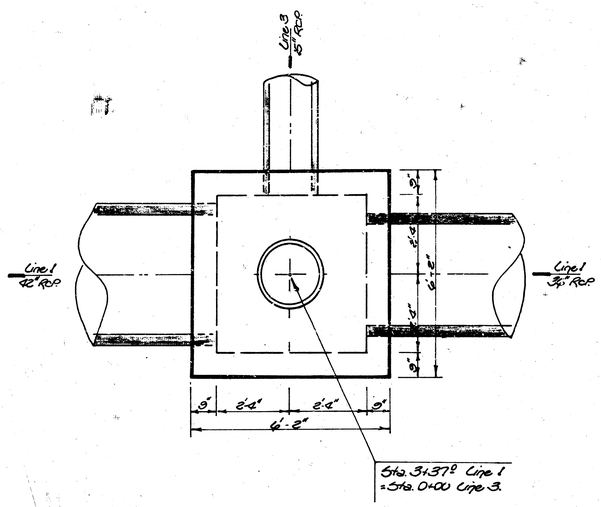

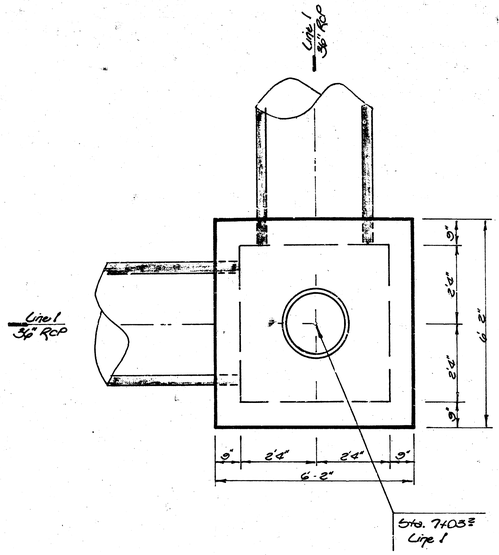



Scale:
1/2" = 1"

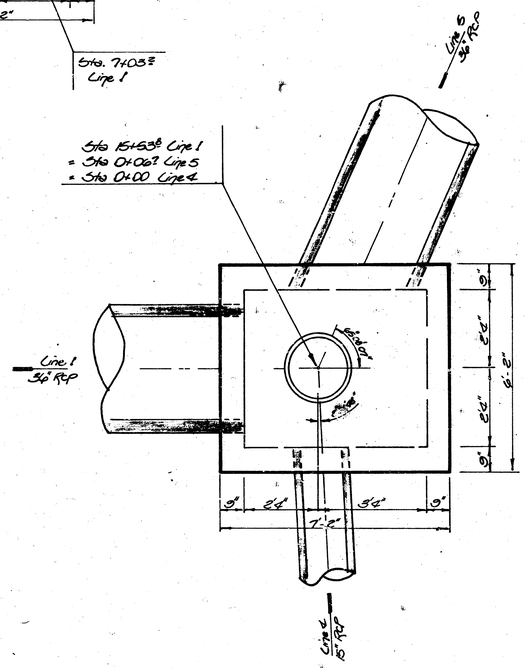

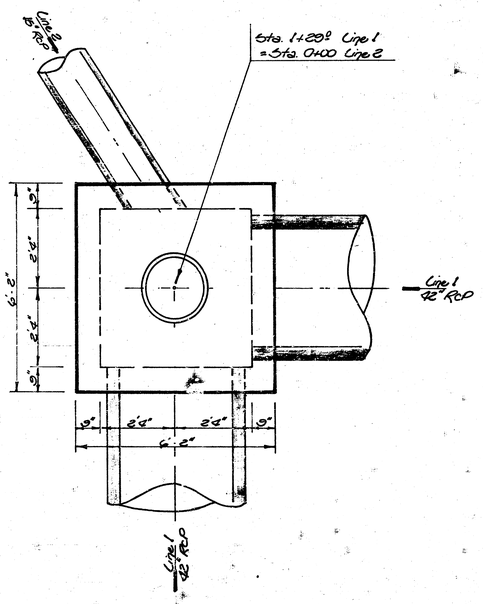

Note:

All Manholes are to be Standard Reinforced Concrete Manholes. See Detail on Sheet 9.
Concrete to be used in Manhole Construction shall be 6-Sack Paving Mix.
The floors of the Manholes shall be shaped and smooth.

S.W.S. 245

MANHOLE ALIGNMENT & DIMENSION DETAIL

CITY OF WICHITA, KS.

PROJECT NO. 468-76-245-81242-000-000-001

BAUGHMAN COMPANY, P.A.
SURVEYING & ENGINEERING
316/262-7271 • 330 LAURA • WICHITA, KANSAS 67211

8/12

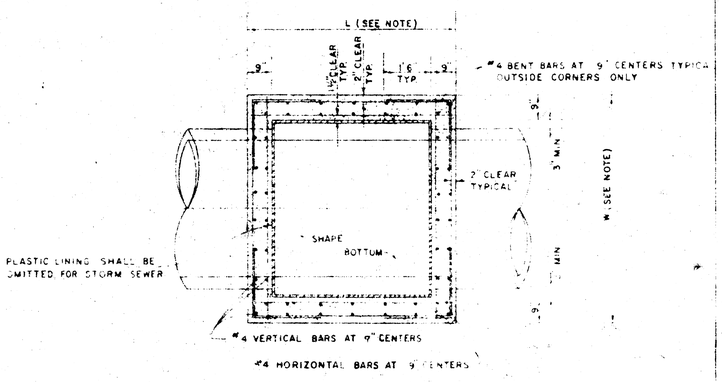

TOP VIEW

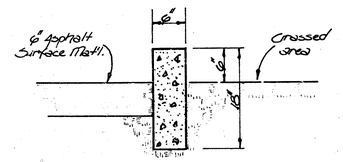

DETAIL

NON-STANDARD CONCRETE CURB SECTION

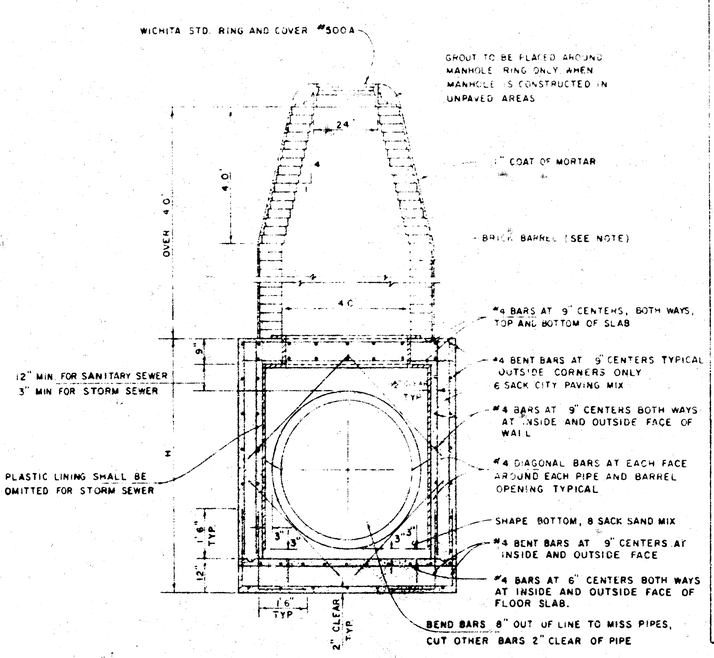

REINFORCED CONCRETE MANHOLE
DEPTH OF STACK: OVER 4.0'
SCALE 1" = 2'

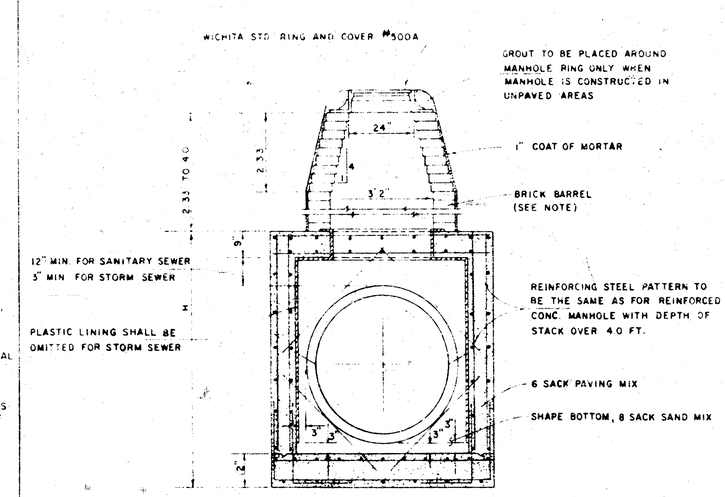

REINFORCED CONCRETE MANHOLE
DEPTH OF STACK: 2.33' TO 4.0'
SCALE 1" = 2'

NOTE

BRICK BARRELS LESS THEN 16' DEEP SHALL HAVE 8" WALLS EXCEPT WHEN LOCATED WITHIN PUBLIC STREET OR ALLEY PAVEMENT THEN THE WALL SHALL BE 12" BRICK BARRELS MORE THEN 16' DEEP SHALL HAVE 12" WALLS. THE "L" AND "W" DIMENSIONS SHALL BE A MINIMUM OF 5'6" FOR BRICK BARRELS WITH 8" WALLS AND 6'2" FOR BRICK BARRELS WITH 12" WALLS.

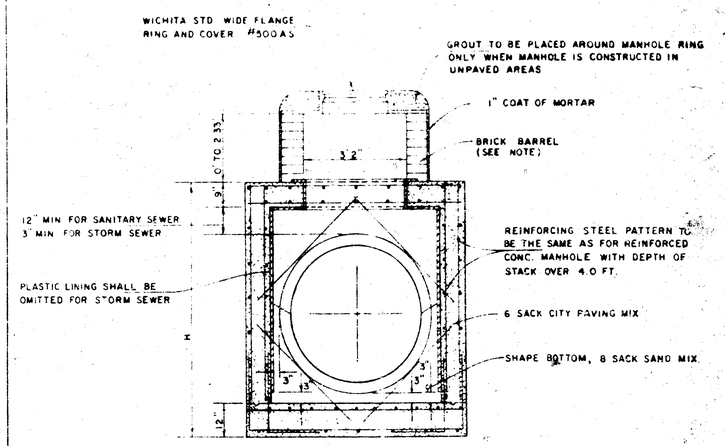

REINFORCED CONCRETE MANHOLE
DEPTH OF STACK: 0' TO 2.33'
SCALE 1" = 2'

STANDARD DETAILS
REINFORCED CONCRETE MANHOLES

APRIL 1978 REVISED APRIL 1980 9/12

CITY OF WICHITA, KANSAS
STANDARD CURB INLET-TYPE I
DETAIL

FEBRUARY, 1972

THIS TYPE INLET TO BE USED WHEN PAVEMENT IS ASPHALT PAVEMENT WITH CONCRETE BASE, AND/OR WHEN PAVEMENTS HAVE LIFT HEIGHT STANDARD CURBS

SEE SEWER MAINTENANCE DETAIL SHEET FOR MANHOLE COVER

MANHOLE RING

BACK GRADE AT MANHOLE
MATERIALS DESIGNATION C25 FOR MANHOLE
THE AMERICAN SOCIETY FOR TESTING AND
CONFORM WITH THE LATEST VERSION OF
BACK FOR INLET CONSTRUCTION SHALL

SECTION C-C
SCALE 1"=1'-0"

6" PAVING MIX CONCRETE
SLAB BY PAVING CONTRACTOR
4" PAVEMENT TO ALLOW FOR DEPRESSION SUBGRADE TO BE SHAPED
CURB OPENING
B
S.O.
4'-4"
S.O.

SECTION B-B
SCALE 1"=1'-0"

6" STD. CURB & GUTTER
(UNLESS OTHERWISE NOTED) SLAB BY PAVING CONTRACTOR
S.B.
B
S.B.
OF CURB BACK
ON HIGH EDGE OF CURB SLAB & GUTTER MAKE LINE ON CONCRETE PAVEMENT

LENGTH	W=6'-0"	8'-1"	10'-1"	2'-7"	-	-	2'-2"	1'-7"	2'-6"	4'-0"	8'-3"
	W=2'-0"	7'-1"	8'-1"	4'-7"	-	2'-2"	-	1'-7"	2'-6"	4'-0"	7'-3"
	W=4'-5"	2'-2"	6'-2"	2'-1"	2'-2"	-	-	1'-7"	2'-6"	4'-0"	6'-0"
NUMBER		4	4	5			5	6			
SIZE -		#8	#8	#8	#4	#4	#4	#4	#4	#6	
BAR		a'	a²	a³	W=6'-0"	W=2'-0"	b⁵	b²	b³	b⁴	TOP

NOTE: A² BARS TO BE PLACED APPROXIMATELY 5" BELOW TOP OF INLET COVER

OPENING WITH SMOOTH CURVES - SHAPE CURB AND/OR GUTTER AT INLET

FOOTING SHALL BE 6" STD. PAVING MIX OR PRECAST CONCRETE BOX INLET TOPS AND ANGLE CONCRETE TOPS MAY BE CAST IN PLACE CUSHION TO INSURE FULL SUPPORT OF ALL BRICK CONCRETE TOPS TO BE INSTALLED ON THIN MORTAR

CROSS SECTION

W	SIZE	PIPE SIZE	CL TO CONC
4'-5"	3'-6"x2'-6"x1'-1"	24"	0'-9"
5'-0"	4'-4"x2'-6"x1'-1"	30" & 36"	0'-11"
6'-0"	5'-4"x2'-6"x1'-1"	42" & 48"	1'-1"

6" STD CURB INLET CONCRETE TOP

SECTION A-A
SCALE 1"=1'-0"

W
W-1'-4"
8"
6" STD. PAVING MIX CONCRETE
(UNLESS OTHERWISE NOTED) SLAB BY PAVING CONTRACTOR
5'-6"
5 1/2" R
VARIES
W-8"
1'-0" TO 1'-2"
2'-0"
SECTION A-A

PLAN
SCALE 1"=1'-0"

A BAR = W-1'-1"
3"
A BAR = W-1'-1"
A
B
C
5'-10"
a⁵ pair
a⁵ pair
a¹ pair
a² pair
a² pair
a³ pair
a³ pair
a⁴ pair
a⁴ pair
3" EXPANSION JOINT
3" EXPANSION JOINT
B-W
B
2'-6"
A
C

NOTE
b⁵ pair
b⁵ pair to be laid next to each other
b⁴ pair
b⁴ pair
b⁵ pair
b⁵ pair

22" DIA
54" DIA
1'-6"
1'-6"
1'-6"
52 3/4" DIA
51" DIA
(TYP.)
60° (TYP.)
1'-6"

CITY OF MICHITA, KANSAS

DETAIL STANDARD TYPE IA CURB INLET

(1) REV: 8-15-81

NOTE: MANHOLE FRAMES AND COVER ARE
WESTERN IRON AND FOUNDRY CO INC OR
EQUAL DESIGNS AS FOLLOWS:
FRAME: 254-15
FRAME (ALTERNATE): 200 AA
COVER: 555 24" MODEL

SECTION B - B
(SCALE 1" = 8")

SECTION C - C
(SCALE 1" = 1'-0")

C-24 FOR MANHOLE BRICK GRADE RM.
FOR TESTING AND MATERIALS DESIGNATION
REVISION OF THE AMERICAN SOCIETY
SHALL CONFORM WITH THE LATEST
NOTE: BRICK FOR INLET CONSTRUCTION

PAVEMENT BY PAVING CONTRACTOR

OPTIONAL KEYED JOINT

1" BELOW STD GUTTER

HIGH EDGE

STD CURB
BACK OF

TOP OF INLET SAME AREA
AS TOP OF STD. CURB

MANHOLE COVER
(SCALE 1" = 8")
WEIGHT = 170 LBS.

MANHOLE FRAME
(ALTERNATE)
(SCALE 1" = 8")
WEIGHT = 180 LBS.

MANHOLE FRAME
(SCALE 1" = 8")
WEIGHT = 180 LBS.

* NOTE: d5 BARS TO BE PLACED APPROX. 5" BELOW TOP OF INLET COVER

STEEL SCHEDULE

BAR	d1	d2	d3 W=4'-5"	d3 W=5'-0"	d3 W=6'-0"	d3 W=7'-0"	d3 W=8'-0"	d4	d5	d6	d7	WT. LBS.
NUMBER	6	5	1	3	5	7	9	6	1	1	1	
SIZE	#5	#5	#5	#5	#5	#5	#5	#5	#5	#5	#5	
TRENCH W=4'-5"	60"	57"	2'-2"	2'-2"	2'-2"	2'-2"	2'-2"	1'-2"	2'-6"	2'-2"	1'-8"	15#
TRENCH W=5'-0"	77"	74"	2'-2"	2'-2"	2'-2"	2'-2"	2'-2"	1'-2"	2'-6"	2'-2"	2'-1"	19#
TRENCH W=6'-0"	101"	98"	2'-2"	2'-2"	2'-2"	2'-2"	2'-2"	1'-2"	2'-6"	2'-2"	2'-7"	25#
TRENCH W=7'-0"	125"	122"	2'-2"	2'-2"	2'-2"	2'-2"	2'-2"	1'-2"	2'-6"	2'-2"	3'-1"	30#
TRENCH W=8'-0"	149"	146"	2'-2"	2'-2"	2'-2"	2'-2"	2'-2"	1'-2"	2'-6"	2'-2"	3'-7"	35#

* CROSS VOLUME

STANDARD CURB INLET PRECAST TOPS			
W	PRE-CAST TOP SIZE	PIPE SIZE	CU.YD. CONC.
4'-5"	3'6"x2'8"x14"x12"	15" Ø SMALLER	0.36 *
5'-0"	4'0"x2'8"x14"x12"	15" Ø 30" Ø	0.42 *
6'-0"	4'4"x2'8"x14"x12"	24" Ø 36" Ø	0.49 *
7'-0"	4'8"x2'8"x14"x12"	30" Ø 42" Ø	0.56 *
8'-0"	5'0"x2'8"x14"x12"	36" Ø 48" Ø	0.63 *

BENDING DIAGRAM

PLAN (SCALE 1" = 1'-0")

ASPHALT PAVING CURB
HIGH EDGE
STD. GUTTER
1" BELOW STD. GUTTER
1" BELOW STD. GUTTER
STD. GUTTER
BEVELLED INLET TOP
TOP THIS 8" AT EACH END
DO NOT BEVEL INLET
S, 10½"
S, 0"
S, 0"
15" R
15" R
MATCH INSIDE OF INLET
TRANSITION CURB TO
SMALL THROUGH RADIUS
1½" EXPANSION JOINT
(TYPICAL)
d2 pair
d4 pair
d3 pair
d5 pair
d5 pair
d1 pair
d1 pair
d2 pair
B
B
M-8"
S, 8½"
A
A
C
C
NOTE: d2 pair to be field bent
to clear manhole frame.

SECTION A - A
(SCALE 1" = 1'-0")

NOTE: CONCRETE TOPS TO BE INSTALLED ON
THIN MORTAR CUSHION TO INSURE EVEN
SUPPORT ALONG BRICK WALLS. CONCRETE
TOPS MAY BE CAST IN PLACE OR PRECAST.
CONCRETE FOR INLET TOPS AND FLOORS
SHALL BE STANDARD PAVING MIX.

W
8"
W-1'-4"
8"
3"
H
6"
S
VARIES
OR 1'-6"
W-8"
1'-6"
S, 0"
1" BELOW STD. GUTTER
STD CURB
BACK OF
HIGH EDGE

STANDARD DETAILS

DROP INLET

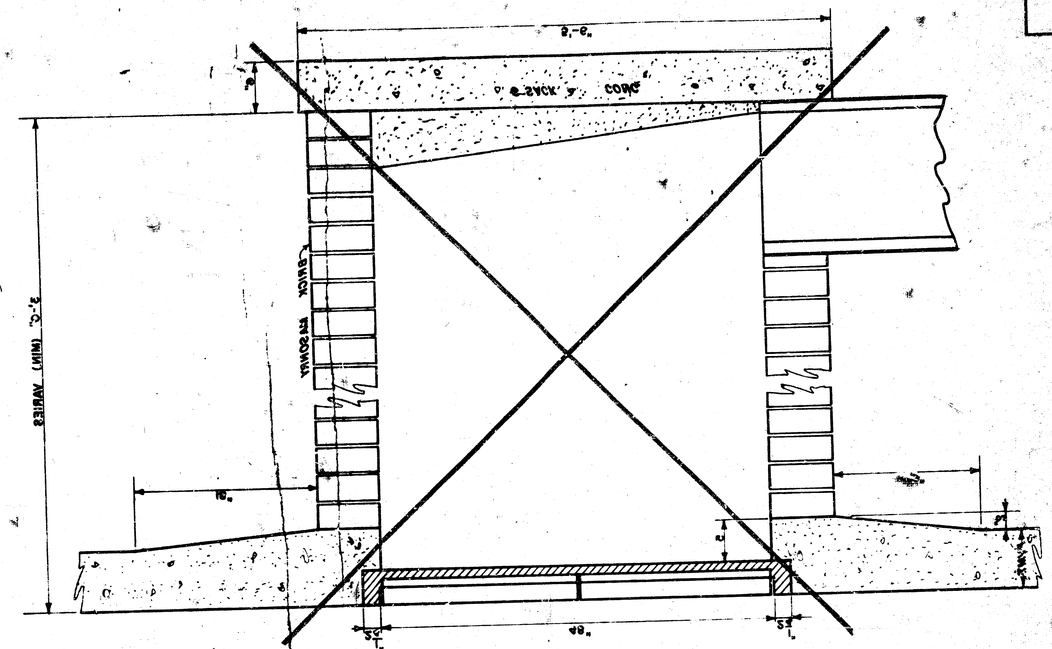

Double 24"x24" Frame Detail

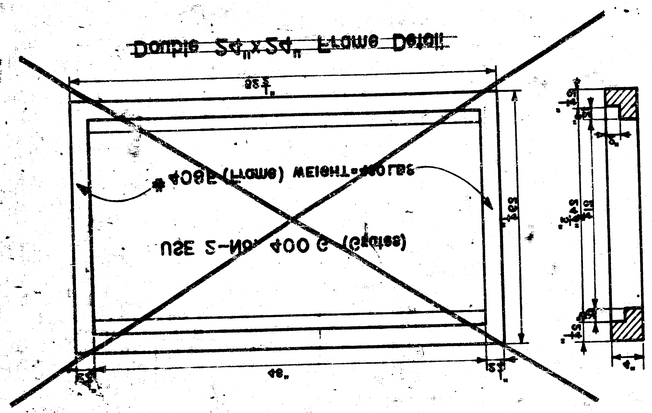

24"x24" Frame & Grate Detail

