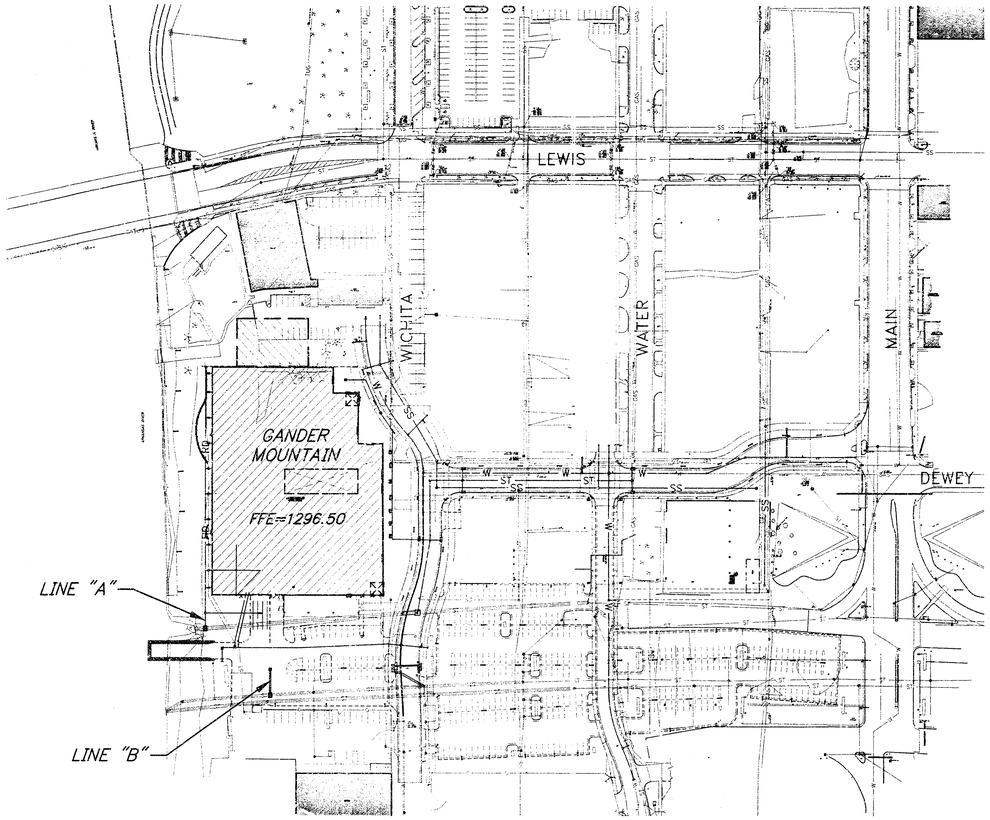

GRAPHIC SCALE

100 0 50 100 200

(IN FEET)
1 inch = 100 ft.

GENERAL NOTES

1. All elevations shown are U.S.G.S. datum. (U.S.G.S. - 1187.4 = City of Wichita datum)

2. Contractor will be required to provide a minimum advance notice of forty-eight (48) hours to utility companies prior to starting any excavation as follows:

Kansas One-Call 687-2470

The Contractor must notify the following in case of an emergency:

Cox Communications	262-0661
Kansas Gas Service	832-3169
Westar Energy	383-9500
Aquila Network	1(800)-527-0357
SBC	1(800)-870-8390
City of Wichita Water Department	262-6000
City of Wichita Sewer Department	262-6000

STORM SEWER

TO SERVE

GANDER MOUNTAIN

DEWEY STREET & WICHITA STREET

PRIVATE PROJECT NO. 1560 PPS (607861)

CITY OF WICHITA

JAMES ARMOUR, CITY ENGINEER

MAY 2005

APPROVED AS NOTED
BY CITY ENGINEER OF WICHITA

Sanitary Sewers _____
Storm Sewers VRF 6-2-05
Driveway Approaches _____
Water Mains _____
Paving _____

NOTE TO CONTRACTOR

INSPECTION AND TESTING FOR THIS PROJECT IS TO BE PROVIDED BY A LICENSED CONSULTING ENGINEERING FIRM UNDER CONTRACT WITH THE OWNER/DEVELOPER. SAID INSPECTION TO BE IN ACCORDANCE WITH THE CITY OF WICHITA STANDARD CONSTRUCTION ENGINEERING PRACTICES AND CERTIFIED BY A LICENSED PROFESSIONAL ENGINEER. NO WORK SHALL BE PERFORMED IN DEDICATED EASEMENTS OR THE PUBLIC RIGHT-OF-WAY BY THE CONTRACTOR WITHOUT SUCH INSPECTION NOR SHALL ANY WORK BE COMMENCED IN DEDICATED EASEMENTS OR RIGHT-OF-WAY WITHOUT WRITTEN AUTHORIZATION BY THE CITY ENGINEER.

GossenLivingston
Architecture
420 South Emporia
Wichita, KS 67202
Tel: (316) 265-9367
Fax: (316) 265-5646
Email: gmlwichita@gl.com

© 2005 Gossen Livingston Associates, Inc.

The drawing and all information herein is the exclusive property of Gossen Livingston Associates, Inc. and is not to be copied or used in any way without the express written consent of Gossen Livingston Associates, Inc. All drawings, specifications, plans, designs and arrangements appearing herein constitute the original and unpublished Work of Gossen Livingston Associates, Inc.

Johnson & Associates, Inc.
100 E. California Ave. - Third Floor
Oklahoma City, OK 73104
(405) 235-8075 FAX (405) 235-8075
Certificate of Authorization #E-1128 EXP. DATE: 12-31-2006

TIMOTHY W. JOHNSON LICENSED 21489 PROFESSIONAL ENGINEER
6-1-05

WATERWALK

GANDER MOUNTAIN

Mark	Date	Description

KEY MAP & GENERAL NOTES

Job No.	ST1
Date 05-27-05	Of
Drawn BC	5
Checked PB	Dwg. of

GANDER MOUNTAIN
FFE=1296.50

MH A-2
N=8890.75
E=9660.70
STA. 10+23.20 – LINE "A"
CONST. 1–STD. 4' I.D. M.H. TYPE P
RE: SHEET ST3
TR=1296.00
FL 24" (E)=1286.73
FL 12" (E)=1288.10
FL 24" (N)=1289.25

LINE "A"

23.2 LF 24" STORM SEWER @ 1.0%

MH A-1
N=8867.55
E=9660.86
STA. 10+00 – LINE "A"
CONST. CITY OF WICHITA
STD. JUNCTION BOX
AROUND EXIST. STORM SEWER
RE: SHEET ST4
TR=1296.00
L=7.0', W=8.0', H=13.0'
FL 24" (IN)=1286.50
FL 60" (EXIST.)=1280.00±

30.75 LF 18" RCP @ 1.0%

LINE "B"

N=8768.78
E=9762.21
STA. 104-30.75 – LINE "B"
CONST. 1–CITY OF WICHITA
STD. DOUBLE DROP INLET
TG=1294.26
FL=1291.26

213.21

10.0 LF 24" M.H. TO GRADE
TR=1296.28

N=8760.01
E=9782.36
STA. 10+00 – LINE "B"
CONST. CITY OF WICHITA
STD. JUNCTION BOX
AROUND EXIST. STORM SEWER
RE: SHEET ST4
TR=1295.82
L=8.0', W=6.5', H=11.5'
FL 18" (IN)=1290.87
FL 42" (EXIST.)=1281.70±

MH B-1

N=8777.34
E=9675.37
STA. 13+17.04
CL WICHITA ST.

PLAN:
SCALE: 1"=20'

PROFILE:
SCALE: 1"=20' (HORIZ.)
1"=2' (VERT.)

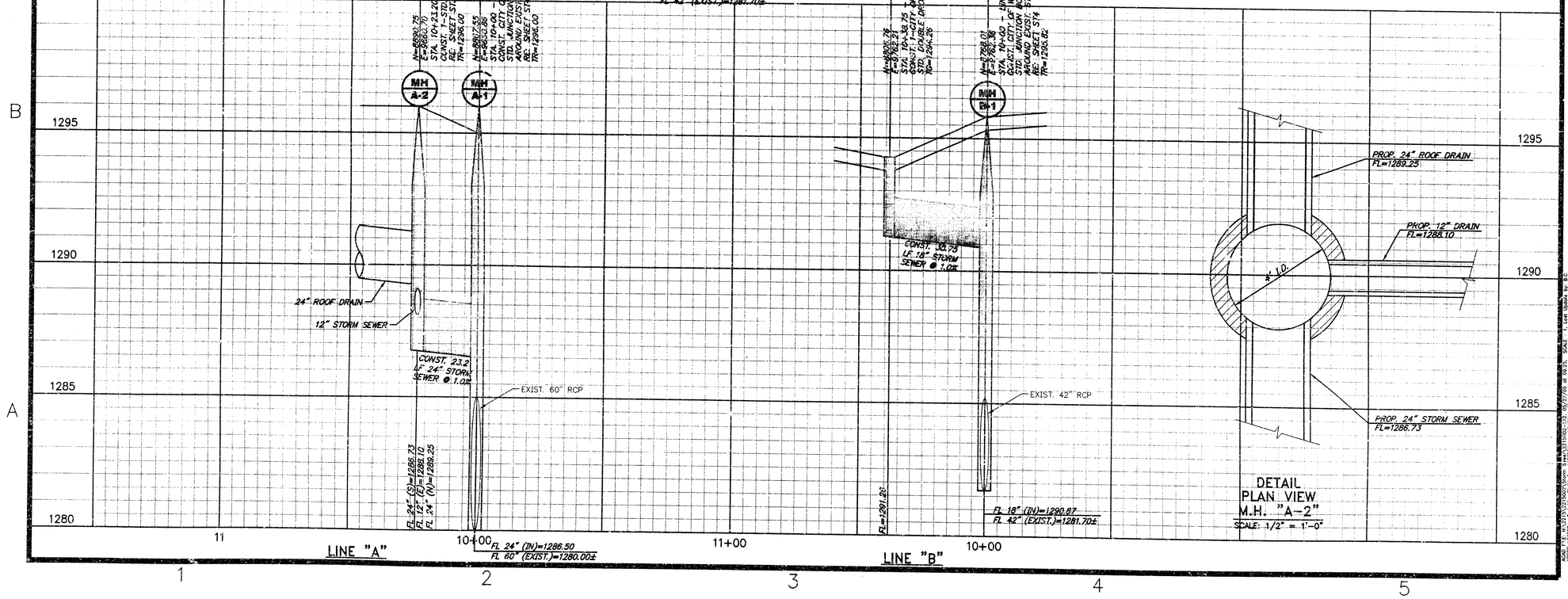

DETAIL
PLAN VIEW
M.H. "A–2"
SCALE: 1/2" = 1'–0"

GossenLivingston
Architecture
420 South Emporia
Wichita, KS 67202
Tel: (316) 265-9367
Fax: (316) 265-5646
Email: architects@gol.com

Johnson & Associates, Inc.
100 E. California Ave. - Third Floor
Oklahoma City, OK 73104
(405) 235-8075 FAX (405) 235-8078
Certificate of Authorization #E-1128 EXP. DATE: 12-31-2004
· ENGINEERS · SURVEYORS · PLANNERS ·

© 2004 Gossen Livingston Associates, Inc.

The drawing and all information herein is the exclusive property of Gossen Livingston Associates, Inc. and is not to be copied or used in any way without the express written consent of Gossen Livingston Associates, Inc. All drawings, specifications, ideas, designs and arrangements appearing herein constitute the original and unpublished Work of:

Gossen Livingston Associates, Inc.

WICHITA WATERWALK

GANDER MOUNTAIN

Mark	Date:	Description
	5/27/05	CITY REVIEW

STORM SEWER
PLAN & PROFILE

Job No.	
Date	05-27-05
Drawn	BC
Checked	PB

ST2
of
5
Dwg. of

ACAD 15.6 win (120USA).dwg, 5/27/2005 10:57:17 AM, 1:1, 1=1, 1:1, 1=1, 1:1, 1=1

SEWER APPURTENANCES DETAILS

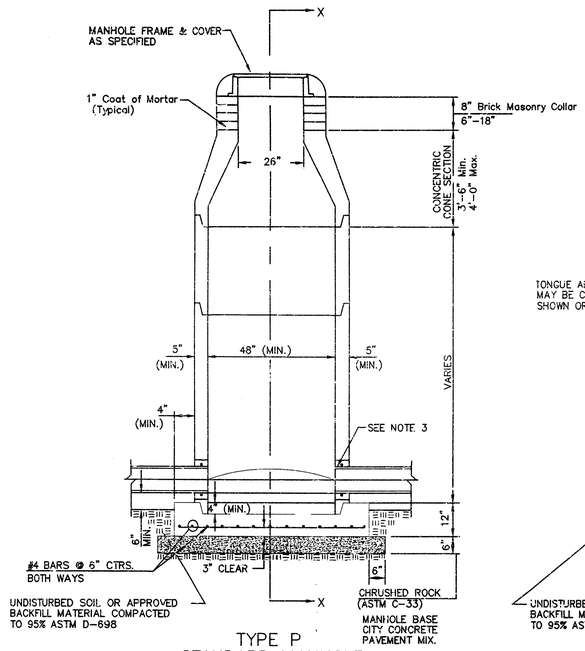

TYPE P
STANDARD MANHOLE

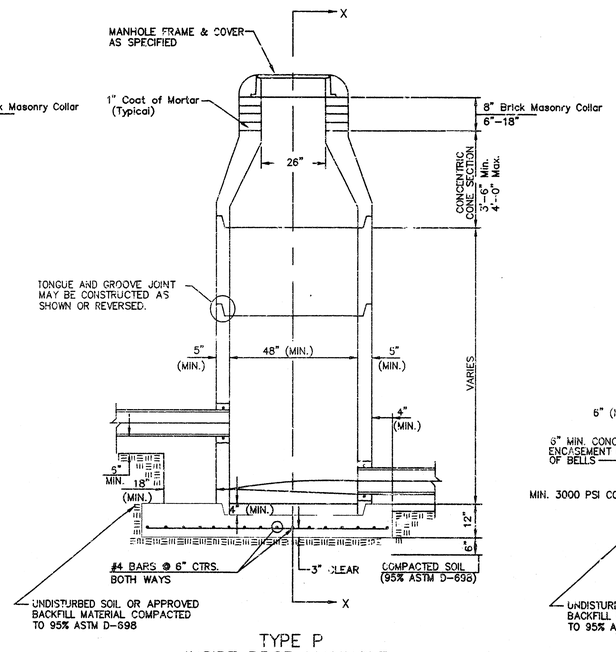

TYPE P
INSIDE DROP MANHOLE

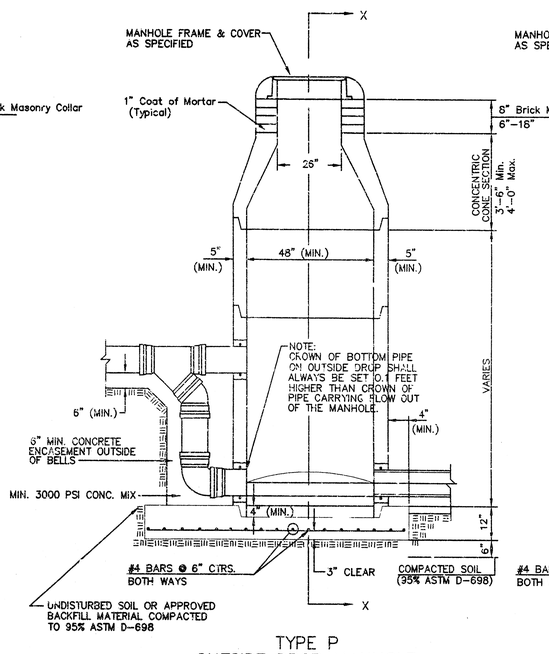

TYPE P
OUTSIDE DROP MANHOLE

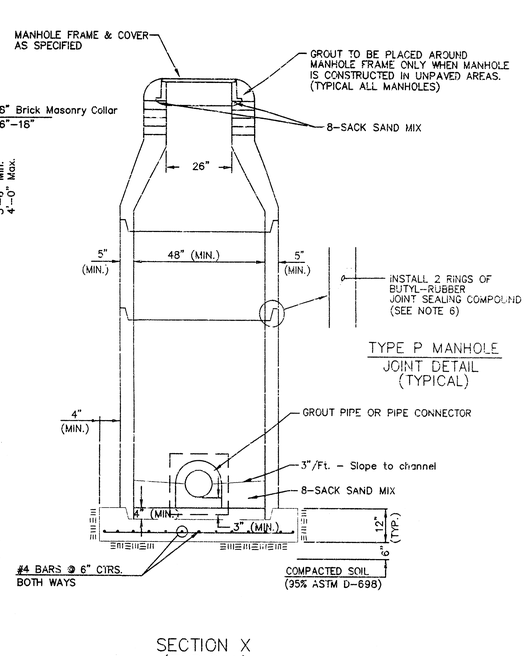

SECTION X
(TYPICAL)

GENERAL NOTES

PRECAST MANHOLE NOTES

1. ALL PRECAST CONCRETE MANHOLE SECTIONS SHALL CONFORM TO THE LATEST REVISIONS OF A.S.T.M. C478 AS MODIFIED BY THE SPECIFICATIONS.
2. NON-SHRINK GROUT SHALL BE NON-METALLIC TYPE.
3. APPROVED FLEXIBLE WATERSTOP GASKETS SHALL BE INSTALLED TO JOIN THE SEWER TO THE MANHOLE WALL WHEN A.B.S. COMPOSITE PIPE OR P.V.C. PIPE IS USED. FOR OTHER TYPES OF PIPE THE SEWER SHALL BE GROUTED IN PLACE WITH NON-SHRINK GROUT. THE SEWER PIPE SHALL BE SUPPORTED WITH CONCRETE ENCASEMENT A MINIMUM OF 3 FEET FROM THE MANHOLE WALL AND TO THE FIRST JOINT FOR V.C.P. SUCH THAT THE JOINT REMAINS FLEXIBLE.
4. ALL INSIDE SURFACES OF THE CONCRETE MANHOLE WHICH WOULD BE EXPOSED TO SEWER GAS SHALL BE COATED WITH 2 COATS TNEMEC SERIES 66 HI-BUILD EPOXOLINE, DRY THICKNESS OF 8 MILS (MIN.)
5. EXTERIOR MANHOLE WALLS SHALL BE COATED WITH 1 COAT MOBILARMA 633 BITUMINOUS COATING.
6. JOINT SEALING COMPOUND SHALL BE KENT SEAL NO. 2 OR APPROVED EQUAL.
7. PRECAST MANHOLES SHALL BE SET AT LEAST 4 INCHES INTO THE MANHOLE BASE.
8. TOP OF MANHOLE FLOOR SLAB SHALL BE AT LEAST 3 INCHES BELOW THE FLOW LINE OF THE OUTLET PIPE TO INSURE SUFFICIENT MINIMUM THICKNESS OF SHAPED INVERT.
9. LIFTING HOLES SHALL BE FILLED WITH NON-SHRINK GROUT AND THE INTERIOR SURFACE COATED AS SPECIFIED.
10. MORTAR USED IN MASONRY CONSTRUCTION SHALL CONTAIN 8 SACKS OF CEMENT PER CUBIC YARD. CONCRETE USED IN MANHOLE BASES SHALL CONFORM TO THE REQUIREMENTS OF CONCRETE FOR CONCRETE PAVEMENT CONSTRUCTION AS SPECIFIED IN THE CITY STANDARD PAVING SPECIFICATIONS USING CITY CONCRETE PAVEMENT MIX WITHOUT AIR ENTRAINING ADMIXTURE. MORTAR SHALL BE PLACED AROUND THE MANHOLE RING AS SHOWN ON THE DRAWINGS WHEN MANHOLES ARE CONSTRUCTED IN UNPAVED AREAS. MANHOLES CONSTRUCTED WHERE PIPE SIZES ARE SMALLER THAN 24" SHALL HAVE AN INSIDE DIAMETER OF 4'. MANHOLES CONSTRUCTED WHERE PIPE SIZES ARE 24" OR LARGER SHALL HAVE AN INSIDE DIAMETER OF 5'. COMPLETED MANHOLE SHALL BE WITHOUT LEAKS AND WATER TIGHT.
11. REINFORCING STEEL SHALL BE INSTALLED IN THE MANHOLE BASES AND SHALL CONSIST OF NO. 4 BARS PLACED ON 6" CENTERS IN BOTH DIRECTIONS. THE MANHOLE BASE REINFORCEMENT SHALL BE PLACED AT LEAST 3" ABOVE THE BOTTOM OF THE MANHOLE BASE. ALL COSTS FOR FURNISHING AND INSTALLING REINFORCING STEEL SHALL BE INCLUDED IN THE UNIT PRICE BID FOR THE MANHOLE.
12. OPENINGS SHALL BE CUT INTO THE MANHOLE WALL WHEN OUTSIDE DROPS ARE CONSTRUCTED ON EXISTING MANHOLES. SUCH OPENINGS CUT INTO EXISTING MANHOLES SHALL BE AS SMALL AS PRACTICAL TO FACILITATE INSTALLING AND GROUTING THE NEW PIPE IN PLACE. WATERSTOP GASKETS SHALL BE USED WITH P.V.C. AND A.B.S. COMPOSITE PIPE. THE NEW PIPE SHALL BE GROUTED INTO THE OPENING USING AN APPROVED NONSHRINK GROUT FOR THE FULL MANHOLE WALL THICKNESS. THE EXTERIOR OF THE COMPLETED CONNECTION SHALL BE SEALED WITH AN APPROVED BITUMINOUS COATING SUCH THAT THE CONNECTION WILL BE WATER TIGHT. FLOOR OF MANHOLE SHALL BE MODIFIED TO FORM NEW FLOW CHANNEL FOR THE NEW CONNECTION AS INDICATED BY THE DRAWING. THIS WORK, INCLUDING MODIFICATION OF MANHOLE FLOOR, SHALL BE PAID FOR AT THE UNIT PRICE BID FOR OUTSIDE DROP STACK CONSTRUCTED ON EXISTING MANHOLE.
13. THE FLOORS OF ALL MANHOLES SHALL BE SHAPED WITH FLOW CHANNELS SUCH THAT THE MANHOLES WILL BE SELF CLEANING AND FREE OF AREAS WHERE SOLIDS COULD BE DEPOSITED AS SEWAGE FLOWS THROUGH THE MANHOLE FROM ALL INLET PIPES TO THE OUTLET PIPE. FLOW CHANNELS SHALL BE FORMED TO MATCH THE BOTTOM HALVES OF THE INFLOWING PIPES AND THE OUTFLOWING PIPE AS SHOWN BY THE DRAWINGS EXCEPT FOR INSIDE DROP MANHOLES. FLOW CHANNELS FOR INSIDE DROP MANHOLES SHALL BE CONSTRUCTED AS INDICATED BY THE DRAWING. MANHOLE FLOORS SHALL HAVE SLOPES OF 3 INCHES PER FOOT IN THE AREAS OUTSIDE OF THE FLOW CHANNELS SLOPED TOWARD THE FLOW CHANNELS. PIPES LAID THROUGH MANHOLES SHALL HAVE THE TOP HALF REMOVED TO NEAT LINES FOR THE FULL INSIDE DIAMETER OF THE MANHOLE. MANHOLE FLOORS SHALL THEN BE SHAPED AROUND THE BOTTOM HALF OF THE PIPE WHICH FORMS THE FLOW CHANNEL.
14. PIPES INSTALLED WITHIN THE EXCAVATION MADE FOR THE MANHOLE SHALL BE CRADLED WITH CONCRETE TO THE LIMITS OF THE MANHOLE EXCAVATION. WHEN CLAY PIPE IS USED, THE CRADLE SHALL EXTEND TO THE FIRST JOINT OUTSIDE THE MAHOLE. THE CRADLE SHALL BE TERMINATED AT THE CLAY PIPE JOINT IN A MANNER WHICH WILL MAINTAIN THE FLEXIBILITY OF THE JOINT. COST OF CRADLE WITHIN MANHOLE EXCAVATION OR TO CLAY PIPE JOINTS ADJACENT TO MANHOLE SHALL BE INCLUDED IN THE UNIT PRICE BID FOR THE MANHOLE.
15. MANHOLE COVER CASTINGS AND MANHOLE FRAME CASTINGS SHALL CONFORM TO THE REQUIREMENTS AS INDICATED IN THE STANDARD SPECIFICATIONS AND AS SHOWN IN THE STANDARD DETAIL DRAWING.
16. THE VERTICAL DROP IN INSIDE DROP MANHOLES SHALL NOT EXCEED 2' FOR INFLOWING PIPES SIZED 12" OR SMALLER AND 2' FOR INFLOWING PIPES LARGER THAN 12". THE CROWNS OF INFLOWING PIPES SHALL NEVER BE SET LOWER THAN THE CROWN OF THE OUTFLOWING PIPE.
17. STANDARD MANHOLES AND STANDARD INSIDE DROP MANHOLES SHALL BE BID AS STANDARD MANHOLES FOR THE TYPE AND DIAMETER INDICATED. OUTSIDE DROP MANHOLES SHALL BE BID AS STANDARD OUTSIDE DROP MANHOLES FOR THE TYPE AND DIAMETER INDICATED. ALL MANHOLE DIAMETERS WILL BE 4' UNLESS INDICATED OTHERWISE.
18. A BRICK MASONRY COLLAR SHALL BE INSTALLED BETWEEN THE CAST IRON FRAME AND THE CONCENTRIC CONE. THE COLLAR WILL HAVE 8" WALLS AND A VERTICAL HEIGHT OF 6" MINIMUM AND 18" MAXIMUM. A 1" COAT OF MORTAR WILL BE PLASTERED ON THE OUTSIDE OF THE COLLAR. THE USE OF PRE CAST CONCRETE SPACERS FOR MANHOLE TOP ADJUSTMENT IS ALSO ALLOWED.
19. CHRUSHED ROCK CONFORMING TO ASTM C-33 WITH A GRADATION OF NO. 67 SHALL BE INSTALLED AT THE BASE OF THE MANHOLE TO A DEPTH OF NO LESS THAN 6", AND SHALL EXTEND NO LESS THAN 6" OUTSIDE THE DIAMETER OF THE CONCRETE FLOOR OF THE MANHOLE.

THE CITY OF WICHITA

CITY ENGINEER'S OFFICE
CITY HALL - SEVENTH FLOOR
455 NORTH MAIN STREET
WICHITA, KANSAS 67202
(316) 268-4501
(316) 268-4114 FAX

STANDARD
TYPE 'P'
MANHOLES

M. E. LINDEBAK P.E. - CITY ENGINEER

PROJECT NUMBER	INDEX CODE
XXX-XXXXX	XXXXXX
DATE: MAR 96	SHEET ST3 OF 5

PMH.DWG

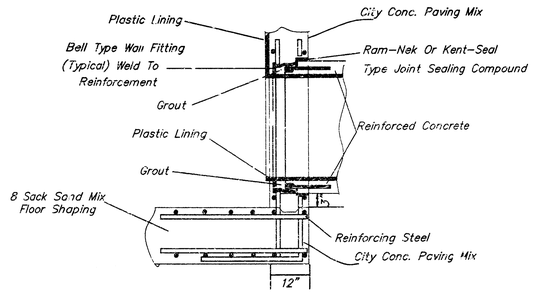

R.C.P. CONNECTION DETAIL

SANITARY SEWER ONLY

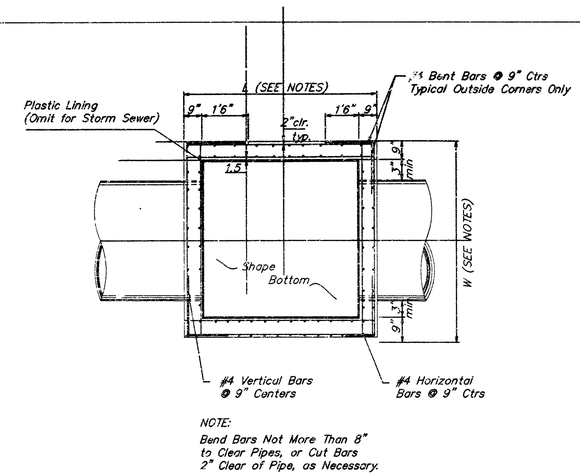

NOTE:
Bend Bars Not More Than 8"
to Clear Pipes, or Cut Bars
2" Clear of Pipe, as Necessary.

TOP VIEW

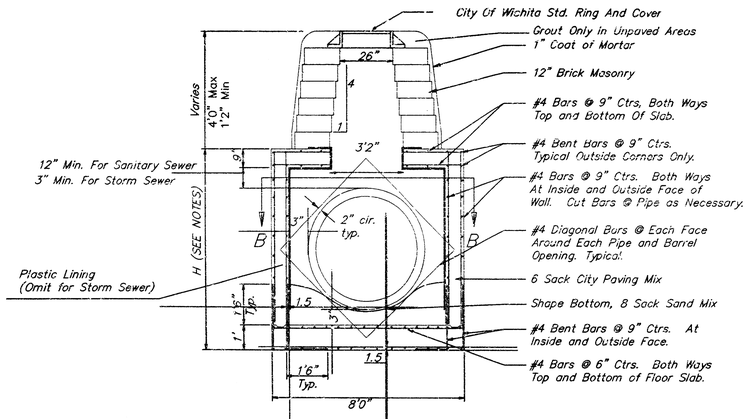

REINFORCED CONCRETE MANHOLE

MANHOLE STACK 2.33' TO 4'0"

GENERAL NOTES:

1. MORTAR USED IN MASONRY CONSTRUCTION SHALL CONTAIN 8 SACKS OF CEMENT PER CUBIC YARD. CONCRETE USED IN MANHOLE WALLS AND BASES SHALL CONFORM TO THE REQUIREMENTS FOR CONCRETE PAVEMENT CONSTRUCTION AS SPECIFIED IN THE CITY STANDARD PAVING SPECIFICATIONS, USING CITY CONCRETE PAVEMENT MIX WITHOUT AIR ENTRAINING ADMIXTURE. MORTAR SHALL BE PLACED AROUND THE MANHOLE RING AS SHOWN ON THE DRAWINGS WHEN MANHOLES ARE CONSTRUCTED IN UNPAVED AREAS. COMPLETED MANHOLE SHALL BE WITHOUT LEAKS AND WATER TIGHT.

2. THE FLOORS OF ALL MANHOLES SHALL BE SHAPED WITH FLOW CHANNELS SUCH THAT THE MANHOLES WILL BE SELF CLEANING. USING 8-SACK SAND MIX CONCRETE. FLOW CHANNELS SHALL BE FORMED TO MATCH THE BOTTOM HALVES OF THE INFLOWING PIPES AND THE OUTFLOWING PIPE. MANHOLE FLOORS SHALL HAVE SLOPES OF 3 INCHES PER FOOT IN THE AREAS OUTSIDE OF THE FLOW CHANNELS SLOPED TOWARD THE FLOW CHANNELS.

3. MANHOLE COVER CASTINGS AND MANHOLE FRAME CASTINGS SHALL CONFORM TO THE RE-QUIREMENTS AS INDICATED IN THE STANDARD SPECIFICATIONS AND AS SHOWN IN THE STANDARD DETAIL DRAWING.

4. THE ENDS OF ALL PIPES IN MANHOLES SHALL BE CUT OFF FLUSH WITH THE INSIDE FACE OF MANHOLE WALL.

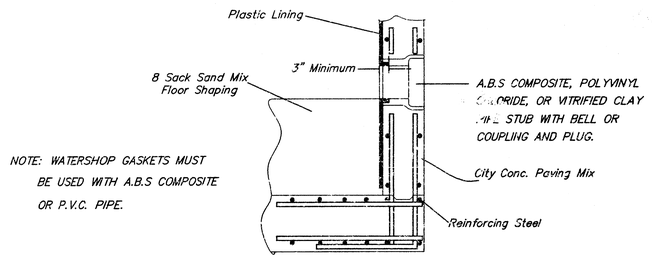

NOTE: WATERSHOP GASKETS MUST BE USED WITH A.B.S COMPOSITE OR P.V.C. PIPE.

PIPE STUB DETAIL

SANITARY SEWER ONLY

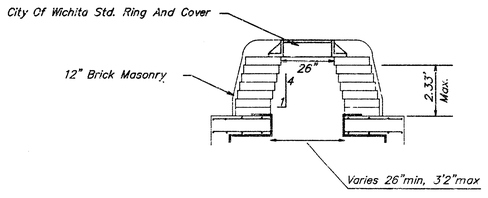

REINFORCED CONCRETE MANHOLE

MANHOLE STACK LESS THAN 2.33'

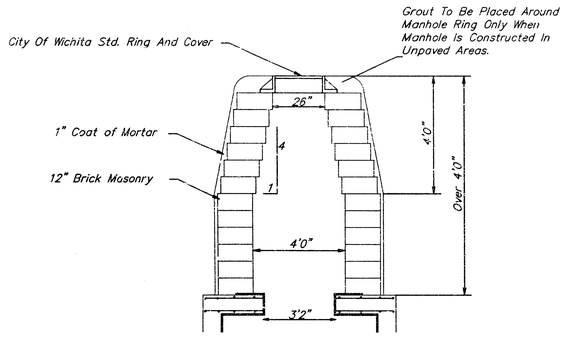

REINFORCED CONCRETE MANHOLE

MANHOLE STACK OVER 4'0"

THE CITY OF WICHITA

CITY ENGINEER'S OFFICE
CITY HALL - SEVENTH FLOOR
455 NORTH MAIN STREET
WICHITA, KANSAS 67202
(316) 268-4351
(316) 268-4114 FAX

REINFORCED CONCRETE MANHOLE

M. E. LINDEBAK P.E. - CITY ENGINEER

PROJECT NUMBER	INDEX CODE
XXX-XXXXX	XXXXXX
DATE: APRIL 99	SHEET ST4 OF 5

SSDTAIL.DWG

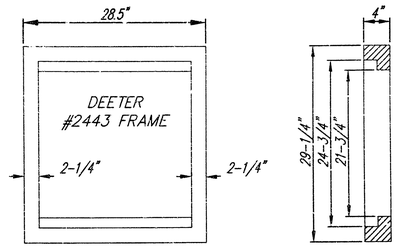

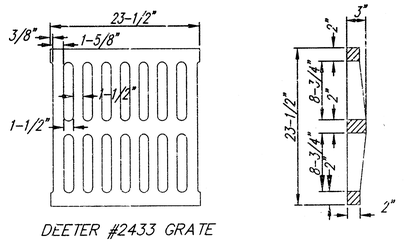

DEETER #2433 GRATE

24" x 24" Frame and Grate Detail

NOTE: Grates shall be imprinted on the top surface with "CITY OF WICHITA" using letters at least 1" in height. Other marking methods may be approved by the engineer.

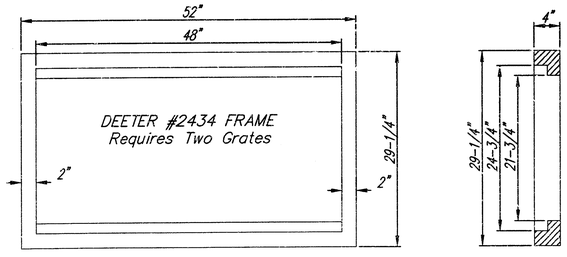

Double 24" x 24" Frame Detail

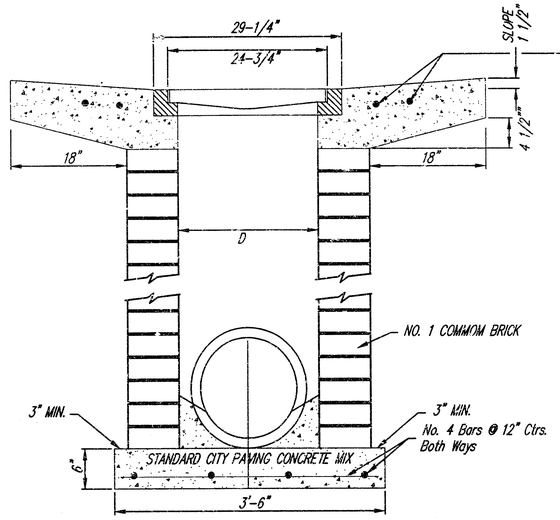

Note: Concrete apron shall be constructed around the inlet when inlet is located in an unpaved area. Where the inlet is adjacent to pavement, the pavement thickness shall be tapered to the inlet in 18 inches as indicated on the detail.

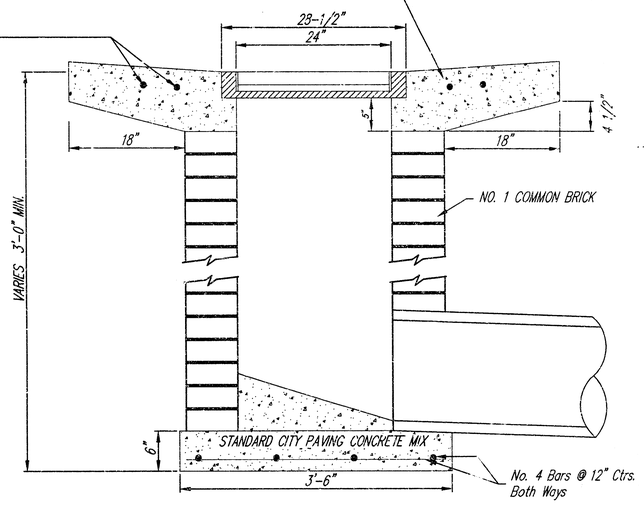

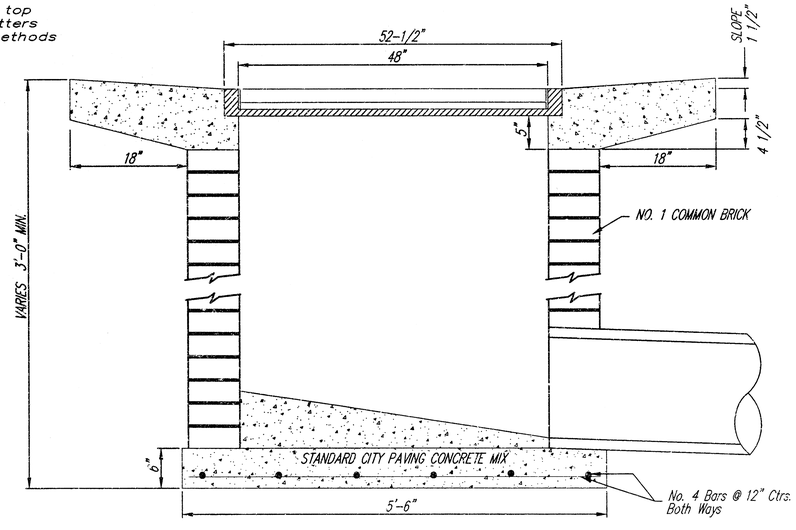

REV. 8-20-01

THE CITY OF WICHITA

CITY ENGINEER'S OFFICE
CITY HALL – SEVENTH FLOOR
455 NORTH MAIN STREET
WICHITA, KANSAS 67202
(316) 268-4501
(316) 268-4114 FAX

DROP INLET
SINGLE & DOUBLE

M. E. LINDEBAK P.E. – CITY ENGINEER

PROJECT NUMBER	INDEX CODE
XXX-XXXXX	XXXXXX
DATE MAR 96	SHEET ST5 OF 5

DROP INLET SINGLE & DOUBLE.DWG

60 60 70 91