# STORM WATER SEWER TRUNK LINE
# DRAINAGE IMPROVEMENTS

TO SERVE

## NEW MARKET SQUARE- PHASE 2

CITY OF WICHITA PRIVATE PROJECT NO. 1582 PPS (607861)

## CITY OF WICHITA, KANSAS

JAMES L. ARMOUR, P.E.-CITY ENGINEER

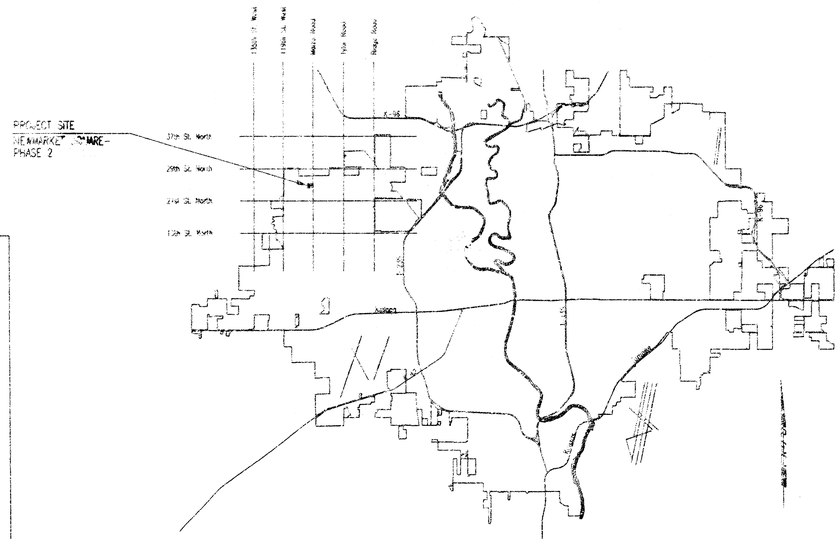


LOCATION MAP

INDEX OF SHEETS


| | |
|---|---|
| 1 | TITLE SHEET |
| 2 | PLAN-PROFILE WATER MAIN |
| 3 | PLAN-PROFILE STORM SEWER |
| 4 | GROUP AND END INLET DETAILS |
| 5 | TYPE "C" INLET DETAILS |
| 6 | TYPE "D" MANHOLE DETAILS |
| 7 | MANHOLE FRAME AND COVER DETAILS |
| 7-9 | EROSION CONTROL DETAILS |
| 10 | PLAT |


GENERAL NOTES

1. EXISTING UTILITIES AND THEIR LOCATIONS AS SHOWN ON THE PLANS REPRESENT THE BEST INFORMATION AVAILABLE TO THE ENGINEER. SUCH INFORMATION HAS BEEN OBTAINED FROM THE VARIOUS UTILITY COMPANIES OR IS FROM FIELD COMPANY RECORD DRAWINGS OR COMPANY PROVIDED FILE LOCATIONS. IT IS POSSIBLE THAT OTHER UTILITIES MAY BE ENCOUNTERED WHICH ARE NOT SHOWN ON THE PLANS. THE CONTRACTOR IS REQUIRED TO NOTIFY ALL UTILITY COMPANIES OF HIS CONSTRUCTION SCHEDULE AND TO WORK AROUND EXISTING UTILITIES WHICH DO NOT CONFLICT WITH PROPOSED CONSTRUCTION.

2. PUBLIC FROM THE REMOVAL OF MISCELLANEOUS STRUCTURES SHALL BE DISPOSED OF ON SITES TO BE PROVIDED BY THE CONTRACTOR AND APPROVED AS NOTED BELOW.

   ALL DISPOSAL SITES MUST BE APPROVED BY THE KANSAS DEPARTMENT OF HEALTH AND ENVIRONMENT. ANY MATERIAL EITHER STOCKPILED OR DISPOSED OF IN A FLOOD PLAIN WOULD REQUIRE A KANSAS STATE BOARD OF AGRICULTURE PERMIT. ANY MATERIAL DUMPED IN WATERS OF THE UNITED STATES OR WETLANDS IS SUBJECT TO U.S. CORPS OF ENGINEERS PERMITTING REGULATIONS. ANY MATERIAL BURIED OR STOCKPILED BEYOND APPROVED CONSTRUCTION LIMITS WOULD REQUIRE ADDITIONAL ARCHEOLOGICAL INVESTIGATIONS UNLESS BURIED IN A PREVIOUSLY APPROVED BURROW LOCATION.

3. CONTRACTOR SHALL SATISFY HIMSELF OF SURFACE AND SUBSURFACE CONDITIONS PRIOR TO BIDDING.

4. AT LEAST 72 HOURS PRIOR TO BEGINNING EXCAVATION FACILITATING INSPECTION AND MARKING OF UTILITY LINES, THE CONTRACTOR SHALL CONTACT THE KANSAS ONE-CALL SYSTEM A UTILITY LOCATION SERVICE AT (316) 687-2470 TO REQUEST THE LOCAL UTILITY COMPANIES TO MARK ANY EXISTING LINES WITHIN THE PROJECT AREA.

5. THE CONTRACTOR SHALL BE RESPONSIBLE FOR PRESERVING PROPERTY IRONS. THE CONTRACTOR WILL BE REQUIRED TO RE-ESTABLISH ANY PROPERTY IRONS WHICH ARE DAMAGED OR DESTROYED BY HIS CONSTRUCTION OPERATIONS. SUCH IRONS SHALL BE RE-ESTABLISHED BY A LICENSED LAND SURVEYOR IN ACCORDANCE WITH STATE LAWS.

6. THE WATER DEPARTMENT SHALL FIELD LOCATE WATER VALVES ONE TIME DURING CONSTRUCTION WHEN REQUESTED BY THE CONTRACTOR. IT SHALL BE THE CONTRACTOR'S RESPONSIBILITY TO PRESERVE SUCH FIELD LOCATIONS DURING THE CONSTRUCTION PROCESS. WATER VALVES, WATER VALVE BOXES OR FIRE HYDRANTS DAMAGED DURING CONSTRUCTION SHALL BE REPAIRED BY THE CONTRACTOR AT HIS OWN EXPENSE.

7. THE CONTRACTOR SHALL APPLY PERMANENT SEED AND BI COMPLEX BLANKET TO ALL UNPAVED AREAS DISTURBED BY HIS CONSTRUCTION OPERATIONS IN ACCORDANCE WITH THE STANDARD SPECIFICATIONS. SEED SHALL BE A "RESCUE BLEND WELL SUITED TO SOUTH CENTRAL KANSAS APPLIED AT THE RATE OF 4 LBS PER 1,000 SQUARE FEET. THIS WORK SHALL BE SUBSIDIARY TO "SITE CLEARING AND RESTORATION".

8. THE MANHOLE COVERS TO BE USED ON THIS PROJECT ARE TO BE STORMWATER SPECIFIC AND SHOULD INCLUDE THE FOLLOWING STATEMENT. "NO DUMPING, DRAINS TO RIVER".

9. AT LEAST 48 HOURS PRIOR TO BEGINNING CONSTRUCTION, THE CONTRACTOR SHALL CONTACT BILL PERKINS AT THE CITY OF WICHITA AT (316) 268-4555 TO COORDINATE THE POSSIBLE WATERLINE RELOCATION AT STATION 17+26.71.

10. ALL IRRIGATION, LANDSCAPING, AND FENCING DISTURBED DURING CONSTRUCTION SHALL BE REMOVED AND REPLACED/REPLACED IN KIND. THE CONTRACTOR SHALL PROVIDE A MINIMUM ADVANCE NOTICE OF FORTY-EIGHT (48) HOURS TO THE AFFECTED PROPERTY OWNERS PRIOR TO BEGINNING CONSTRUCTION. THIS WORK SHALL BE CONSIDERED SUBSIDIARY TO "SITE CLEARING AND RESTORATION".

11. SEQUENCE OF PUMP OPERATIONS:
    CONTRACTOR SHALL PROVIDE A NEW FLOAT CONTROL SYSTEM FOR THE EXISTING PUMP TO ACHIEVE THE FOLLOWING OPERATIONS:
    ELEV.= 138.00 LOW-WATER PUMP ON/OFF
    UNDER THESE OPERATIONS AND LOW-WATER CONDITIONS, THE PUMP WILL BE TRIGGERED TO TURN ON AT ELEV.= 138.00 AND CONTINUE TO REMOVE WATER FROM THE RESERVOIR UNTIL STATIC WATER ELEVATION IS ATTAINED AT ELEV.= 138.00.

APPROVED AS NOTED
By CITY ENGINEER OF WICHITA

Sanitary Sewers _____

Storm Sewers JCK 9/20/05

Driveway Approaches _____

Paving _____

NOTE TO CONTRACTOR

INSPECTION AND TESTING FOR THIS PROJECT IS TO BE PROVIDED BY A LICENSED CONSULTING ENGINEERING FIRM CONTRACTED BY THE OWNER/DEVELOPER. SAID INSPECTION TO BE IN ACCORDANCE WITH THE CITY OF WICHITA STANDARD CONSTRUCTION ENGINEERING PRACTICES AND CERTIFIED BY A LICENSED PROFESSIONAL ENGINEER. NO WORK SHALL BE PERFORMED IN DEDICATED EASEMENTS OR PUBLIC RIGHT-OF-WAY BY THE CONTRACTOR UNTIL SUCH INSPECTION IS ARRANGED FOR AND REQUIRED BONDS HAVE BEEN SUBMITTED TO AND APPROVED BY THE CITY. NOR SHALL ANY WORK BE COMMENCED IN DEDICATED EASEMENTS OR PUBLIC RIGHT-OF-WAY WITHOUT WRITTEN AUTHORIZATION BY THE CITY ENGINEER. IMPROVEMENTS PERFORMED UNDER THIS PROJECT SHALL NOT BE ACCEPTED BY THE CITY UNTIL ALL APPLICABLE DOCUMENTATION HAS BEEN SUBMITTED TO THE CITY ENGINEER. THIS MAY INCLUDE: RECORD DRAWINGS, INSPECTION LOGS, TEST DOCUMENTATION, TV TAPES, AND A CERTIFICATE OF COMPLETION. THE ABOVE SHALL BE PERFORMED BY THE CONSULTING FIRM CONTRACTED TO INSPECT THIS PROJECT.

## SEPTEMBER 2005

PLANS PREPARED BY

## PROFESSIONAL ENGINEERING CONSULTANTS, P.A.

ENGINEERS

WICHITA, KANSAS

BRIAN D. BOUTWELL LICENSED 10889 KANSAS PROFESSIONAL ENGINEER 9/19/05

AS-BUILT DEC. 20, 2005

DGNR: BLB OPER: BJS SCALE: 1=1.00
N:\2004\04090\Phase 2 SWS Trunk\04090-C-SWS-TRUNK-TITLE 09-19-2005 11:03:22 am

Sta. 8+94.8 SWS Line No. 1
Begin 48" RCP Construction
Install 105.2 L.F. 48" RCP (NE)
(Including End Section)
(102)

Sta. 10+00.0 SWS Line No. 1
Const. Std. Type "P" Manhole
Dia.=6'-0"
Top Elev.=154.0
Install 187.7 L.F. 42" RCP (E)
See Sheet No. 5.
(101)

Sta. 11+87.7 SWS Line No. 1
Const. Std. Type "P" Manhole
Dia.=5'-0"
Top Elev.=164.0
Install 309.2 L.F. 42" RCP (NE)
See Sheet No. 5.
(122)

Sta. 14+96.9 SWS Line No. 1
Const. Std. Type "P" Manhole
Dia.=5'-0"
Top Elev.=165.0
Install 280.7 L.F. 36" RCP (NE)
See Sheet No. 5.
(103)

Relocate 8" Waterline as Needed*

Sta. 17+77.5 SWS Line No. 1
Const. Std. Type "P" Manhole
Dia.=5'-0"
Top Elev.=165.5
Install 184.0 L.F. 36" RCP (NE)
See Sheet No. 5.
(104)

Sta. 19+61.6 SWS Line No. 1
Const. Area Inlet
Top Elev.=162.5
Install 93.9 L.F. 18" RCP (SE)
Remove Exist. 24" End Section
See Sheet No. 3.
(105)

Sta. 20+55.5 SWS Line No. 1
Const. Type "C" Inlet
L=3'-0", W=3'-0"
Top Elev.=162.50
See Sheet No. 4.
(106)

Install 75 S.Y.
Light Stone Riprap
See Sheet No. 3.

| COORDINATE LIST | | |
|---|---|---|
| POINT | NORTH | EAST |
| 101 | 14,076.2438 | 4,774,139.2 |
| 102 | 14,076.2438 | 4,774,139.2 |
| 103 | 14,241.2553 | 4,774,139.2 |
| 104 | 14,241.2553 | 4,774,139.2 |
| 105 | 14,241.2553 | 4,774,139.2 |
| 106 | 14,241.2553 | 4,774,139.2 |
| 107 | 14,241.2553 | 4,774,139.2 |
| 108 | 14,241.2553 | 4,774,139.2 |
| 109 | 14,241.2553 | 4,774,139.2 |
| 110 | 14,241.2553 | 4,774,139.2 |

(113) = COORDINATE POINT NO.

SCALE: 1"=40'

See Note (4)

CAUTION !!!
Existing 21" San. Sewer
City of Wichita

CAUTION !!!
Existing 8" Water
City of Wichita

Proposed Pavement

Note (4): Construct Suitable Cofferdam and Dewater as Necessary to Construct SWS Line No. 1. Cofferdam may be of Compacted Earth Material or Sheet Piles. Upon Completion of Drainage Improvements, Remove Cofferdam and Restore Pond Banks. This work shall be Subsidiary to 48" RCP.

30" STUB TO SE
Proposed Pavement

Prop. Contour (Typ.)

Remove 18" CIP
This work is to be Subsidiary to "Site Clearing & Restoration."

* PRIOR TO BEGINNING CONSTRUCTION, THE CONTRACTOR SHALL EXCAVATE THE EXISTING 8" WATERLINE AT STATION 17+26.7' TO VERIFY HORIZONTAL AND VERTICAL ALIGNMENT. THE CONTRACTOR SHALL REPORT HIS FINDINGS TO THE ENGINEER SO THAT ANY NECESSARY PLAN MODIFICATIONS MAY BE MADE. ANY ADDITIONAL LABOR OR MATERIALS NECESSARY TO RELOCATE THE WATERLINE SHALL BE BID AS ALTERNATE "WATERLINE RELOCATION."

PLAN | CHECKED | DWN

PROFILE | CHECKED | DWN

DGN: RGY DFTR: SAW SCALE: 1"=40.00
Q:\2004\04009\Phase 2 SWS Trunk\04009 C-SWS-KEYRUNK-SHT1 11-04-2005 01:47:24 pm

Sta. 8+94.8 SWS Line No. 1 Begin 48" RCP Construction
Existing 8" Water Top of Pipe=1161.16 (Design)
Sta. 10+00.0 SWS Line No. 1 Const. Std. Type "P" Manhole Top Elev.=164.32
Sta. 11+87.7 SWS Line No. 1 Const. Std. Type "P" Manhole Top Elev.=165.82
Sta. 14+96.9 SWS Line No. 1 Const. Std. Type "P" Manhole Top Elev.=165.0
Existing 8" Water Top of Pipe=1150.77 (Design)
Sta. 17+77.5 SWS Line No. 1 Const. Std. Type "P" Manhole Top Elev.=165.5
Sta. 19+61.6 SWS Line No. 1 Const. Area Inlet Top Elev.=162.5
Sta. 20+55.5 SWS Line No. 1 Const. Type "C" Inlet Top Elev.=162.50

Static Pool= 158.0
Riprap
End Section
Pond Floor =148.00 (Design)
Existing Ground
Proposed Ground
Static Pool= 162.50
Pond Floor =153.0

105.2 L.F. 48" RCP @ +1.72%
187.7 L.F. 42" RCP @ +0.10%
309.2 L.F. 42" RCP @ +0.10%
280.7 L.F. 36" RCP @ +0.12%
184.0 L.F. 36" RCP @ +0.20%
93.9 L.F. 18" RCP @ +0.30%

E Out=152.40
E Out=155.21 E In=154.12
E Out=155.96 E In=155.87
E Out=156.27 E In=156.09
E Out=155.71 E In=156.47
E Out=156.97 E In=157.03
E Out=157.66 E In=157.55

157.14
E In=157.01
24" RCP (N)
FL IN=157.21
20" R.C.P.(SE)

AS-BUILT
DEC. 20, 2005

9 10+00 11 12 13 14 15+00 16 17 18 19 20+00 21

175 170 165 160 155 150 145 140 135

NEBRASKA | Surface Water Design Manual | Chapter 2 | STORM WATER SEWER TRUNK LINE

SWS LINE NO. 1
REVISED 11-04-05
(DALE E. ALBRECHT, P.E. #12977)
CITY OF WICHITA, KANSAS

Professional Engineering Consultants, P.A.
9111 W. Harry, Suite 200, Wichita, KS 67209
316.722.2000 FAX 316.722.2222

Designed By BJB, BLB | Job No. 35 04009
Drawn By BJS | Date January 2005

Sheet 2 of 10

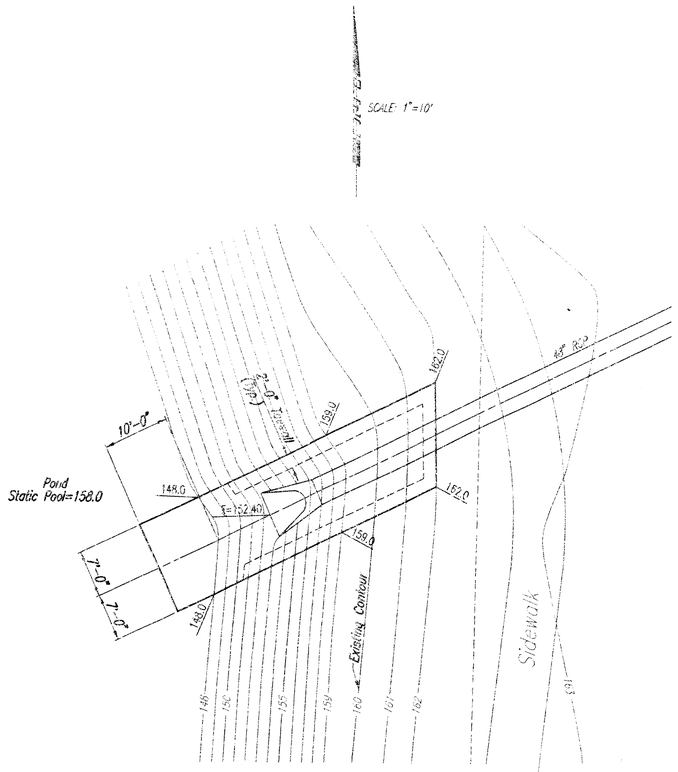


RIPRAP PLAN

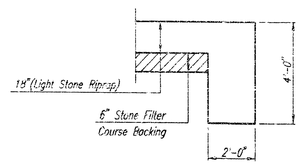


TYPICAL SECTION THRU TOEWALL
NO SCALE

NOTES

1. ALL RIPRAP FOR THIS PROJECT SHALL BE NATURAL STONE. NEITHER BROKEN CONCRETE, FABRIC ENVELOPE, NOR PREMIXED DRY PACKAGED CONCRETE BAG ALTERNATES WILL BE ALLOWED.
2. TOEWALLS SHALL BE INSTALLED ALONG ALL EDGES OF STONE RIPRAP.
3. GROUTING OF THE SURFACE OF THE RIPRAP SHALL NOT BE PERFORMED. GROUTING OF THE TOEWALLS SHALL BE PERFORMED PER CITY SPECIFICATIONS.
4. DEPTH OF TOEWALL SHALL NOT BE DEEPER THAN THE POND FLOOR (POND ELEV=148.0)

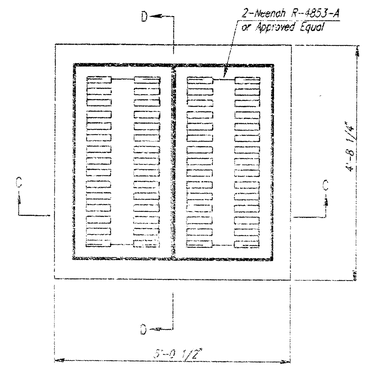


PLAN

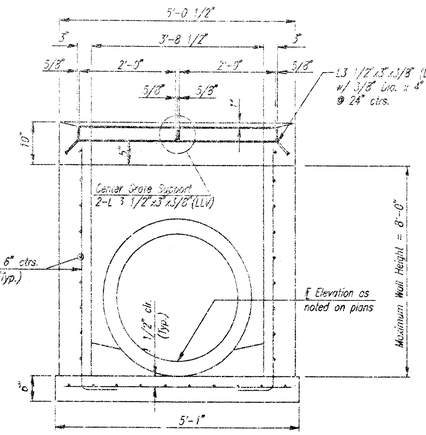


SECTION C-C

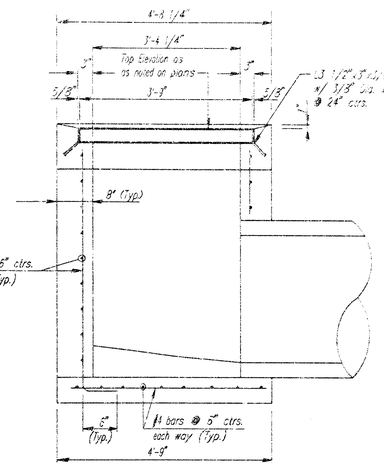


SECTION D-D

SPECIAL AREA INLET

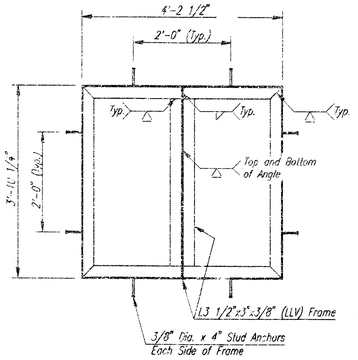


FRAME DETAIL
(For Special Area Inlet)

Note:
Frame to mate with 2 Neenah R-4853-A Grates or approved equal.

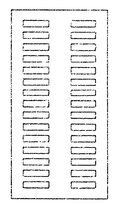

GRATE DETAIL
(Wt.=520 lbs.)
(2 Required)

Note:
Grate shall be Neenah R-4853-A or approved equal.

GENERAL NOTES

CONCRETE SHALL HAVE A MINIMUM 28 DAY COMPRESSIVE STRENGTH OF 4000 PSI
ALL PIPES SHALL BE FLUSH CUT PRIOR TO BEING CAST INTO WALLS

REINFORCING STEEL SHALL BE GRADE 60, A.S.T.M. A615.
ALL DIMENSIONS RELATIVE TO PLACEMENT OF REINFORCING ARE TO THE CENTERLINE OF BARS UNLESS OTHERWISE NOTED.

INLET CASTINGS SHALL BE MANUFACTURED USING DUCTILE IRON CONFORMING TO AASTM A536-80 GRADE 65-45-12. DIMENSIONS AND WEIGHTS SHOWN ON THE DETAILED DRAWINGS SHALL BE CONSIDERED AS MINIMUM REQUIREMENTS AND ANY DEVIATIONS FROM THE DIMENSIONS SHOWN MUST BE SPECIFICALLY APPROVED. THE FINISHED CASTINGS SHALL BE OF UNIFORM QUALITY, FREE FROM SCOWHOLES, POROSITY, HARD SPOTS, SHRINKAGE DISTORTIONS OR OTHER DEFECTS

INLET FLOOR SHALL BE SHAPED WITH UNREINFORCED CONCRETE (3 EACH SHAPE MIX) TO CREATE FLOW CHANNELS AND TO INCREASE HYDRAULIC EFFICIENCY SUCH THAT THE INLET WILL BE SELF CLEANING BETWEEN ALL INLET AND/OR OUTLET PIPES.

PIPES ENTERING EXISTING STRUCTURE SHALL BE CENTERED ON INSIDE FACE OF WALL.

ALL EXPOSED STRUCTURAL STEEL SHALL BE PAINTED WITH A 1 COAT OF ZINC CHROMATE LINC PRIMER AND THEN WITH A 1 UP COAT OF OR A TWO COAT OF URETHANE LINC. EACH COAT TO BE 3 TO 4 MILS. SHOP DRAWINGS SHALL BE USED TO FABRICATE THE SPECIAL AREA INLET FRAME SHALL COMPLY WITH A.S.T.M. A36. WELDING SHALL CONFORM TO THE STRUCTURAL WELDING CODE AWS D1.1-98

| No. | Revision | By | Date |
|---|---|---|---|
| | | | |

NEW MARKET SQUARE - PHASE 2
STORM WATER SEWER - TRUNK LINE

# RIPRAP & AREA INLET DETAILS

JAMES L. ARMOUR, P.E.- CITY ENGINEER
CITY OF WICHITA PRIVATE PROJECT NO. 1582 PPS (607861)


Professional Engineering Consultants, P.A.
303 S. TOPEKA • WICHITA, KANSAS 67202
316-262-2691 • FAX 316-262-3003


| | | | |
|---|---|---|---|
| Designed by BER, BLB | Job No. 35-04090 | Sht. 3 of 10 |
| Drawn by BMM, BJS | Date July 2005 | |

BRIAND BOUTWELL LICENSED 10889 PROFESSIONAL ENGINEER 7-19-05

DSNR: BLB OPER: BJS SCALE: 1=10.00
G:\2005\04090\Phase 2 SWS Trunk\04090-C-SWS-TRUNK-PECANINLET 09-19-2005 10:36:17 am

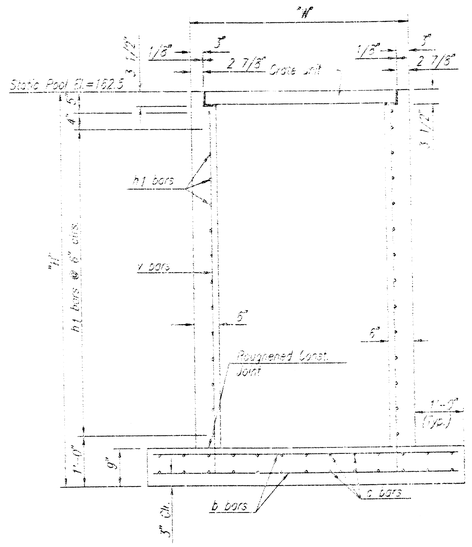


SECTION A-A

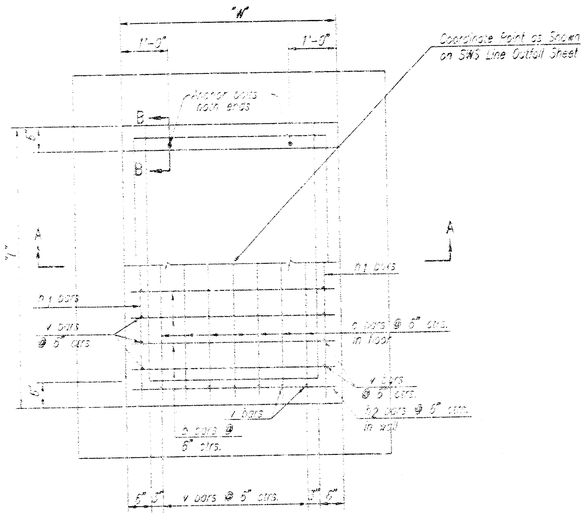


PLAN/SECTION

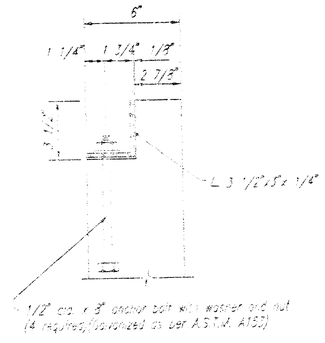


SECTION B-B

Note: Anchor bolts are subsidiary to the bid item "Inlet Type C".

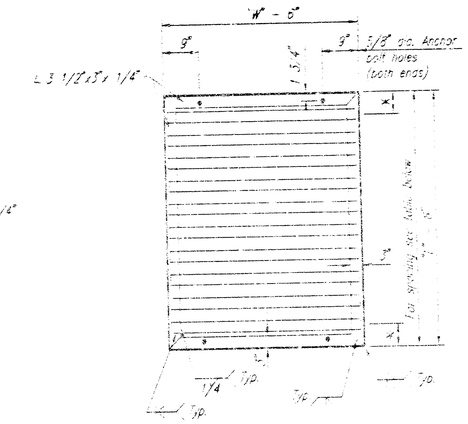


GRATE UNIT DETAILS

## APEA INLET

*See SWS Line Outfall Sheet for Inlet orientation.*

BILL OF MATERIALS

| "L" 3'-0" | "W" x 3'-0" | "H" x 10'-9" | (106) |
|---|---|---|---|
| bar | No. | Size | Length |
| y | 15 | #4 | 10'-1" |
| c | 20 | #4 | 4'-9" |
| b | 20 | #4 | 4'-3" |
| h1 | 40 | #4 | 2'-9" |
| h2 | 40 | #4 | 2'-9" |
| | | | |
| | | | |
| Class "A" Conc. | | 2.52 | Cu.Yd. |
| Reinf. steel | | 322 | Lbs. |
| Struct. steel | | 91 | Lbs. |

*Quantities are for information only.*

PIPE DIMENSIONS AND SPACING (SCHEDULE 40)

| Location | L x W | No. of Pipes | Dia. x Length x Spacing | ± |
|---|---|---|---|---|
| (106) | 3'-0"x3'-0" | 3 | 2 1/2"ø x 2'-5 1/4" pipes @ 3" ctrs. | 6" |
| | | | | |
| | | | | |
| | | | | |
| | | | | |

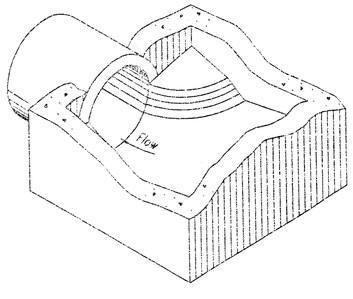


*Floor of inlet or manhole shall be shaped as shown to increase hydraulic efficiency.*

ISOMETRIC VIEW

## GENERAL NOTES

*Concrete shall be as per City of Wichita Standard Specifications for Concrete Paving Mix. Except that it shall have a minimum 28 day compressive strength of 4,000 p.s.i. All Pipes shall be flush cut prior to being cast into the inlet.*

*All dimensions relative to Reinforcing Steel are to centerline of bar unless otherwise noted. All Reinforcing Steel shall conform to A.S.T.M. Designation A615 Grade 60 and shall be Epoxy Coated.*

*All exposed edges shall be finished with an edging tool.*

*All external pipe to inlet joints shall be coated with an asphaltic tar to waterproof the joint interface.*

*Where possible bend bars around pipes.*

*Floor of inlet shall be shaped as shown. Concrete used for shaping shall be unreinforced concrete pavement mix. No addition in concrete quantities shall be made for shaping floor of inlet.*

*No deductions in concrete quantities shall be made for pipe openings.*

*All bars are #4 @ 6" spacing and shall have a minimum clearance of 1 1/2" unless otherwise noted on the plans.*

*The top of the inlet shall be set level.*

*The grate shall be fabricated from standard or commercial grade structural steel and black steel pipe. The unit shall be hot dipped, galvanized after fabrication, in accordance with ASTM A123 except the weight of coating shall average not less than 2.0 ounces per square foot of actual surface and no individual test shall show less than 1.8 ounces of coating per square foot of actual surface area.*

*Note: Inlet modified from KDOT Std. No. 648*

BRIAN D. BOUTWELL LICENSED 10839 PROFESSIONAL ENGINEER 5/19/05

| No. | Revision | By | Date |
|---|---|---|---|

NEW MARKET SQUARE - PHASE 2
STORM WATER SEWER - TRUNK LINE

# TYPE C INLET DETAILS

JAMES L. ARMOUR, P.E. - CITY ENGINEER
CITY OF WICHITA PRIVATE PROJECT NO. 1582 PPS (607861)


Professional Engineering Consultants, P.A.
303 S. TOPEKA • WICHITA, KANSAS 67202
316-262-2691 • FAX 316-262-3003


| | | | |
|---|---|---|---|
| Designed by | BER, BLB | Job No. | 35-04090 |
| Drawn by | BMM, BJS | Date | July 2005 |

Sht. 4 of 10


DSNR: BLB DPER: BJS SCALE: 1=1.33
Q:\2004\04090\Phase 2 SWS Trunk\04090-C-SWS-TRUNK-INLET.PWC 09-19-2005 10:40:58 am

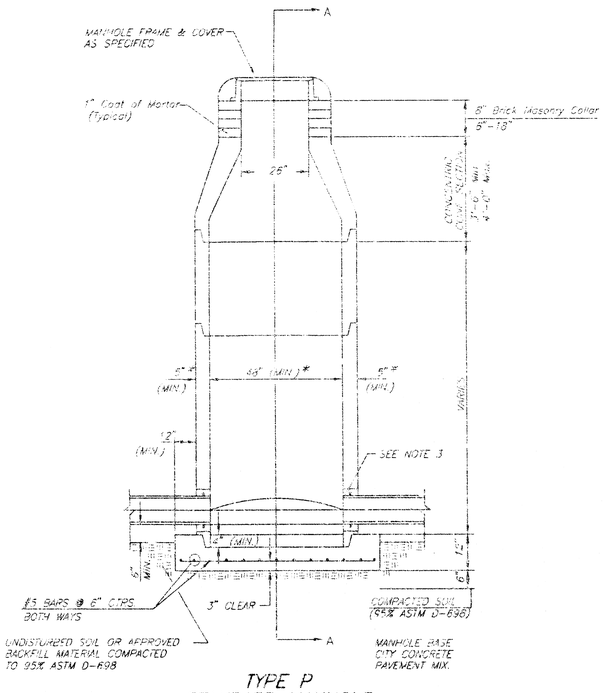


TYPE P
STANDARD MANHOLE

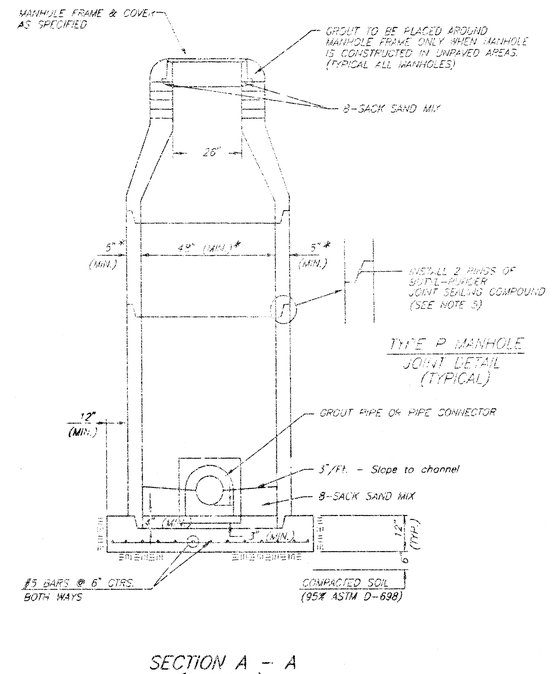


SECTION A - A
(TYPICAL)

GENERAL NOTES

PRECAST MANHOLE NOTES

1. ALL PRECAST CONCRETE MANHOLE SECTIONS SHALL CONFORM TO THE LATEST REVISIONS OF A.S.T.M. C478 AS MODIFIED BY THE SPECIFICATIONS.
2. NON-SHRINK GROUT SHALL BE NON-METALLIC TYPE.
3. APPROVED FLEXIBLE WATERSTOP GASKETS SHALL BE INSTALLED TO JOIN THE SEWER TO THE MANHOLE WALL WHEN A.B.S. COMPOSITE PIPE OR P.V.C. PIPE IS USED. FOR OTHER TYPES OF PIPE THE SEWER SHALL BE GROUTED IN PLACE WITH NON-SHRINK GROUT. THE SEWER PIPE SHALL BE SUPPORTED WITH CONCRETE ENCASEMENT A MINIMUM OF 3 FEET FROM THE MANHOLE WALL AND TO THE FIRST JOINT FOR V.C.P. SUCH THAT THE JOINT REMAINS FLEXIBLE.
4. ~~EXTERIOR MANHOLE WALLS SHALL BE COATED WITH 1 COAT MORLARMA 633 BITUMINOUS 6 JAING.~~
5. JOINT SEALING COMPOUND SHALL BE KENT SEAL NO. 2 OR APPROVED EQUAL.
6. PRECAST MANHOLES SHALL BE SET AT LEAST 4 INCHES INTO THE MANHOLE BASE.
7. TOP OF MANHOLE FLOOR SLAB SHALL BE AT LEAST 3 INCHES BELOW THE FLOW LINE OF THE OUTLET PIPE TO INSURE SUFFICIENT MINIMUM THICKNESS OF SHAPED INVERT.
8. LIFTING HOLES SHALL BE FILLED WITH NON-SHRINK GROUT AND THE INTERIOR SURFACE COATED AS SPECIFIED.
9. MORTAR USED IN MASONRY CONSTRUCTION SHALL CONTAIN 8 SACKS OF CEMENT PER CUBIC YARD. CONCRETE USED IN MANHOLE BASES SHALL CONFORM TO THE REQUIREMENTS OF CONCRETE FOR CONCRETE PAVEMENT CONSTRUCTION AS SPECIFIED IN THE CITY STANDARD PAVING SPECIFICATIONS USING CITY CONCRETE PAVEMENT MIX WITHOUT AIR ENTRAINING ADMIXTURE. MORTAR SHALL BE PLACED AROUND THE MANHOLE PING AS SHOWN ON THE DRAWINGS WHEN MANHOLES ARE CONSTRUCTED IN UNPAVED AREAS. COMPLETED MANHOLE SHALL BE WITHOUT LEAKS AND WATER TIGHT.
10. REINFORCING STEEL SHALL BE INSTALLED IN THE MANHOLE BASES AND SHALL CONSIST OF NO. 5 BARS PLACED ON 6" CENTERS IN BOTH DIRECTIONS. THE MANHOLE BASE REINFORCEMENT SHALL BE PLACED AT LEAST 3" ABOVE THE BOTTOM OF THE MANHOLE BASE. ALL COSTS FOR FURNISHING AND INSTALLING REINFORCING STEEL SHALL BE INCLUDED IH THE UNIT PRICE BID FOR THE MANHOLE.
11. OPENINGS SHALL BE CUT INTO THE MANHOLE WALL WHEN OUTSIDE DROPS ARE CONSTRUCTED ON EXISTING MANHOLES. SUCH OPENINGS CUT INTO EXISTING MANHOLES SHALL BE AS SMALL AS PRACTICAL TO FACILITATE INSTALLING AND GROUTING THE NEW PIPE IN PLACE. WATERSTOP GASKETS SHALL BE USED WITH P.V.C. AND A.B.S. COMPOSITE PIPE. THE NEW PIPE SHALL BE GROUTED INTO THE OPENING USING AN APPROVED NONSHRINK GROUT FOR THE FULL MANHOLE WALL THICKNESS. THE EXTERIOR OF THE COMPLETED CONNECTION SHALL BE SEALED WITH AN APPROVED BITUMINOUS COATING SUCH THAT THE CONNECTION WILL BE WATER TIGHT. FLOOR OF MANHOLE SHALL BE MODIFIED TO FORM NEW FLOW CHANNEL FOR THE NEW CONNECTION AS INDICATED BY THE DRAWING. THIS WORK, INCLUDING MODIFICATION OF MANHOLE FLOOR, SHALL BE PAID FOR AT THE UNIT PRICE BID FOR OUTSIDE DROP STACK CONSTRUCTED ON EXISTING MANHOLE.
12. THE FLOORS OF ALL MANHOLES SHALL BE SHAPED WITH FLOW CHANNELS SUCH THAT THE MANHOLES WILL BE SELF CLEANING AND FREE OF AREAS WHERE SOLIDS COULD BE DEPOSITED. MANHOLE FLOORS SHALL HAVE SLOPES OF 3 INCHES PER FOOT IN THE AREAS OUTSIDE OF THE FLOW CHANNELS SLOPED TOWARD THE FLOW CHANNELS.
13. PIPES INSTALLED WITHIN THE EXCAVATION MADE FOR THE MANHOLE SHALL BE CRADLED WITH CONCRETE TO THE LIMITS OF THE MANHOLE EXCAVATION. WHEN CLAY PIPE IS USED, THE CRADLE SHALL EXTEND TO THE FIRST JOINT OUTSIDE THE MANHOLE. THE CRADLE SHALL BE TERMINATED AT THE CLAY PIPE JOINT IN A MANNER WHICH WILL MAINTAIN THE FLEXIBILITY OF THE JOINT. COST OF CRADLE WITHIN MANHOLE EXCAVATION OR TO CLAY PIPE JOINTS ADJACENT TO MANHOLE SHALL BE INCLUDED IN THE UNIT PRICE BID FOR THE MANHOLE.
14. MANHOLE COVER CASTINGS AND MANHOLE FRAME CASTINGS SHALL CONFORM TO THE REQUIREMENTS AS INDICATED IN THE STANDARD SPECIFICATIONS AND AS SHOWN IN THE STANDARD DETAIL DRAWING.
15. STANDARD MANHOLES AND STANDARD INSIDE DROP MANHOLES SHALL BE BID AS STANDARD MANHOLES FOR THE TYPE AND DIAMETER INDICATED. OUTSIDE DROP MANHOLES SHALL BE BID AS STANDARD OUTSIDE DROP MANHOLES FOR THE TYPE AND DIAMETER INDICATED. ALL MANHOLE DIAMETERS WILL BE 4' UNLESS INDICATED OTHERWISE.
16. A BRICK MASONRY COLLAR SHALL BE INSTALLED BETWEEN THE CAST IRON FRAME AND THE CONCENTRIC CONE. THE COLLAR WILL HAVE 8" WALLS AND A VERTICAL HEIGHT OF 6" MINIMUM AND 18" MAXIMUM. A 1" COAT OF MORTAR WILL BE PLASTERED ON THE OUTSIDE OF THE COLLAR. THE USE OF PRE-CAST CONCRETE SPACERS FOR MANHOLE TOP ADJUSTMENT IS ALSO ALLOWED.

## SPECIAL PROJECT NOTES

* TYPE E MANHOLES HAVING A 5' INSIDE DIAMETER BARREL SHALL HAVE 6" THICK (MIN.) REINFORCED CONCRETE WALLS.

* TYPE P MANHOLES HAVING A 6' INSIDE DIAMETER BARREL SHALL HAVE 7" THICK (MIN.) REINFORCED CONCRETE WALLS.

PRECAST MANHOLE BASES SHALL HAVE A MINIMUM THICKNESS OF 12" AND SHALL EXTEND A MINIMUM OF 12" BEYOND THE OUTSIDE WALL OF THE MANHOLE BARREL.

| No. | Revision | By | Date |
|---|---|---|---|

NEWMARKET SQUARE - PHASE 2
STORM WATER SEWER - TRUNK LINE

# TYPE P MANHOLE DETAILS

JAMES L. ARMOUR, P.E. - CITY ENGINEER
CITY OF WICHITA PRIVATE PROJECT NO. 1582 PPS (607861)


Professional Engineering Consultants, P.A.
303 S. TOPEKA - WICHITA, KANSAS 67202
316-262-2691 • FAX 316-252-3003


| Designed by | BER | Job No. | 35-04090 | SN. 5 of 10 |
|---|---|---|---|---|
| Drawn by | BJS | Date | July 2005 | |


DGNR: BJS OPER: BJS SCALE: 1=1.00
Q:\2004\04090\Phase 2 SWS Trunk\04090-C-SWS-TRUNK-TYPE P MANHOLE 09-19-2005 10:14:32 am

# MANHOLE FRAME AND COVER DETAIL

ADOPTED AS STANDARD DESIGN BY
CITY OF WICHITA, KANSAS

MANHOLE COVER
Weight = 180 Lbs.

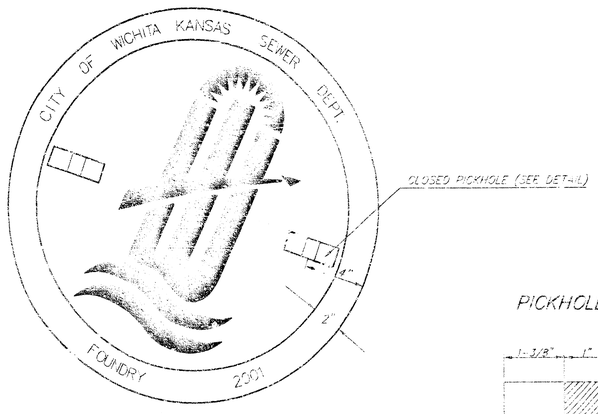


TOP VIEW

PICKHOLE DETAIL




TOP VIEW

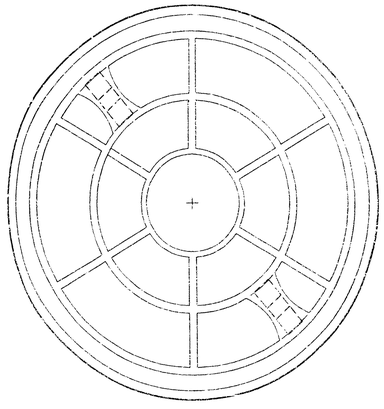

BOTTOM VIEW

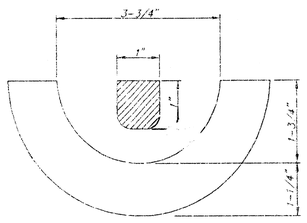


SECTION VIEW

MANHOLE FRAME
Weight = 240 Lbs.

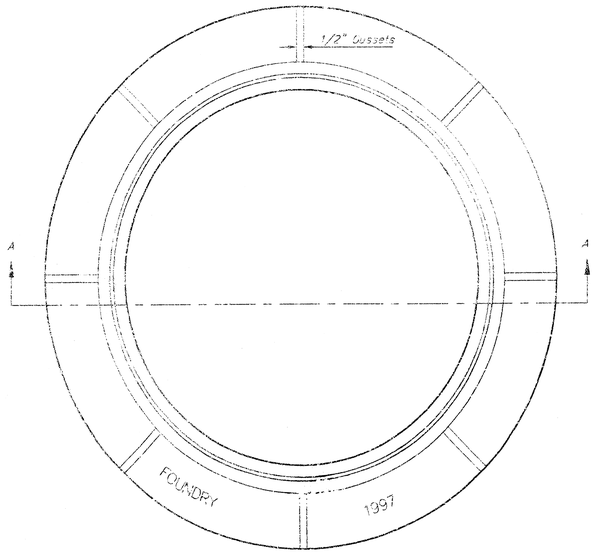


TOP VIEW

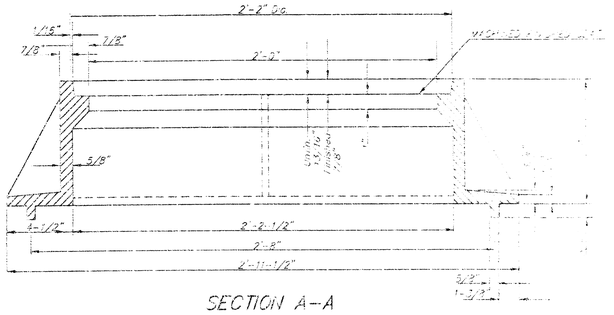


SECTION A-A
MUD RING

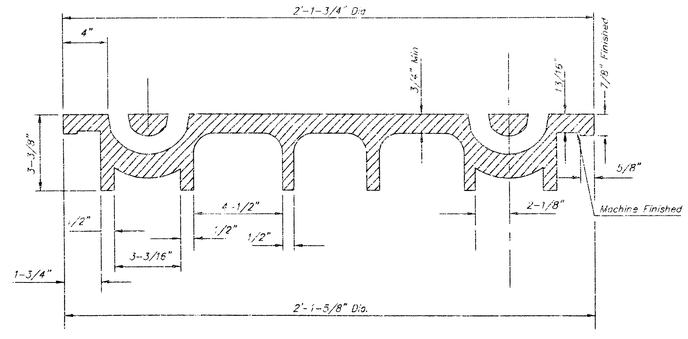


SECTION VIEW

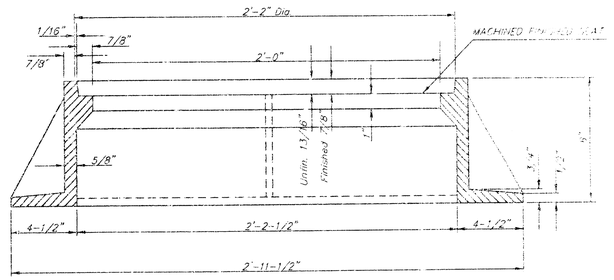


SECTION A-A

## GENERAL NOTES

1. MANHOLE CASTINGS SHALL BE MANUFACTURED USING GOOD QUALITY GRAY IRON CONFORMING TO CLASS 30 OF A.S.T.M. DESIGNATION A-48. DIMENSIONS AND WEIGHTS SHOWN ON THE DETAILED DRAWINGS SHALL BE CONSIDERED AS MINIMUM REQUIREMENTS AND ANY DEVIATIONS FROM THE DIMENSIONS SHOWN MUST BE SPECIFICALLY APPROVED. THE FINISHED CASTINGS SHALL BE OF UNIFORM QUALITY, FREE FROM BLOWHOLES, PORPOSITY, HARD SPOTS, SHRINKAGE DISTORTIONS OR OTHER DEFECTS.

2. MANHOLE CASTINGS SHALL WEIGH A MINIMUM OF 180 POUNDS ON THE SOLID COVER AND 240 POUNDS ON THE MANHOLE RING. THIS IS A TOTAL OF 420 POUNDS ON A RING AND COVER SET. CASTINGS WEIGHING LESS THAN THE MINIMUM SPECIFICATIONS WILL NOT BE ACCEPTED.

3. MANHOLE CASTINGS SHALL BE MANUFACTURED SUCH THAT A COVER MANUFACTURED BY ANY ONE FOUNDRY WILL FIT INTERCHANGEABLY INTO A FRAME MANUFACTURED BY ANOTHER FOUNDRY AND STILL MEET ALLOWABLE CLEARANCES AND NON-ROCKING REQUIREMENTS. THIS WILL REQUIRE MANUFACTURING OF THE MATCHING FACES ON THE COVER AND THE FRAME TO CLOSE TOLERANCES.

4. THE OUTSIDE CIRCUMFERENCE OF THE VERTICAL FACE OF THE COVER AND THE INSIDE CIRCUMFERENCE OF THE VERTICAL FACE IN THE FRAME RECESS SHALL BE MANUFACTURED TO TOLERANCES SUCH THAT THE CLEARANCE BETWEEN THE COVER AND FRAME WILL NOT EXCEED 1/8" AT ANY POINT AROUND THE CIRCUMFERENCE OF THE COVER. THE SEATING SURFACES BETWEEN THE COVER AND FRAME SHALL BE MACHINED SUCH THAT THESE SEATING SURFACES SHALL MAKE FULL CONTACT FOR THEIR FULL CIRCUMFERENCE TO PRECLUDE THE COVER FROM ROCKING IN THE FRAME.

5. THE MANHOLE FRAME AND COVER SHALL BE MARKED WITH LETTERING INDICATING THE NAME OF THE MANUFACTURER AND THE YEAR WHEN THE COVER OR FRAME WAS CAST. THE COVER SHALL BE FURTHER IDENTIFIED WITH REGARDS TO OWNERSHIP USING LETTERS AT LEAST 1 INCH IN HEIGHT. THIS IDENTIFICATION SHALL BE "CITY OF WICHITA SEWER DEPARTMENT". THE WORD DEPARTMENT MAY BE ABBREVIATED. THE TEXTURE OF THE TOP SURFACE OF THE COVER SHALL BE MANUFACTURED WITH THE CITY OF WICHITA LOGO AS INDICATED ON THE DRAWINGS. SMOOTH BLOCKOUTS SHALL BE UTILIZED TO HIGHLIGHT THE LETTERING ON THE COVER SURFACE. THE TOTAL AREA OF SMOOTH SURFACE BLOCKOUT SHALL NOT EXCEED THE AREA AS INDICATED ON THE DRAWING. POSITIONING OF SMOOTH BLOCKOUTS AND LETTERING MAY VARY FROM THAT SHOWN ON THE DETAILED DRAWING.


THE CITY OF WICHITA
CITY ENGINEER'S OFFICE
CITY HALL SEVENTH FLOOR
455 NORTH MAIN STREET
WICHITA, KANSAS 67202
(316) 268-4501
(316) 268-4114 FAX


MANHOLE FRAME AND COVER

JAMES L. ARMOUR, P.E. - CITY ENGINEER

| PROJECT NUMBER | OCA NO. |
|---|---|
| 1582 PPS | (607881) |
| DATE | SHEET 6 OF 10 |
| MAR 96 | |


DSNR: BJG OPER: BJS SCALE: 1=1.00
C:\2004\04090\Phase 2 SWS Trunk\04090-C-SWS-TRUNK-MHFRM-COVR 09-19-2005 10:46:57 am

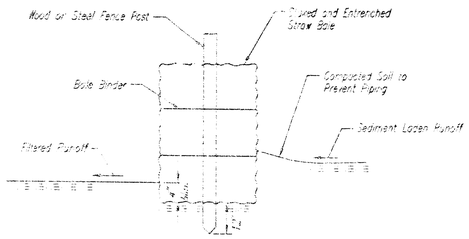


## STRAW BALE BARRIERS

Material Specification:

Bale slope barriers may be constructed of wheat straw, oat straw, prairie hay, or bromegrass hay that is free of weeds declared noxious by the Kansas State Board of Agriculture.
The stakes used to anchor the bales should be a hardwood material with the following minimum dimensions: 2" square (nominal) by 4' long.

Placement:

A slope barrier should be used at the toe of a slope when a ditch does not exist. The slope barrier should be placed on nearly level ground 5' to 10' away from the toe of a slope. The barrier is placed away from the toe of the slope to provide adequate storage for settling out sediment.
When practicable, bale slope barriers should be placed along contours to avoid a concentration of flow.
Bale slope barriers can also be placed along right-of-way fence lines to keep sediment from crossing onto adjacent property. When placed in this manner, the slope barrier will not likely follow contours.

Proper installation method:

Excavate a trench the length of the planned slope barrier that is 4" deep and a bale's width wide. Make sure that the trench is excavated along a single contour. When practicable, slope barriers should be placed along contours to avoid a concentration of flow. Place the soil on the upslope side of the trench for later use.
Place the bales in the trench, making sure that they are butted tightly. Two stakes should be driven through each bale along the centerline of the ditch check, approximately 6" to 8" in from the bale ends. Stakes should be driven at least 12" into the ground.
Once all the bales have been installed and anchored, place the excavated soil against the upslope side of the check and compact it. The compacted soil should be no more than 3" to 4" deep.

List of common placement/installation mistakes to avoid:

When practical, do not place bale slope barriers across contours. Slope barriers should be placed along contours to avoid a concentration of flow. Concentrated flow over a slope barrier creates a scour hole on the downslope side of the barrier. The scour hole eventually undermines the bales and the barrier fails.
Do not place bale slope barriers in areas with shallow soils underlain by rock. If the barrier is not anchored sufficiently it will wash out.
Bale slope barriers must be dug into the ground. Bales at ground level do not work because they allow water to flow under the barrier.

Inspection and Maintenance:

Bale slope barriers should be inspected every 7 days and within 24 hours of a rainfall of 1/2" or more. The following is a list of questions that should be addressed during each inspection:

Are there any points along the slope barrier where water is concentrating?
Does water flow under the slope barrier?
Does water flow through spaces between abutting bales?
Are any bales dislodged?
Are bales decomposing due to age and/or water damage?
Does sediment need to be removed from behind the slope barrier?

NOTE: Point A must be higher than Point B so that water flows over the bales and not around them.

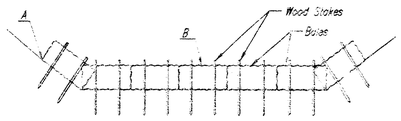


## STRAW BALE DITCH CHECKS

Material Specification:

Bale ditch checks may be constructed of wheat straw, oat straw, prairie hay, or bromegrass hay that is free of weeds declared noxious by the Kansas State Board of Agriculture.
The stakes used to anchor the bales should be a hardwood material with the following minimum dimensions: 2" square (nominal) by 4' long.
Optional: The downstream scour apron should be constructed of a double-netted straw erosion-control blanket at least 5' wide.
Optional: The metal landscape staples used to anchor the erosion-control blanket should be at least 8" long.

Placement:

Bale ditch checks should be placed perpendicular to the flowline of the ditch.
The ditch check should extend far enough so that the ground level at the ends of the check is higher than the top of the lowest center bale. This prevents water from flowing around the check.
Checks should not be placed in ditches where high flows are expected. Rock checks should be used instead.
Bales should be placed in ditches with slopes of 5% or less. For slopes steeper than 8%, rock checks should be used.
The following table provides check spacing for a given ditch grade:

Ditch Check Spacing

| Ditch grade (%) | Check Spacing (feet) |
|---|---|
| 0.5 | 200 |
| 1.0 | 200 |
| 2.0 | 100 |
| 3.0 | 65 |
| 4.0 | 50 |
| 5.0 | 40 |
| 6.0 | 30 |

Proper installation method:

Excavate a trench perpendicular to the ditch flowline that is 4" deep and a bale's width wide. Extend the trench in a straight line along the entire length of the proposed ditch check. Place the soil on the upstream side of the trench--it will be used later.
Optional: On the downstream side of the trench, roll out a length of erosion-control blanket (scour apron) equal to the length of the trench. Place the upstream edge of the erosion-control blanket along the bottom upstream edge of the trench. The erosion control blanket should be anchored in the trench with one row of 8" landscape staples placed on 18" centers. The remainder of the erosion-control blanket (the portion that is not lying in the trench) will serve as the downstream scour apron. This section of the blanket should be anchored to the ground with 8" landscape staples placed around the perimeter of the blanket on 18" centers. The remainder of the blanket should be anchored using two evenly spaced rows of 8" landscape staples on 18" centers placed perpendicular to the flowline of the ditch.
Place the bales in the trench, making sure that they are butted tightly. Two stakes should be driven through each bale along the centerline of the ditch check, approximately 6" to 8" in from the bale ends. Stakes should be driven at least 12" into the ground.
Once all the bales have been installed and anchored, place the excavated soil against the upstream side of the check and compact it. The compacted soil should be no more than 3" to 4" deep and extend upstream no more than 24".

List of common placement/installation mistakes to avoid:

Do not place a bale ditch check directly in front of a culvert outlet. It will not stand up to the concentrated flow.
Do not place bale ditch checks in ditches that will likely experience high flows. They will not stand up to concentrated flow.
Follow prescribed ditch-check spacing guidelines. If spacing guidelines are exceeded, erosion will occur between the ditch checks.
Do not allow water to flow around the ditch check. Make sure that the ditch check is long enough so that the ground level at the ends of the check is higher than the top of the lowest center bale.
Do not place bale ditch checks in channels with shallow soils underlain by rock. If the check is not anchored sufficiently, it will wash out.
Bale ditch checks must be dug into the ground. Bales at ground level do not work because they allow water to flow under the check.

Inspection and Maintenance:

Bale ditch checks should be inspected every 7 days and within 24 hours of a rainfall of 1/2" or more. The following is a list of questions that should be addressed during each inspection:

Does water flow around the ditch check?
Does water flow under the ditch check?
Does water flow through spaces between abutting bales?
Are any bales and/or scour aprons (optional) dislodged?
Are bales decomposing due to age and/or water damage?
Does sediment need to be removed from behind the ditch check?

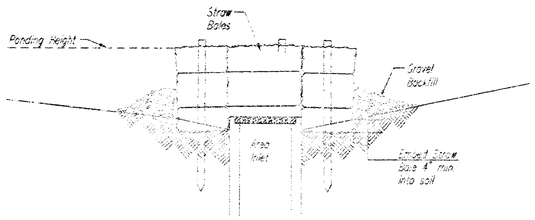


SECTION A-A

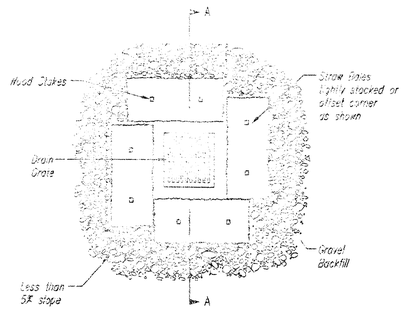


## STRAW BALE BARRIERS FOR AREA INLETS
(INLET PROTECTION)

Material Specification:

Bale area inlet barriers should be constructed of wheat straw, oat straw, prairie hay, or bromegrass hay that is free of weeds declared noxious by the Kansas State Board of Agriculture.
The stakes used to anchor the bales should be a hardwood material with the following minimum dimensions: 2" square (nominal) by 4' long.

Placement:

Bale area inlet barriers should be placed directly around the perimeter of a drop inlet.
When a bale area inlet barrier is located near an inlet that has steep approach slopes, the storage capacity behind the barrier is drastically reduced. Timely removal of sediment must occur for a barrier to operate properly in this location.

Proper Installation Method:

Excavate a trench around the perimeter of the area inlet that is at least 4" deep by a bale's width wide.
Place the bales in the trench, making sure that they are butted tightly. Some bales may need to be shortened to fit into the trench around the area inlet. Two stakes should be driven through each bale, approximately 6" to 8" in from the bale ends.
Stakes should be driven at least 12" into the ground.
Once all the bales have been installed and anchored, place the excavated soil against the receiving side of the barrier and compact it. The compacted soil should be no more than 3" to 4" deep.
Note: When a bale area inlet barrier is placed in a shallow median ditch, make sure that the top of the barrier is not higher than the paved road. In this configuration, water may spread onto the roadway causing a hazardous condition.

List of common placement installation mistakes to avoid:

Bales should be placed directly against the perimeter of the area inlet. This allows overtopping water to flow directly into the inlet instead of onto nearby soil causing scour.
Bale area inlet barriers must be dug into the ground. Bales at ground level do not work because they allow water to flow under the barrier.

Inspection and Maintenance:

Bale area inlet barriers should be inspected every 7 days and within 24 hours of a rainfall 1/2" or more. The following is a list of questions that should be addressed during each inspection:

Does water flow under the area inlet barrier?
Does water flow through spaces between abutting bales?
Are any bales dislodged?
Are bales decomposing due to age and/or water damage?
Does sediment need to be removed from behind the area inlet barrier?

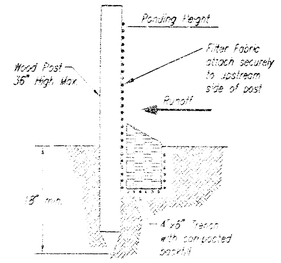


## SILT FENCE BARRIERS

SILT FENCE BARRIERS

Material Specification:

Silt fence fabric should conform to the AASHTO M288 95 silt fence specification.
The posts used to support the silt fence fabric should be a hardwood material with the following minimum dimensions: 2" square (nominal) by 4' long.
Silt fence fabric should be attached to the wooden posts with staples, wire, zip ties, or nails.

Placement:

A slope barrier should be used at the toe of a slope when a ditch does not exist. The slope barrier should be placed on nearly level ground 5' to 10' away from the toe of a slope. The barrier is placed away from the toe of the slope to provide adequate storage for settling out sediment.
When practicable, silt fence slope barriers should be placed along contours to avoid a concentration of flow.
Silt fence slope barriers can also be placed along right-of-way fence lines to keep sediment from crossing onto adjacent property. When placed in this manner, the slope barrier will not likely follow contours.

Proper installation method:

Excavate a trench the length of the planned slope barrier that is 6" deep by 4" wide.
Make sure that the trench is excavated along a single contour. When practicable, slope barriers should be placed along contours to avoid a concentration of flow. Place the soil on the upslope side of the trench for later use.
Roll out a continuous length of silt fence fabric on the downslope side of the trench.
Place the edge of the fabric in the trench starting at the top upslope edge. Line all three sides of the trench with the fabric. Backfill over the fabric in the trench with the excavated soil and compact. After filling the trench, approximately 24" to 36" of silt-fence fabric should remain exposed.
Lay the exposed silt fence upslope of the trench to clear an area for driving in the posts.
Just downslope of the trench, drive posts into the ground to a depth of at least 18".
Place posts no more than 4' apart.
Attach the silt fence to the anchored post with staples, wire, zip ties, or nails.

List of common placement/installation mistakes to avoid:

When practicable, do not place silt fence slope barriers across contours. Slope barriers should be placed along contours to avoid a concentration of flow. When the flow concentrates, it overtops the barrier and the silt fence slope barrier quickly deteriorates.
Do not place silt-fence posts on the upslope side of the silt fence fabric. In this configuration, the force of the water is not restricted by the posts, but only by the staples (wire, zip ties, nails, etc.). The silt fence will rip and fail.
Do not place silt fence slope barriers in areas with shallow soils underlain by rock. If the barrier is not sufficiently anchored, it will wash out.
Silt fence slope barriers must be dug into the ground--silt fence at ground level does not work because water will flow underneath.

Inspection and Maintenance:

Silt fence slope barriers should be inspected every 7 days and within 24 hours of a rainfall of 1/2" or more. The following is a list of questions that should be addressed during each inspection:

Are there any points along the slope barrier where water is concentrating?
Does water flow under the slope barrier?
Do the silt fences sag excessively?
Has the silt fence torn or become detached from the posts?
Does sediment need to be removed from behind the slope barrier?

CITY OF WICHITA

# SOIL EROSION BMP DETAILS

JAMES L. ARMOUR, P.E.
CITY ENGINEER

| PROJECT NUMBER | UCA NO. |
|---|---|
| 1582 PPS | (507861) |
| DATE: MAY 2001 | SHEET 7 OF 10 |

DGN: 6LB OPER: BJS SCALE: 1=1.00
Q:_2004\04090\Phase 2 SWS Trunk\04090-C-SWS-TRUNK-SEBMP_PEC_DTL01-R14 09-19-2005 10:53:27 am

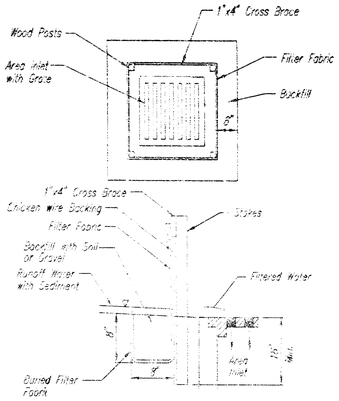


SILT FENCE BARRIERS FOR AREA INLETS
(INLET PROTECTION)

Material Specification:

Silt fence fabric should conform to the AASHTO M288 96 silt fence specification.
The wire or polymeric mesh backing used to help support the silt fence fabric should conform to the AASHTO M288 96 silt fence specification.
The posts used to support the silt fence fabric should be a hardwood material with the following minimum dimensions: 2" square (nominal) by 4' long.
The material used to frame the tops of the posts should be 1" by 4" boards.
Silt fence fabric and support backing should be attached to the wooden posts and frame with staples, wire, zip ties, or nails.

Placement:

Place a silt fence drop inlet barrier in a location where it is unlikely to be overtopped.
Water should flow through silt fence, not over it. Silt fence barriers for area inlets often fail when repeatedly overtopped.
When used as a barrier for area inlets, silt fence fabric and posts must be supported at the top by a wooden frame.
When a silt fence barrier for area inlets is located near an inlet that has steep approach slopes, the storage capacity behind the barrier is drastically reduced. Timely removal of sediment must occur for a barrier to operate properly in this location.

Proper installation method:

Excavate a trench around the perimeter of the area inlet that is at least 8" deep by 8" wide.
Drive posts to a depth of at least 18" around the perimeter of the area inlet.
The distance between posts should be 4' or less. If the distance between two adjacent corner posts is more than 4', add another post(s) between them.
Connect the tops of all the posts with a wooden frame made of 1" by 4" boards. Use nails or screws for fastening.
Attach the wire or polymeric-mesh backing to the outside of the post/frame structure with staples, wire, zip ties, or nails.
Roll out a continuous length of silt fence fabric long enough to wrap around the perimeter of the area inlet. Add more length for overlapping the fabric joint. Place the edge of the fabric in the trench, starting at the outside edge of the trench. Line all three sides of the trench with the fabric. Backfill over the fabric in the trench with the excavated soil and compact. After filling the trench, approximately 24" to 36" of silt fence fabric should remain exposed.
Attach the silt fence to the outside of the post/frame structure with staples, wire, zip ties, or nails. The joint should be overlapped to the next post.

Note: When a silt fence barrier for area inlet is placed in a shallow median ditch, make sure that the top of the barrier is not higher than the paved road. In this configuration, water may spread onto the roadway causing a hazardous condition.

List of common placement/installation mistakes to avoid:

Water should flow through a silt fence barrier for area inlet-not over it. Place a silt fence barrier for area inlet in a location where it is unlikely to be overtopped. Silt fence barrier for area inlets often fail when repeatedly overtopped.
Do not place posts on the outside of the silt fence barrier for area inlet. In this configuration, the force of the water is not resisted by the posts, but only by the staples (wire, zip ties, nails, etc.). The silt fence will rip and fail.
Do not install silt fence barrier for area inlets without framing the top of the posts.
The corner posts around area inlets are stressed in two directions whereas a normal silt fence is only stressed in one direction. This added stress requires more support.

Inspection and Maintenance:

Silt fence barrier for area inlets should be inspected every 7 days and within 24 hours of a rainfall of 1/2" or more. The following is a list of questions that should be addressed during each inspection:

Does water flow under the silt fence?
Does the silt fence sag excessively?
Has the silt fence torn or become detached from the posts?
Does sediment need to be removed from behind the area inlet barrier?

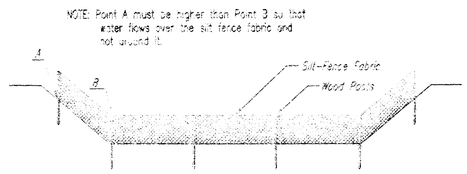


ELEVATION

SILT FENCE DITCH CHECKS
(STREAM PROTECTION)

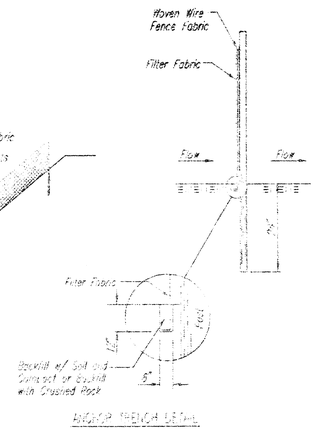


ANCHOR TRENCH DETAIL

Material Specification:

Silt fence fabric should conform to the AASHTO M288 96 silt fence specification.
The posts used to support the silt fence fabric should be a hardwood material with the following minimum dimensions: 2" square (nominal) by 4' long.
Silt fence fabric should be attached to the wooden posts with staples, wire, zip ties, or nails.

Placement:

Place silt fence in ditches where it is unlikely that it will be overtopped.
Water should flow through a silt fence ditch check, not over it. Silt fence ditch checks often fail when overtopped.
Silt fence ditch checks should be placed perpendicular to the flowline of the ditch.
The silt fence should extend far enough so that the ground level at the ends of the fence is higher than the top of the low point of the fence. This prevents water from flowing around the check.
Checks should not be placed in ditches where high flows are expected. Rock checks should be used instead.
Silt fence should be placed in ditches with slopes of 6% or less. For slopes steeper than 6%, rock checks should be used.

The following table provides check spacing for a given ditch grade:

| Ditch Check Ditch grade (%) | Spacing Check Spacing (feet) |
|---|---|
| 0.5 | 200 |
| 1.0 | 200 |
| 2.0 | 100 |
| 3.0 | 65 |
| 4.0 | 50 |
| 5.0 | 40 |
| 6.0 | 30 |

Proper installation method:

Excavate a trench perpendicular to the ditch flowline that is at least 12" deep by 6" wide.
Extend the trench in a straight line along the entire length of the proposed ditch check.
Place the soil on the upstream side of the trench for later use.
Roll out a continuous length of silt fence fabric on the downstream side of the trench.
Place the edge of the fabric in the trench starting at the top upstream edge of the trench. Line two sides of the trench with the fabric as shown on detail. Backfill over the fabric in the trench with the excavated soil and compact. After filling the trench, approximately 24" to 36" of silt fence fabric should remain exposed.
Lay the exposed silt fence on the upstream side of the trench to clear an area for driving in the posts. Just downstream of the trench, drive posts into the ground to a depth of at least 24". Place posts no more than 4' apart.
Attach the silt fence to the anchored post with staples, wire, zip ties, or nails.

List of common placement/installation mistakes to avoid:

Water should flow through a silt fence ditch check-not over it. Place silt fence in ditches where it is unlikely that it will be overtopped. Silt fence installations quickly deteriorate when water overtops them.
Do not place silt fence posts on the upstream side of the silt fence fabric. In this configuration, the force of the water is not restricted by the posts, but only by the staples (wire, zip ties, nails, etc.). The silt fence will rip and fail.
Do not place a silt fence ditch check directly in front of a culvert outlet. It will not stand up to the concentrated flow.
Do not place silt fence ditch checks in ditches that will likely experience high flows. They will not stand up to concentrated flow.
Follow prescribed ditch check spacing guidelines. If spacing guidelines are exceeded, erosion will occur between the ditch checks.
Do not allow water to flow around the ditch check. Make sure that the ditch check is long enough so that the ground level at the ends of the fence is higher than the low point on the top of the fence.
Do not place silt fence ditch checks in channels with shallow soils underlain by rock. If the check is not anchored sufficiently, it will wash out.

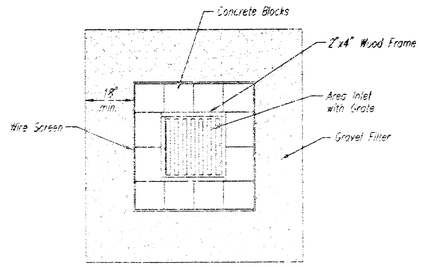


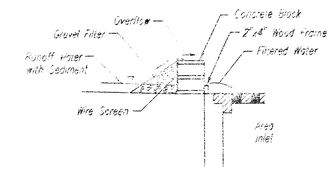


CONCRETE BLOCK FILTER FOR AREA DRAIN
(INLET PROTECTION)

Gravel barriers provide little filtering of large inflow waters. However, when installed correctly and maintained, they can effectively treat low runoff flows.

Placement of gravel filters around area drains must be completed in a manner that will not cause local flooding.

Gravel filters can be used if the immediate and adjacent area to the area drain consists of soil or pavement.

Only gravel filters are to be installed on top of the pavement.

Instructions for Installing:

STEP 1: Place concrete blocks around the grate. The blocks can be stacked one or two high and should be supported by a 2"x4" board.
STEP 2: Wrap 1/2" mesh wire screen around the concrete blocks
STEP 3: Place 1" to 1-1/2" diameter rock around the blocks and wire screen. Be sure the rock extends down from the top of the concrete block.
STEP 4: To prevent damage to vehicles, signs warning drivers about the structures may be necessary.

An alternative method is use of gravel bags that are supported to prevent collapsing.

Use of rock having diameters smaller than 1" may result in clogging of pores and reduce the amount of water flowing into an inlet.

Maintenance:

All gravel filters installed around area drains should be inspected and repaired after each runoff event. Sediment should be removed when material is within 3" of the top of any block. Periodically, the gravel should be raked to increase infiltration and filtering of runoff waters. Accumulated sediment is to be removed immediately from roads and streets after every runoff event.

Inspection and Maintenance:

Silt fence ditch checks should be inspected every 7 days and within 24 hours of a rainfall of 1/2" or more. The following is a list of questions that should be addressed during each inspection:

Does water flow around the ditch check?
Does water flow under the ditch check?
Does the silt fence sag excessively?
Has the silt fence torn or become detached from the posts?
Does sediment need to be removed from behind the ditch check?

CITY OF WICHITA

# SOIL EROSION BMP DETAILS

JAMES L. ARMOUR, P.E.
CITY ENGINEER

| PROJECT NUMBER | OCA NO. |
|---|---|
| 1582 PPS | (607861) |
| DATE: MAY 2001 | SHEET 8 OF 10 |

DSNR: BLB OPER: BJS SCALE: 1=100
Q:\2004\04090\Phase 2 SWS Trunk\04090-C-SWS-TRUNK-SEDMP_PED_DTL52-R14 09-19-2005 10:54:40 am

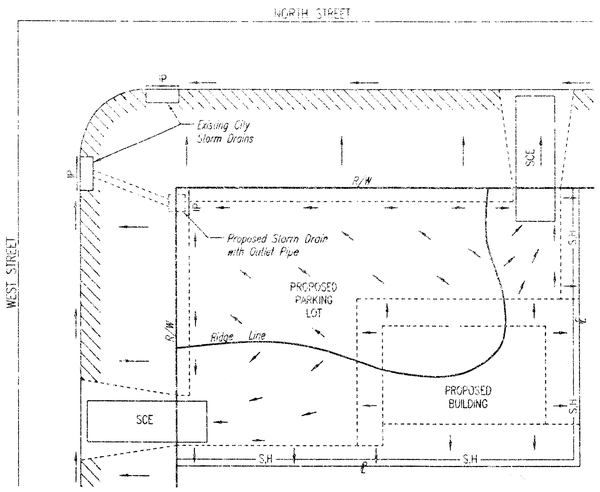


LEGEND

- Flow Direction
- IP — Inlet Protection – to be provided at all inlets subject to silt laden runoff.
- S.H — Silt Fence or Hay Bale Barrier – to be installed along property lines where runoff from construction site can run onto other properties.
- SCE — Stabilized Construction Entrance – to be used at all locations where vehicles or equipment enter or exit property.
- Back of Curb Protection – to be installed whenever curb is backfilled to less than 3 inches from top and disturbed earth exists adjacent thereto. (See City Standard Details.)

General Notes

1. This standard detail sheet is a part of your building permit. The BMP's shown on this sheet are considered minimum standards. Whenever sediment enters the streets, storm sewers, ditches, or ponds, contractor will install additional BMP's, as needed, to correct the problem.
2. Follow these general principals on all commercial building sites.
3. The soil erosion BMP's shown hereon must be in place at all times during construction until such time as the site is re-established with paving or grass.
4. Failure to install, protect, and maintain BMP's are violations of Section 15.22 of the City Code and will subject the contractor to the penalties provided therein. Included with your permit is an orange "notice" sign that must be posted on-site in a conspicuous place at all times during construction. This sign is provided to assist you in the maintenance of BMP'S.
5. Back of Curb Protection: Can include hay bale, silt fence, or Curlex barrier, as shown on City BMP standard details. This BMP must remain in place until the area between the curb and right-of-way line has been permanently stabilized.
6. The General Contractor is responsible for the installation and maintenance of all BMP's
7. Should the site abut a lake, BMP's will be installed to prevent sediment from entering the lake.
8. Any mud inadvertently tracked onto any street will be cleaned up by the general contractor at the end of each day's work.

## SOIL EROSION BMPS COMMERICAL DEVELOPMENT SITES

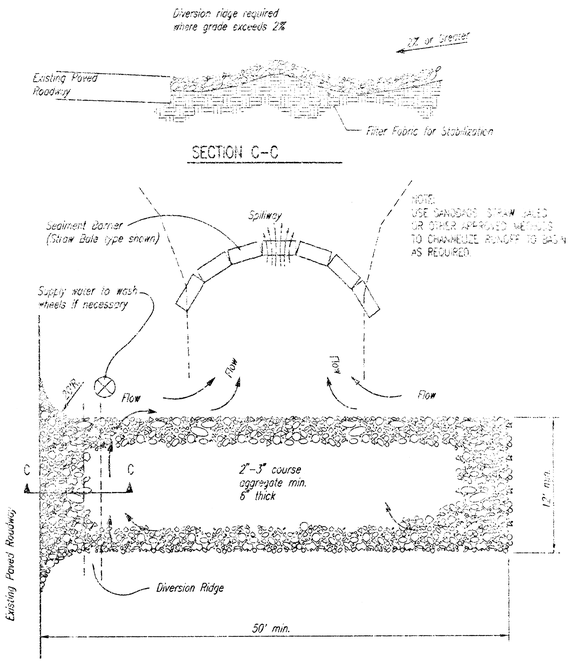


## STABILIZED CONSTRUCTION ENTRANCE

NOTES:

1. THE ENTRANCE SHALL BE MAINTAINED IN A CONDITION THAT WILL PREVENT TRACKING OR FLOWING OF SEDIMENT ONTO PUBLIC RIGHTS-OF-WAY. THIS MAY REQUIRE TOP DRESSING, REPAIR AND/OR CLEANOUT OF ANY MEASURES USED TO TRAP SEDIMENT.
2. WHEN NECESSARY, WHEELS SHALL BE CLEANED PRIOR TO ENTRANCE ONTO PUBLIC RIGHT-OF-WAY.
3. WHEN WASHING IS REQUIRED, IT SHALL BE DONE ON AN AREA STABILIZED WITH CRUSHED STONE THAT DRAINS INTO AN APPROVED SEDIMENT TRAP OR SEDIMENT BASIN, AS SHOWN ABOVE.
4. DRIVE ENTRANCES ONTO RESIDENTIAL LOTS WILL NOT BE REQUIRED TO HAVE THE SEDIMENT BARRIER SHOWN, BUT WHEEL WASHING MAY BE REQUIRED IF STABILIZED ENTRANCE IS NOT SUFFICIENT TO KEEP MUD FROM BEING TRACKED ONTO ADJACENT STREET. ENTRANCE SHALL EXTEND FROM BACK OF CURB TO DWELLING.

CITY OF WICHITA

SOIL EROSION BMP DETAILS

JAMES L. ARMOUR, P.E.
CITY ENGINEER

| PROJECT NUMBER | OCA NO. |
|---|---|
| 1582 PPS | (607861) |
| DATE: MAY 2001 | SHEET 9 OF 10 |

DSNR WLB OPER BJS SCALE: 1=1.00
Q:\2004\04090\Phase 2 SWS Trunk\04090-C-SWS-TRUNK-SEDMP_PEC_01.dgn 09-19-2005 10:56:03 am

# EVERGREEN

AN ADDITION TO WICHITA, SEDGWICK COUNTY, KANSAS

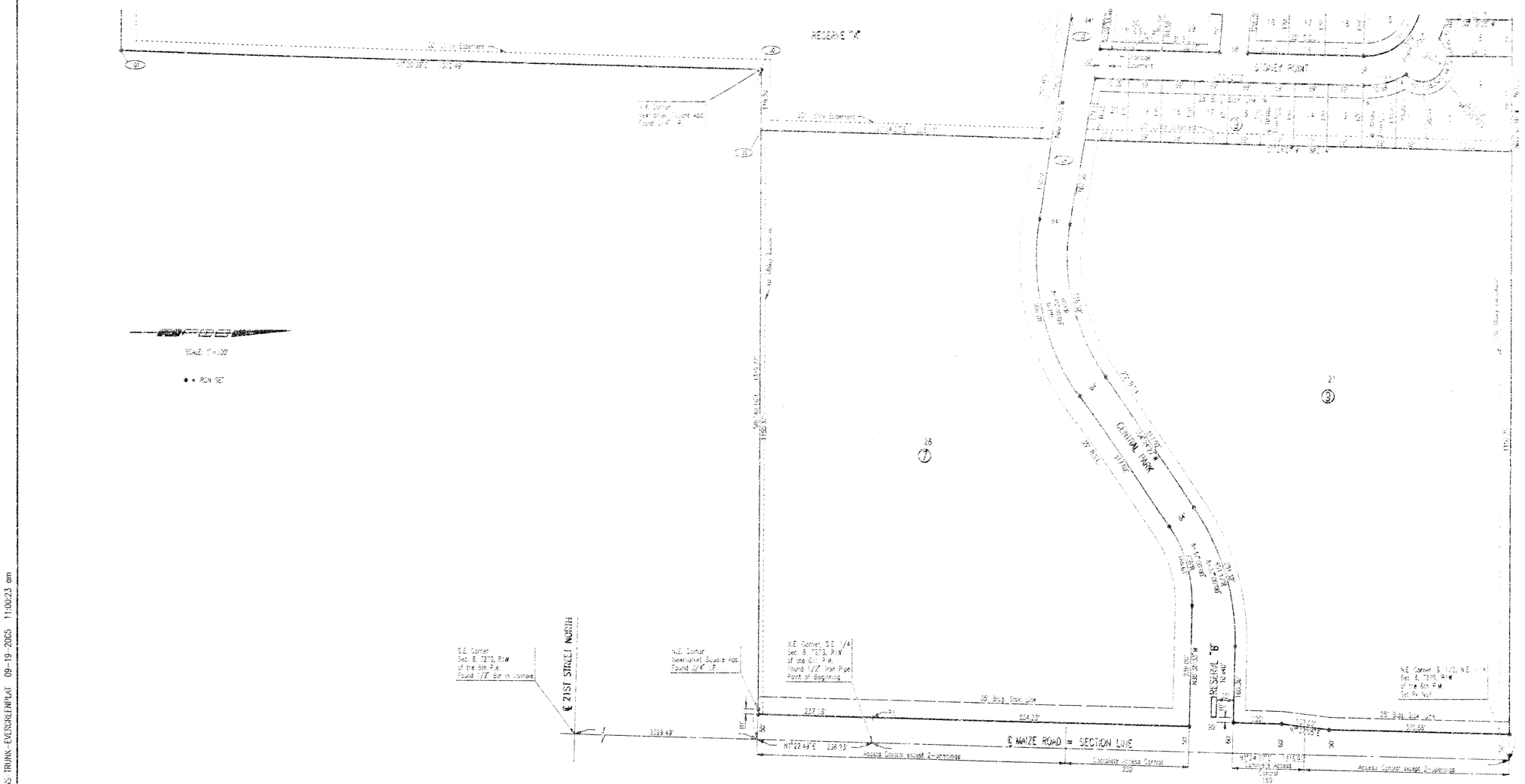


| No. | Revision | By | Date |
|---|---|---|---|

NEWMARKET SQUARE – PHASE 2
STORM WATER SEWER – TRUNK LINE

PLAT
(EVERGREEN)

JAMES L. ARMOUR, P.E.–CITY ENGINEER
CITY OF WICHITA PRIVATE PROJECT NO. 1582 PPS (607861)

Professional Engineering Consultants, P.A.
303 S. TOPEKA • WICHITA, KANSAS 67202
316-262-2691 • FAX 316-262-3003

| | | | | |
|---|---|---|---|---|
| Designed by | BER | Job No. | 35-04090 | Sht. 10 of 10 |
| Drawn by | BJS | Date | July 2005 | |

DSNR: PLB OPER: BJS SCALE: 1=100.00
Q:\2004\04090\Phase 2 SWS Trunk\04090-C-SWS-TRUNK-EVERGREENPLAT 09-19-2005 11:00:23 am

12 50 40 91