CONSTRUCTION PLANS

SANITARY SEWER EXTENSIONS

GREAT PLAINS BUSINESS PARK 3RD ADDITION

TO

THE CITY OF WICHITA, KANSAS

PRIVATE SANITARY SEWER EXTENSION TO SERVE LOT 1, BLOCK 3

JAMES ARMOUR, P.E. -- CITY ENGINEER
PRIVATE PROJECT NO. 1595-PPS
OCA NO. 607861

GENERAL NOTES:

1. Existing utility lines and their location, as shown on the plans, represent the best information obtainable for design. The contractor will be required to work around existing utilities within the right-of-way which do not conflict with proposed construction.

   Contractor will be required to provide a minimum advance notice of twenty-four (24) hours to utility companies prior to starting any excavation as follows:

Kansas One-Call	1-800-344-7233

   The Contractor must notify the following in case of an emergency:

Cox Communications	262-4270
Kansas Gas	832-3122
Westar Energy	264-1141
Aquila Networks	942-1608
Southwestern Bell Tel. Co.	268-2601
City of Wichita Water & Sewer Dept.	268-4555

2. Rubble from the removal of miscellaneous structures and excess excavation which is to be wasted shall be the disposed of on sites to be provided by the Contractor. These sites shall be approved by the Engineer as to suitability, appearance and site location. Locations that, in the opinion of the Engineer, will leave an unsightly appearance will not be approved.

   All disposal sites must be approved by the Kansas Department of Health and Environment. Material either stockpiled or disposed of in a flood plain would require a Kansas State Board of Agriculture permit. Any material dumped in waters of the United States or wetlands is subject to U.S. Corps. of Engineers permitting regulations. Any material buried or stockpiled beyond approved construction limits would require additional archaeological investigations unless buried in a previously approved borrow location.

3. The Contractor shall be responsible for maintaining continuous flow of sewage through construction. Contractor's proposed method for maintaining sewage flow shall be approved by the Engineer. Cost of maintaining flow of sewage through construction will not be paid for directly and this cost shall be considered as subsidiary to the other pay items of the work.

4. The Contractor shall be responsible for preserving property irons. The Contractor will be required to re-establish any property irons which are damaged or destroyed by his construction operations. Such irons shall be re-established by a licensed land surveyor in accordance with state laws.

5. Trees and shrubs in public right-of-way which are in direct conflict with proposed new construction shall be removed by the Contractor with the Engineer's approval. Trees and shrubs which are not in direct conflict with the proposed new construction shall be saved and protected from damage.

6. Contractor shall vacuum test all manholes according to the City of Wichita standard specifications.

7. The tops of all Manholes to be set 0.4 feet above existing ground unless otherwise noted.

8. Sewer service lines that cross over the top of water mains shall be encased in concrete, 10 feet each side of the crossing. If the sewer crosses below the water line with less than 2 feet of clearance, the sewer line joints must be at least 10 feet away from the water line or the sewer must be encased in concrete as described above. 12" clearance must be maintained between the sewer and water lines.

9. All areas disturbed by sewer construction, i.e. R/W, easements, and adjacent properties shall be restored with the same grass/sod as per AR 78.

10. Contractor shall provide construction staking.

Scale 1" = 100'

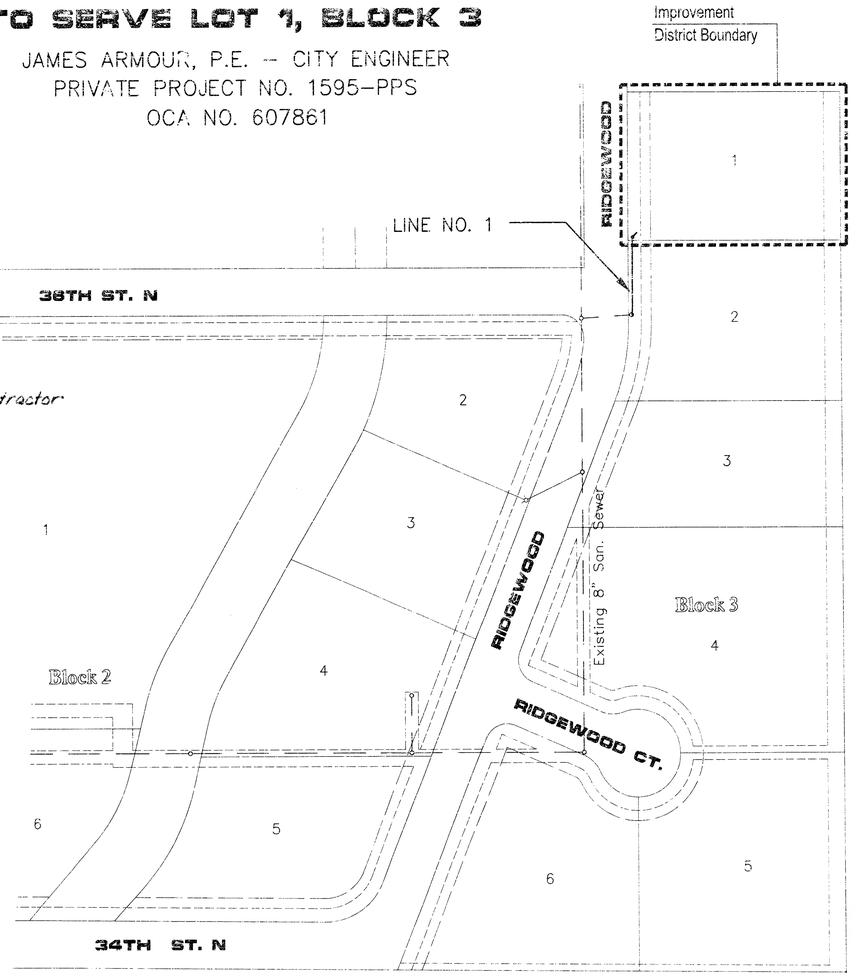

McCullough Excavation, Inc - Contractor
Gann, KE Miller - Inspector
Released 2/24/06
As-Built
Stub
.pdf by JDL 3/2/06



SEPTEMBER 2005

PLANS PREPARED BY

POE & ASSOCIATES OF KANSAS, INC.
CONSULTING ENGINEERS
5940 E. Central, Suite 200 ■ Wichita, KS 67208-4242
Phone 316/685-4114 ■ FAX 316/685-4444

INDEX

TITLE SHEET	SHEET 1
LINE NO. 1	SHEET 2
MANHOLE DETAIL	SHEET 3
RISER ASSEMBLY	SHEET 4
COORDINATE POINT LIST	SHEET 5
FINAL PLAT	SHEET 6

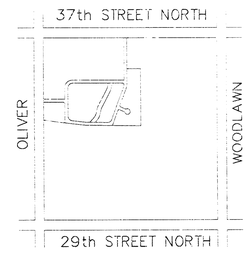

VICINITY MAP
(NO SCALE)

BENCH MARKS

City of Wichita Datum

1. 100' South of Norwood on SE corner of RCBC Hubguard.
   COW Benchmark
   Elevation 161.44

2. Southwest corner of Hubguard 100' E. of Oliver on 37th.
   COW Benchmark
   Elevation 186.84

APPROVED AS NOTED BY CITY ENGINEER OF WICHITA

SANITARY SEWER _____

Inspection and testing for this project are to be provided by a Licensed Consulting Engineering Firm under contract with the Owner/Developer. Said inspection is to be in accordance with the City of Wichita standard construction engineering practices and certified by a Licensed Professional Engineer. No work shall be performed in dedicated easements or public right-of-way by the Contractor without such inspection nor shall work be commenced without written authorization by the City Engineer. All construction and materials shall comply with the City of Wichita Specifications and Standards (on file and available in the City Engineer's Office).

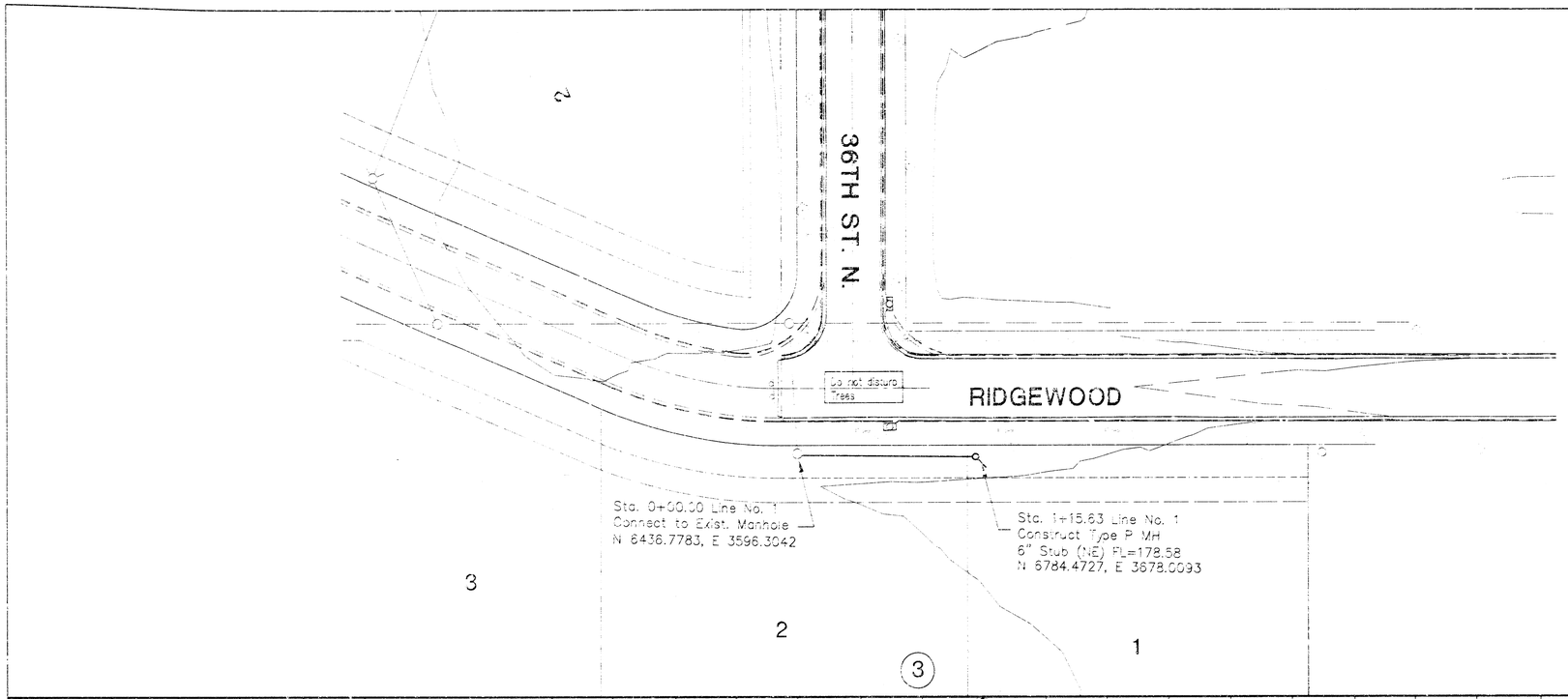

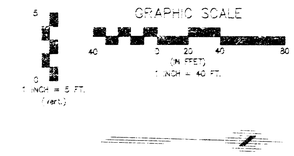

Expected area to be seeded – 1 acre

Contractor shall seed all disturbed areas with a mix of brome grass (50lbs/ac) and fescue (150 lbs/ac), fertilize with 12-12-12 at 350lbs/ac and mulched with the following:

Type of Material	Tons per Acre Required
Prairie Hay	2.0
Bromegrass	2.0
Straw	2.0

Mulch shall be punched into the soil so that it is partially covered.

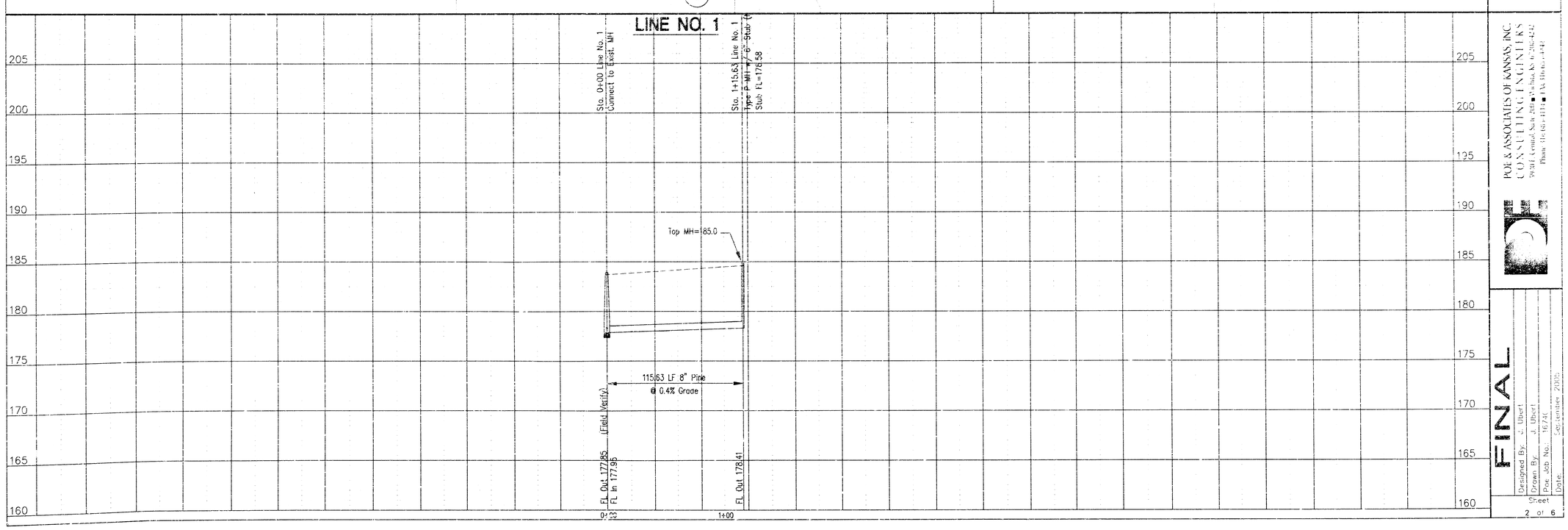

GREAT PLAINS BUSINESS PARK 3rd ADDITION
LOT 1, BLOCK 3, SANITARY SEWER EXTENSION
LINE NO. 1

CITY OF WICHITA, KANSAS
JAMES ARKOSH, PE - CITY ENGINEER
PROJECT No. 1590-4115 - MAPD CASE No. 2005

POE & ASSOCIATES OF KANSAS, INC.
CONSULTING ENGINEERS
9700 E. Central, Suite 200 ■ Wichita, Kansas 67206-2422
Phone (316) 681-1111 ■ FAX (316) 681-1442

FINAL

Designed By: J. Ubert
Drawn By: J. Ubert
Poe Job No.: 16741
Date: September 2005

Sheet 2 of 6

SEWER APPURTENANCES DETAILS

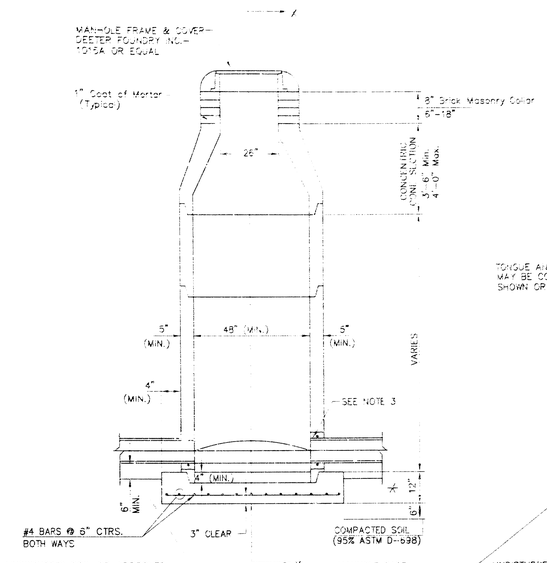

TYPE P
STANDARD MANHOLE

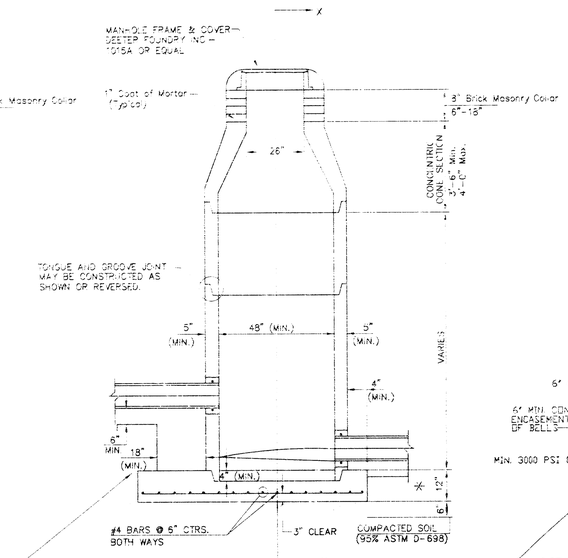

TYPE P
INSIDE DROP MANHOLE

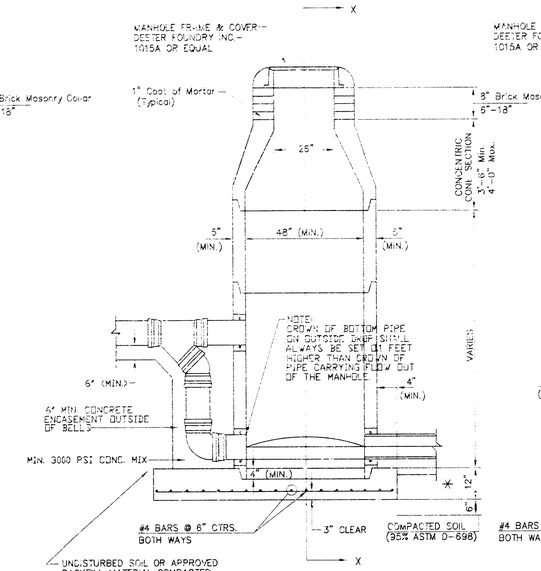

TYPE P
OUTSIDE DROP MANHOLE

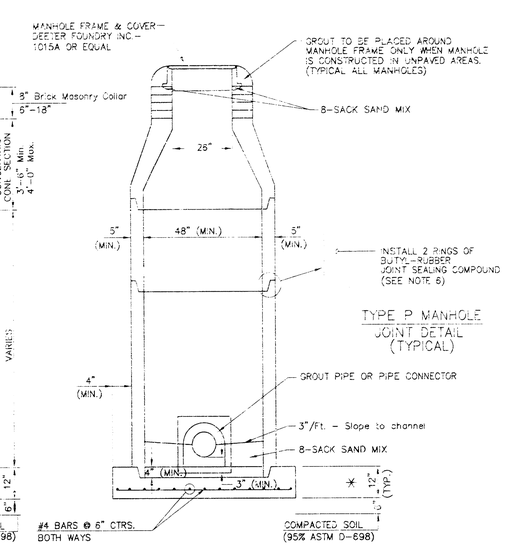

TYPE P
JOINT DETAIL
(TYPICAL)

GENERAL NOTES

PRECAST MANHOLE NOTES

1. ALL PRECAST CONCRETE MANHOLE SECTIONS SHALL CONFORM TO THE LATEST REVISIONS OF A.S.T.M. C478 AS MODIFIED BY THE SPECIFICATIONS.
2. NON-SHRINK GROUT SHALL BE NON-METALLIC TYPE.
3. APPROVED FLEXIBLE WATERSTOP GASKETS SHALL BE INSTALLED TO JOIN THE SEWER TO THE MANHOLE WALL WHEN A.B.S. COMPOSITE PIPE OR P.V.C. PIPE IS USED. FOR OTHER TYPES OF PIPE THE SEWER SHALL BE GROUTED IN PLACE WITH NON-SHRINK GROUT. THE SEWER PIPE SHALL BE SUPPORTED WITH CONCRETE ENCASEMENT A MINIMUM OF 3 FEET FROM THE MANHOLE WALL AND TO THE FIRST JOINT FOR V.C.P. SUCH THAT THE JOINT REMAINS FLEXIBLE.
4. ALL INSIDE SURFACES OF THE CONCRETE MANHOLE WHICH WOULD BE EXPOSED TO SEWER GAS SHALL BE COATED WITH 2 COATS TNEMEC SERIES 66 HI-BUILD EPOXOLINE, DRY THICKNESS OF 8 MILS (MIN.)
5. EXTERIOR MANHOLE WALLS SHALL BE COATED WITH 1 COAT MOBILARMA 633 BITUMINOUS COATING.
6. JOINT SEALING COMPOUND SHALL BE KENT SEAL NO. 2 OR APPROVED EQUAL.
7. PRECAST MANHOLES SHALL BE SET AT LEAST 4 INCHES INTO THE MANHOLE BASE.
8. TOP OF MANHOLE FLOOR SLAB SHALL BE AT LEAST 3 INCHES BELOW THE FLOW LINE OF THE OUTLET PIPE TO INSURE SUFFICIENT MINIMUM THICKNESS OF SHAPED INVERT.
9. LIFTING HOLES SHALL BE FILLED WITH NON-SHRINK GROUT AND THE INTERIOR SURFACE COATED AS SPECIFIED.
10. MORTAR USED IN MASONRY CONSTRUCTION SHALL CONTAIN 8 SACKS OF CEMENT PER CUBIC YARD. CONCRETE USED IN MANHOLE BASES SHALL CONFORM TO THE REQUIREMENTS OF CONCRETE FOR CONCRETE PAVEMENT CONSTRUCTION AS SPECIFIED IN THE CITY STANDARD PAVING SPECIFICATIONS USING CITY CONCRETE PAVEMENT MIX WITHOUT AIR ENTRAINING ADMIXTURE. MORTAR SHALL BE PLACED AROUND THE MANHOLE RING AS SHOWN ON THE DRAWINGS WHEN MANHOLES ARE CONSTRUCTED IN UNPAVED AREAS. MANHOLES CONSTRUCTED WHERE PIPE SIZES ARE SMALLER THAN 24" SHALL HAVE AN INSIDE DIAMETER OF 4'. MANHOLES CONSTRUCTED WHERE PIPE SIZES ARE 24" OR LARGER SHALL HAVE AN INSIDE DIAMETER OF 5'. COMPLETED MANHOLE SHALL BE WITHOUT LEAKS AND WATER TIGHT.
11. REINFORCING STEEL SHALL BE INSTALLED IN THE MANHOLE BASES AND SHALL CONSIST OF NO. 4 BARS PLACED ON 5" CENTERS IN BOTH DIRECTIONS. THE MANHOLE BASE REINFORCEMENT SHALL BE PLACED AT LEAST 3" ABOVE THE BOTTOM OF THE MANHOLE BASE. ALL COSTS FOR FURNISHING AND INSTALLING REINFORCING STEEL SHALL BE INCLUDED IN THE UNIT PRICE BID FOR THE MANHOLE.
12. OPENINGS SHALL BE CUT INTO THE MANHOLE WALL WHEN OUTSIDE DROPS ARE CONSTRUCTED ON EXISTING MANHOLES. SUCH OPENINGS CUT INTO EXISTING MANHOLES SHALL BE AS SMALL AS PRACTICAL TO FACILITATE INSTALLING AND GROUTING THE NEW PIPE IN PLACE. WATERSTOP GASKETS SHALL BE USED WITH P.V.C. AND A.B.S. COMPOSITE PIPE. THE NEW PIPE SHALL BE GROUTED INTO THE OPENING USING AN APPROVED NONSHRINK GROUT FOR THE FULL MANHOLE WALL THICKNESS. THE EXTERIOR OF THE COMPLETED CONNECTION SHALL BE SEALED WITH AN APPROVED BITUMINOUS COATING SUCH THAT THE CONNECTION WILL BE WATER TIGHT. FLOOR OF MANHOLE SHALL BE MODIFIED TO FORM NEW FLOW CHANNEL FOR THE NEW CONNECTION AS INDICATED BY THE DRAWING. THIS WORK, INCLUDING MODIFICATION OF MANHOLE FLOOR, SHALL BE PAID FOR AT THE UNIT PRICE BID FOR OUTSIDE DROP STACK CONSTRUCTED ON EXISTING MANHOLE.
13. THE FLOORS OF ALL MANHOLES SHALL BE SHAPED WITH FLOW CHANNELS SUCH THAT THE MANHOLES WILL BE SELF CLEANING AND FREE OF AREAS WHERE SOLIDS COULD BE DEPOSITED AS SEWAGE FLOWS THROUGH THE MANHOLE FROM ALL INLET PIPES TO THE OUTLET PIPE. FLOW CHANNELS SHALL BE FORMED TO MATCH THE BOTTOM HALVES OF THE INFLOWING PIPES AND THE OUTFLOWING PIPE AS SHOWN BY THE DRAWINGS EXCEPT FOR INSIDE DROP MANHOLES. FLOW CHANNELS FOR INSIDE DROP MANHOLES SHALL BE CONSTRUCTED AS INDICATED BY THE DRAWING. MANHOLE FLOORS SHALL HAVE SLOPES OF 3 INCHES PER FOOT IN THE AREAS OUTSIDE OF THE FLOW CHANNELS SLOPED TOWARD THE FLOW CHANNELS. PIPES LAID THROUGH MANHOLES SHALL HAVE THE TOP HALF REMOVED TO NEAT LINES FOR THE FULL INSIDE DIAMETER OF THE MANHOLE. MANHOLE FLOORS SHALL THEN BE SHAPED AROUND THE BOTTOM HALF OF THE PIPE WHICH FORMS THE FLOW CHANNEL.
14. PIPES INSTALLED WITHIN THE EXCAVATION MADE FOR THE MANHOLE SHALL BE CRADLED WITH CONCRETE TO THE LIMITS OF THE MANHOLE EXCAVATION. WHEN CLAY PIPE IS USED, THE CRADLE SHALL EXTEND TO THE FIRST JOINT OUTSIDE THE MANHOLE. THE CRADLE SHALL BE TERMINATED AT THE CLAY PIPE JOINT IN A MANNER WHICH WILL MAINTAIN THE FLEXIBILITY OF THE JOINT. COST OF CRADLE WITHIN MANHOLE EXCAVATION OR TO CLAY PIPE JOINTS ADJACENT TO MANHOLE SHALL BE INCLUDED IN THE UNIT PRICE BID FOR THE MANHOLE.
15. MANHOLE COVER CASTINGS AND MANHOLE FRAME CASTINGS SHALL CONFORM TO THE REQUIREMENTS AS INDICATED IN THE STANDARD SPECIFICATIONS AND AS SHOWN IN THE STANDARD DETAIL DRAWING.
16. THE VERTICAL DROP IN INSIDE DROP MANHOLES SHALL NOT EXCEED 2' FOR INFLOWING PIPES SIZED 12" OR SMALLER AND 2' FOR INFLOWING PIPES LARGER THAN 12". THE CROWNS OF INFLOWING PIPES SHALL NEVER BE SET LOWER THAN THE CROWN OF THE OUTFLOWING PIPE.
17. STANDARD MANHOLES AND STANDARD INSIDE DROP MANHOLES SHALL BE BID AS STANDARD MANHOLES FOR THE TYPE AND DIAMETER INDICATED. OUTSIDE DROP MANHOLES SHALL BE BID AS STANDARD OUTSIDE DROP MANHOLES FOR THE TYPE AND DIAMETER INDICATED. ALL MANHOLE DIAMETERS WILL BE 4' UNLESS INDICATED OTHERWISE.
18. A BRICK MASONRY COLLAR SHALL BE INSTALLED BETWEEN THE CAST IRON FRAME AND THE CONCENTRIC CONE. THE COLLAR WILL HAVE 8" WALLS AND A VERTICAL HEIGHT OF 6" MINIMUM AND 18" MAXIMUM. A 1" COAT OF MORTAR WILL BE PLASTERED ON THE OUTSIDE OF THE COLLAR. THE USE OF PRE-CAST CONCRETE SPACERS FOR MANHOLE TOP ADJUSTMENT IS ALSO ALLOWED.
19. ALL MANHOLE BASE CONSTRUCTION THAT OCCURS IN THE FIELD MUST HAVE A MINIMUM OF EIGHT INCHES OF CONCRETE BELOW THE MANHOLE WALL AND THE WALL SECTION SHOULD EXTEND FOUR INCHES INTO THE BASE RESULTING IN A MINIMUM TOTAL BASE THICKNESS OF 12 INCHES. MONOLITHIC BASE SECTIONS CONSTRUCTED IN THE FACTORY AND CURED AS PER ASTM C478 MUST HAVE A MINIMUM EIGHT INCH THICK CONCRETE BASE. BASE SECTIONS CONSTRUCTED IN THE FACTORY UTILIZING A PREVIOUSLY MANUFACTURED MANHOLE WALL SECTION, AS OUTLINED IN THE ABOVE PARAGRAPH, MUST HAVE A MINIMUM BASE THICKNESS OF EIGHT INCHES WITH THE WALL SECTION EXTENDING FOUR INCHES INTO THE BASE AND BE MANUFACTURED IN COMPLIANCE WITH ASTM C478.

SECTION X
(TYPICAL)

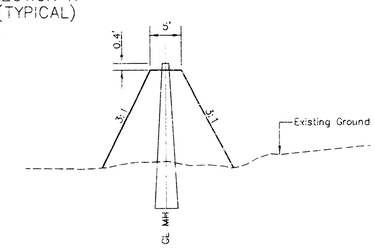

PROTECTIVE FILL AT MH

MINIMUM PROTECTIVE FILL SHALL BE PROVIDED IN ALL INSTANCES WHERE MH TOP IS GREATER THAN 0.4' ABOVE EXISTING GROUND. (COST SUBSIDIARY TO MH INSTALLATION) (TYPICAL ALL SHEETS)

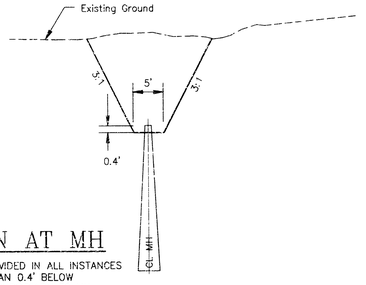

EXCAVATION AT MH

EXCAVATION SHALL BE PROVIDED IN ALL INSTANCES WHERE MH TOP IS LESS THAN 0.4' BELOW EXISTING GROUND. (COST SUBSIDIARY TO MH INSTALLATION). (TYPICAL ALL SHEETS)

GREAT PLAINS BUSINESS PARK 3rd ADDITION
LOT 1, BLOCK 3, SANITARY SEWER EXTENSION
TYPE "P" MANHOLE DETAIL
CITY OF WICHITA, KANSAS
JAMES ARAGON, P.E. CITY ENGINEER
PROJECT NO. 1520-1PS INDEX CODE 867881

POE & ASSOCIATES OF KANSAS, INC.
CONSULTING ENGINEERS
3840 E. Central, Suite 206 ■ Wichita, KS 67208-4342
Phone (316) 681-4114 ■ FAX (316) 687-4441

FINAL

Designed By: J. Short
Drawn By: J. Short
Proj. Job No.: 1574C
Date: September 2005

Sheet 3 of 6

VERTICAL RISER DETAILS

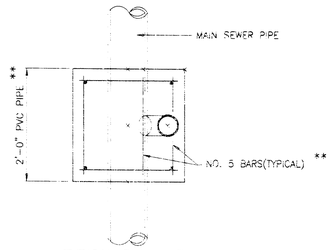

TYPICAL PLAN VIEW

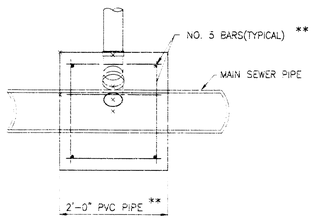

TYPICAL SECTION X-X

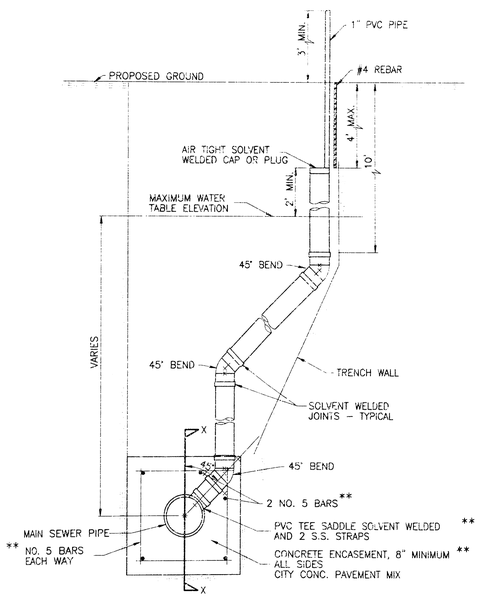

METHOD "A"
(Deeper than 12 feet)

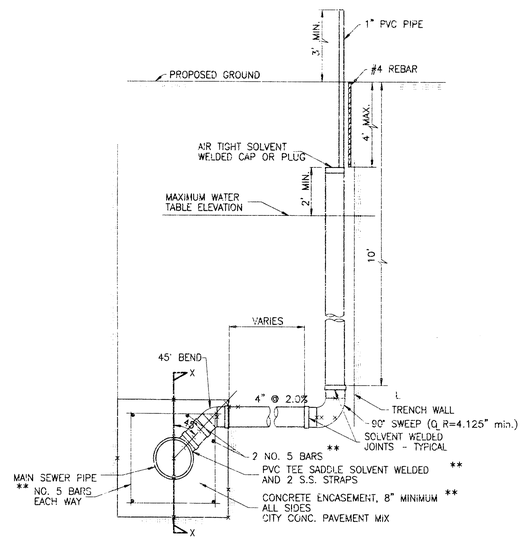

METHOD "B"
(Extension under proposed street)

** Reinforced Concrete Encasement only where 10' or more below proposed ground.

NOTE: RISER PIPE REQUIREMENTS AT MANHOLE STUBS SHALL BE SIMILAR TO THOSE SHOWN ABOVE.

GENERAL NOTES

1. RISERS. Risers shall be installed to serve all lots or tracts where the sanitary sewer main is below the water table. Risers shall also be installed to serve all lots and tracts where the sanitary sewer main depth is greater than 12 feet below the proposed ground elevation and to extend across the proposed road. Installation of risers because of field conditions shall be as approved by the Construction Engineer. The location of the risers to serve developed property shall be approved by the property owner and the Construction Engineer.

2. PIPE STUBS. Pipe stubs shall be installed in manholes where locations of manholes will provide satisfactory service connection as determined by the Construction Engineer. The vertical distance between the flowline of the manhole pipe stub and the flowline of the sanitary sewer main out of the manhole shall not exceed 2 feet. Risers shall be utilized at manhole pipe stubs as indicated in Note 1. Manhole pipe stubs shall be set such that the top of the stub is not lower than the top of the sanitary sewer main.

3. SIZING. Pipe stubs and risers shall be sized according to the plans and riser table where risers are indicated by the plans. Where risers or pipe stubs are required because of field conditions, the risers and stubs shall be six-inch diameter for commercial or industrial properties and 4" or 6" diameter for residential properties, based on lot size and sanitary sewer main depth. Sizing of risers and stubs shall be approved by the Construction Engineer prior to installation.

4. RISER OR STUB MATERIAL. Risers and stubs shall be constructed of Schedule 40 PVC Pipe, meeting the requirements of the latest revision of A.S.T.M. . All pipe joints shall be solvent welded.

5. REINFORCED CONCRETE ENCASEMENT. Riser connections to PVC Sanitary Sewer mains shall be reinforced concrete encased one foot each way from the riser centerline. The concrete encasement shall be reinforced using reinforcing steel as shown in the appropriate drawing. The concrete shall conform to the City Standard Specifications for concrete pavement.

6. BEDDING. Bedding around the sanitary sewer riser shall be compacted Pipe Bedding Type 1 or 2. The bedding shall be placed and compacted from the depth of the sanitary sewer main to the top of the sanitary sewer riser pipe. Compacted Pipe Bedding Type 1 or 2 shall be required for all risers whether constructed in vertical wall or sloped wall trenches. Bedding material and construction practices shall be approved by the Construction Engineer prior to installation.

7. SUPPORT OF RISERS. Sanitary sewer riser pipe shall be supported during trench backfill. The riser pipe shall be held in a vertical position at all times until trench backfill and compaction has been completed. Contractor's methods for supporting and backfilling the riser pipe shall be approved by the Construction Engineer.

8. PLUGGING. The ends of the riser pipes and manhole stubs shall be plugged using an airtight solvent welded cap or plug. Cap or plug fittings shall be approved by the Construction Engineer prior to installation. Caps or plugs which do not provide an airtight seal will not be accepted.

9. TOP OF THE RISER PIPE. The top elevation of the sanitary sewer riser pipe shall be built per plan elevations, unless otherwise directed by the Construction Engineer. Where riser elevations are not shown on the plans, the top of the risers shall be set at an elevation four feet below the proposed ground surface. If ground water is encountered, the top of the riser pipe shall be set at an elevation two feet (min.) above the maximum water table elevation, regardless of the riser elevation shown on the plans.

10. MARKING. Locations of the ends of the sanitary sewer riser pipe shall be marked by 1" PVC pipe extending from the top of the riser pipe to a minimum of 3 feet above the proposed ground. A #4 rebar shall be placed to a depth of 4 feet next to the 1" PVC pipe. The #4 rebar shall be flush with the proposed ground.

11. LOCATION MEASURES. The project inspector shall record and document the location of all risers constructed as measured from the nearest manhole, indicating the direction from the manhole, the direction and distance from the main, riser size, and elevation of the top of the riser.

12. RISER LOCATION. The riser shall be located per plan if shown. If not shown on the plan, the riser shall be located at the center of the lot, within one foot of the front property line for the lot being served. All riser locations shall be approved by the Construction Engineer prior to installation.

13. PAYMENT. "Sanitary sewer risers" shall be paid for at the contract unit price per each, which price shall be full compensation for all pipe, fittings, rebar, reinforced concrete encasement, support during backfill, backfill, labor, site restoration, and any other items necessary to complete the work.

Stub Installed

SANITARY SEWER RISER SUMMARY

No.	Line	Sta./Dir.	Lot No.	Block No.	Wye or Saddle Size	8" Main Ft.	Information Only Approx. Length 4" Pipe Vert.	Information Only Approx. Length 4" Pipe Horiz.	Coordinates at End of 4" Pipe Northing	Coordinates at End of 4" Pipe Easting	Record Information (To Be Completed By Inspector) Top Riser Elev. Proposed/Actual	Record Information (To Be Completed By Inspector) Distance from Nearest Manhole Upstream	Record Information (To Be Completed By Inspector) Distance from Nearest Manhole Downstream
1	1	1+15.63 Rt.	1	3	8"x4"	1292.86	7'	22'	9329.446	9482.489	1300.4/		

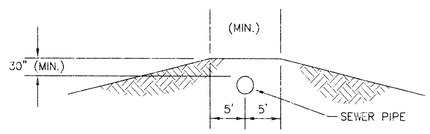

PROTECTIVE FILL DETAIL

MINIMUM PROTECTIVE FILL SHALL BE PROVIDED IN ALL INSTANCES WHERE COVER OVER THE PROP. SEWER LINE IS LESS THAN 30". (COST SUBSIDIARY TO PIPE INSTALLATION)

GREAT PLAINS BUSINESS PARK 3rd ADDITION
LOT 1, BLOCK 3, SANITARY SEWER EXTENSION
RISER DETAILS
CITY OF WICHITA, KANSAS
JAMES ARNOLD, P.E. - CITY ENGINEER
PROJECT NO. 1592-4-FS INDEX CODE 617801

POE & ASSOCIATES OF KANSAS, INC.
CONSULTING ENGINEERS
3940 E. Central, Suite 200 ■ Wichita, KS 67208-4242
Phone: 316/683-4111 ■ FAX 316/683-4444

FINAL

Designed By: J. Ubert
Drawn By: J. Ubert
Poe Job No. 1674C
Date: September 2005

Sheet 4 of 5

SCALE 1"=150'

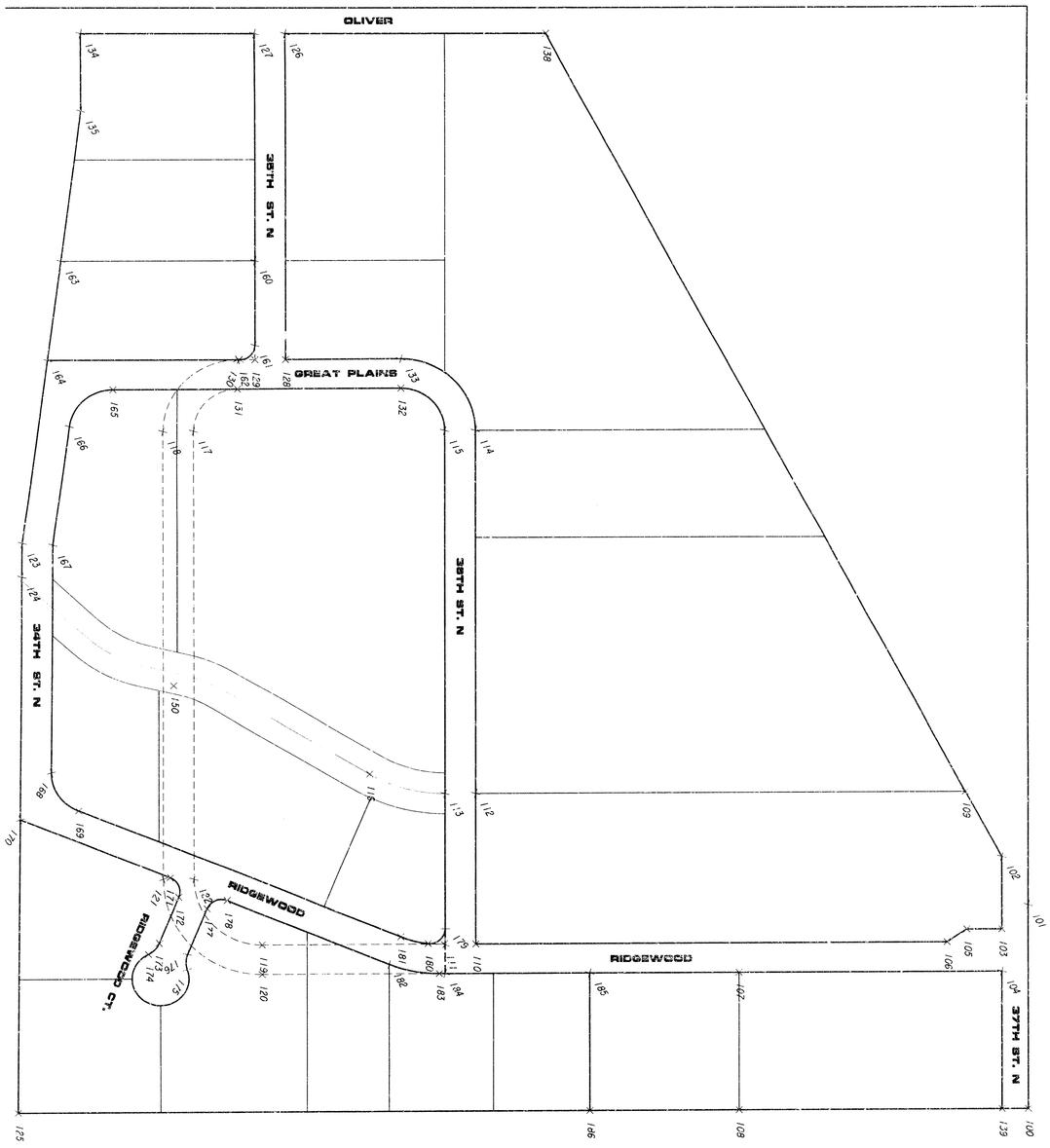

PNT.	NORTHING	EASTING
100	8000.002	4000.004
101	8000.373	3512.904
102	7940.460	3398.750
103	7940.329	3370.054
104	7940.253	3370.054
105	7860.330	3370.122
106	7815.307	3600.166
107	7340.233	3670.563
108	7340.002	4000.564
109	7857.206	3240.124
110	5739.545	3601.073
111	6669.544	3601.132
112	6739.899	3241.085
113	6669.897	3241.132
114	6740.748	2371.960
115	6670.748	2371.892
116	6497.773	3193.700
117	6096.737	2371.794
118	6026.737	2371.794
119	6251.869	3601.487
120	6251.928	3671.487
121	6026.737	3446.487
122	6096.737	3446.487
123	5706.008	2642.136
124	5705.356	2722.133
125	5694.926	4001.959
126	6306.737	1421.794
127	6236.737	1421.794
128	6306.737	2201.794
129	6236.737	2201.794
130	6196.737	2201.794
131	6196.737	2271.794
132	6570.748	2271.794
133	6570.748	2201.794
134	5840.957	1421.794
135	5839.474	1603.758
138	6902.868	1421.794
139	7940.001	4000.055
150	6050.652	2383.320
160	6236.737	1961.794
161	6236.737	2166.794
162	6201.737	2201.794
163	5793.455	1961.794
164	5762.607	2201.794
165	5912.156	2271.794
166	5812.971	2359.046
167	5775.973	2646.900
168	5771.566	3187.706
169	5833.463	3280.979
170	5700.632	3301.954
171	6042.726	3442.920
172	6061.752	3488.615
173	6017.199	3598.736
174	5992.307	3622.905
175	6081.148	3659.513
176	6081.919	3623.405
177	6126.472	3515.285
178	6172.167	3496.259
179	6669.579	3565.002
180	6630.742	3599.757
181	6568.332	3583.797
182	6541.664	3648.518
183	6656.216	3671.144
184	6669.475	3671.133
185	6999.474	3670.853
186	6999.152	4000.853

Great Plains 3rd Addition

Plat Stake Out

New points for 3rd Add.
are 160-186

FINAL	
Designed By:	J. Ubert / B. Kulla
Drawn By:	B. Kulla
Poe Job No.:	16742
Date:	September 2005
Sheet	5 of 6

POE & ASSOCIATES OF KANSAS, INC.
CONSULTING ENGINEERS
5940 E. Central, Suite 200 ■ Wichita, KS 67208-4242
Phone 316 685-4114 ■ FAX 316 685-4444

GREAT PLAINS BUSINESS PARK 3rd ADDITION
PRIVATE SANITARY SEWER TO SERVE LOT 1, BLOCK 3
COORDINATE POINTS LIST
CITY OF WICHITA, KANSAS
JAMES ARMOUR, P.E. - CITY ENGINEER
C.O.W. PROJECT NO. 1596 PIPS O.C.A. NO. 667861

No.	Date	By	Approved	Revision
1				
2				
3				
4				

PC 136-10A

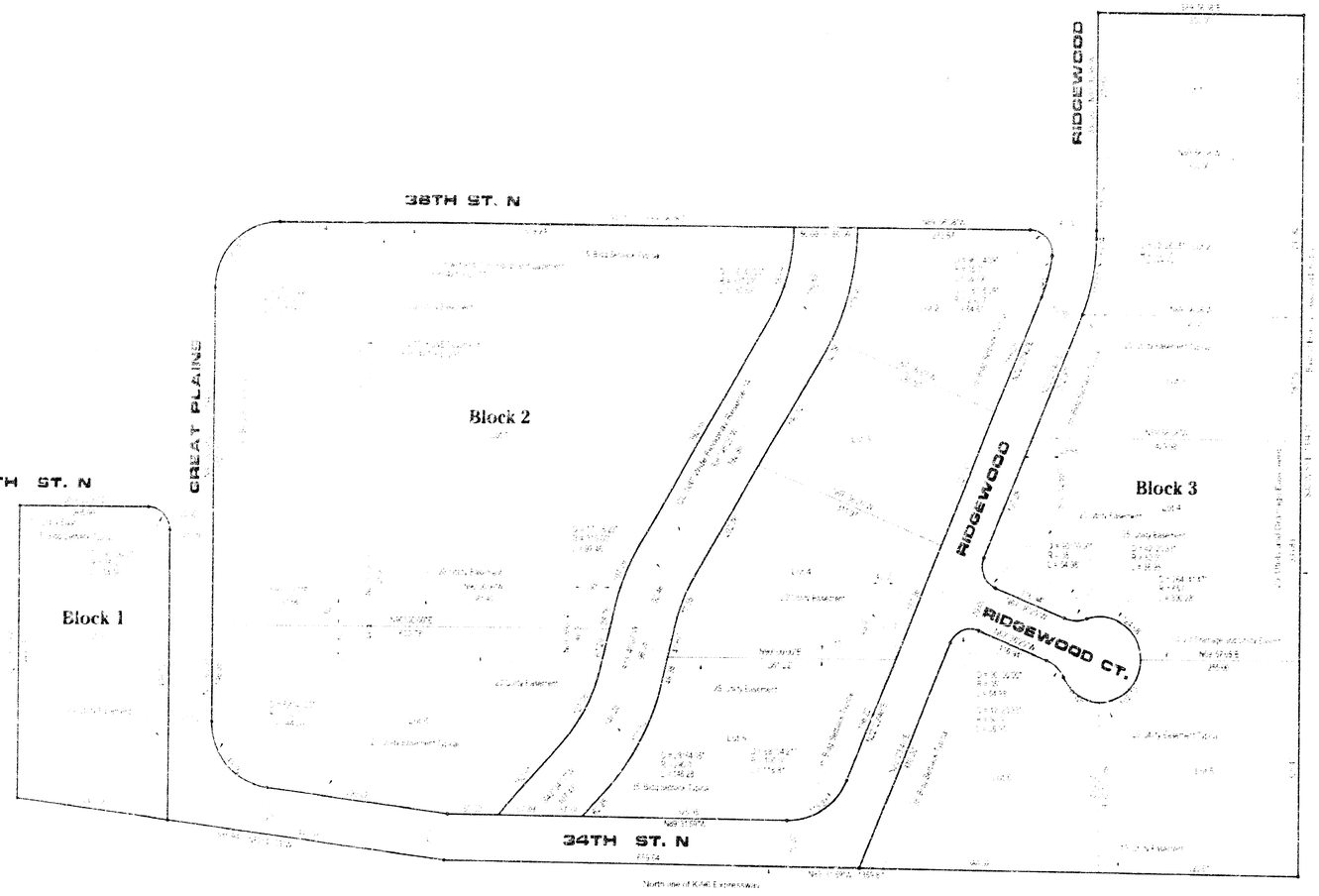

Great Plains Business Park 3rd Addition

to Wichita-Sedgwick County, Kansas

5/21/02

Sheet 1 of 2

PC 136-10A