STORM SEWER PLANS FOR
BENT TREE
S.W.S. NO. 257
PROJECT NO.
468-76-245-81310-000-000-001

CITY OF WICHITA, KANSAS

MIKE LINDEBAK, CITY ENGINEER

NOVEMBER, 1983

GENERAL NOTES

1. The Contractor shall be responsible for preserving property irons. The Contractor shall be required to re-establish any property irons which are damaged or destroyed by his construction operations. Such irons shall be re-established by a licensed land surveyor or a licensed professional engineer in accordance with state laws.

2. The tops of inlets and manholes as noted on the plans may vary so as to meet proposed top of curb elevations or pavement elevations. The Field Engineer shall locate inlets and manholes with reference to proposed paving plans of the pertinent streets.

3. All concrete shall be Standard Paving Mix unless otherwise noted.

4. The riprap for this project shall by type 3. The type 3 riprap shall be 12" riprap. The rock for riprap and gravel protection shall be hard, dense, durable and shall be reasonably well graded. The size range of rock used shall be a maximum of one cubic foot and a minimum of 1 1/2".

5. Contractor shall avoid uncovering existing water lines unless absolutely necessary. Uncovering shall be done only in the presence of a Water Department Engineer.

BENCH MARK

"□" Cut End Curb N.E. Cor. 21 St & Greenleaf
EL.EV. = 206.43

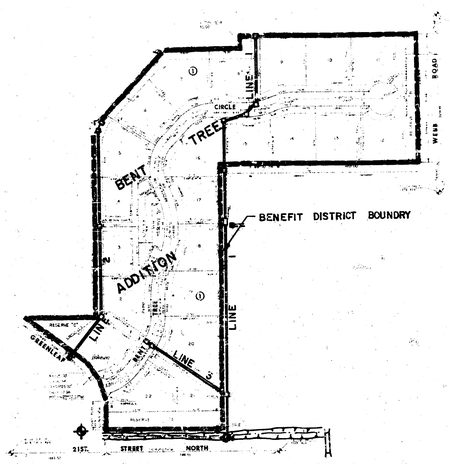

N

SCALE: 1" = 150'

INDEX TO DRAWINGS

SHEET NO.	DESCRIPTION
1	TITLE SHEET
2-3	LINE 1
4-5	LINE 2
6	LINE 3
7	DITCH & AREA INLET DETAILS
8	CURB INLET DETAILS
9	MANHOLE DETAILS
10	FINAL PLAT

As Builts
8/84
MC Greene

MICHAEL D. HARDING
LICENSED
9399
KANSAS
PROFESSIONAL ENGINEER

MK EC

BENT TREE
STORM WATER SEWER

Design AMS
Drawn by ALL
Checked by KHB
Date NOV. 1983
Job no

MID-KANSAS ENGINEERING CONSULTANTS PA
240 NORTH ROCK ROAD
SUITE 130
WICHITA, KANSAS 67206
682-6561

1/10

Sheet 1 of 10

FILMED FROM THE BEST
AVAILABLE COPY

BENT TREE
S.W.S. NO. 257
PROJ. NO. 468-76-245-81310-000-000-001

N

Scale: 1" = 20' Horiz.
1" = 5' Vert.

NOTE:
REGRADE EXISTING DITCH 235'± COST SUBSIDARY TO PROJECT

21 ST. STREET NORTH

Existing Ditch #6

Exist. 24.0'

Pave

RESERVE "A"

LOT 21

LOT 20

LOT 19

LOT 18

Min. 12" Fill Over Pipe

Exist. Ditch

12"

3:1

3.12'

20' Utility Esmt.

20'

Install 25 S.Y. Type III Rip-Rap

Existing 8" Sanitary Sewer

Prop. San. Sewer

Existing 20" P.C.C.P. Reservoir Fill Line

Sta. 1+03 Line 1 = Sta. 0+00 Line 3
Const. Std. Area Inlet 4X2
Top. Elev. = 203.3

Sta. 0+00 Line 1
Install 24" End Section

10' Esmt By Separate Instrument

20' Utility Esmt.

Sta. 4+3. 1 Line 1
Const. Area Inlet 4X2
With 6' Opening @ East Side
Top Elev. = 207.00
See Detail Sheet

Const 6" Conc. Flume
See Detail Sheet

F.F. = 209.78 ± 1

Note: HEADWALL

Contractor to use excavation from project as fill and borrow material where necessary. Cost is subsidiary to project.

As Built Plan
8/18/94
McGregor

PLAN - LINE 1

PROFILE - LINE 1

Sta. 0+00 ℄ Exist. Ditch

Sta. 0+21 Line 1
Install 24" End Section

Sta. 1+03 Line 1 = Sta. 0+00 Line 3
Const. Area Inlet 4X2
Top Elev. = 203.3

Sta. 4+36.1 Line 1
Const. Area Inlet 4X2
Top Elev. = 207.00

Exist. Pavmt.

Existing Ground

1'-0" Min. Fill Over Pipe

Install 25 S.Y. Type III Rip-Rap

21'

82± L.F. 24" @ 0.32% + End Section

334.0
322± L.F. 24" R.C.P. @ 0.40%

205
200
195

0
1
2
3
4

2/10

M.K.E.C.

FILMED FROM THE BEST COPY AVAILABLE

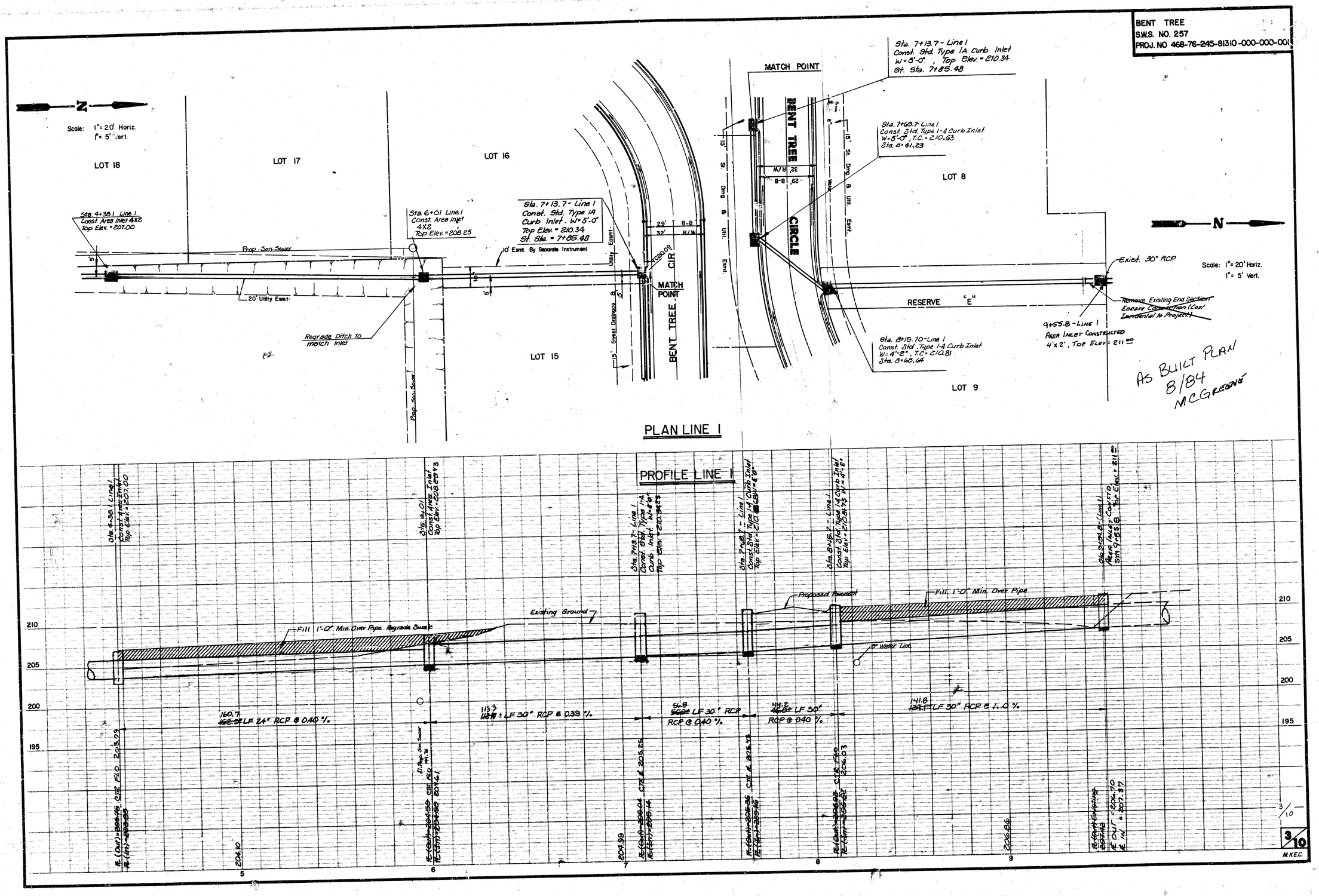
BENT TREE
S.W.S. NO. 257
PROJ. NO 468-76-245-81310-000-000-001
Scale: 1"= 20' Horiz.
1"= 5' Vert.
LOT 18
LOT 17
LOT 16
LOT 15
LOT 8
LOT 9
Sta. 4+38.1 Line 1
Const. Area Inlet 4X2
Top Elev. = 207.00
Sta. 6+01 Line 1
Const. Area Inlet
4X2
Top Elev. = 208.25
Sta. 7+13.7 - Line 1
Const. Std. Type 1A
Curb Inlet. W=5'-0"
Top Elev. = 210.34
St. Sta. = 7+85.48
Prop. San. Sewer
20' Utility Esmt.
10' Esmt. By Separate Instrument
Regrade Ditch to match Inlet
15' Street Drainage & Utility Esmt.
MATCH POINT
BENT TREE CIR.
BENT TREE CIRCLE
15' St. Drng. & Util. Esmt.
Sta. 7+13.7 - Line 1
Const. Std. Type 1A Curb Inlet
W=5'-0", Top Elev. = 210.34
St. Sta. 7+85.48
Sta. 7+69.7 - Line 1
Const. Std. Type 1-A Curb Inlet
W=5'-0", T.C. = 210.63
Sta. 8+41.23
Sta. 8+15.70 - Line 1
Const. Std. Type 1-A Curb Inlet
W=4'-2", T.C. = 210.81
Sta. 8+68.64
Exist. 30" RCP
Remove Existing End Section
Encase Connection (Cost Incidental to Project)
9+55.8 - Line 1
Area Inlet Constructed
4'x2', Top Elev. = 211.00
RESERVE "E"
Scale: 1"= 20' Horiz.
1"= 5' Vert.
As Built Plan
8/84
McGreene
PLAN LINE 1
PROFILE LINE 1
Existing Ground
Proposed Pavement
Fill 1'-0" Min. Over Pipe
Fill 1'-0" Min. Over Pipe Regrade Swale
8" Water Line
160.7 LF 24" RCP @ 0.40 %
113.3 LF 30" RCP @ 0.39 %
56.8 LF 30" RCP @ 0.40 %
44.2 LF 30" RCP @ 0.40 %
141.8 LF 30" RCP @ 1.0 %
210
205
200
195
204.10
204.99
206.86
5
6
7
8
9
3/10
M.K.E.C.

BENT TREE
SWS. NO. 257
PROJ. NO. 468-76-245-81310 -000-000-001

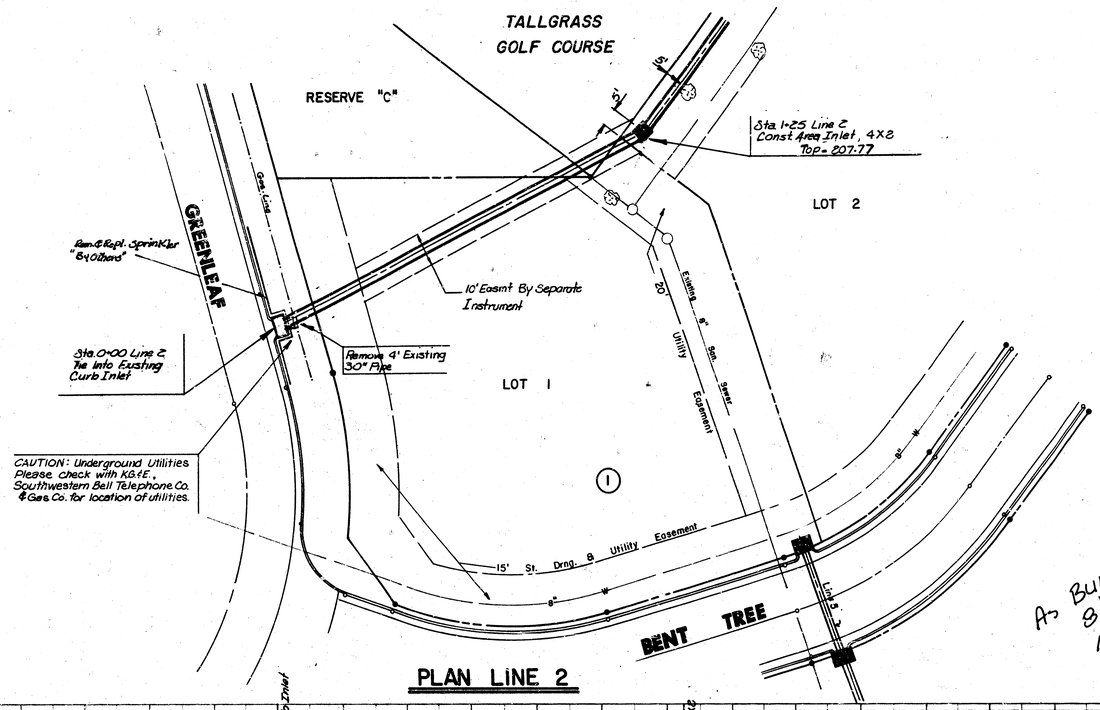

Scale: 1" = 20' Horiz.
1" = 5' Vert.

As Built Plan
3/94
M.C. Greene

PLAN LINE 2

PROFILE LINE 2

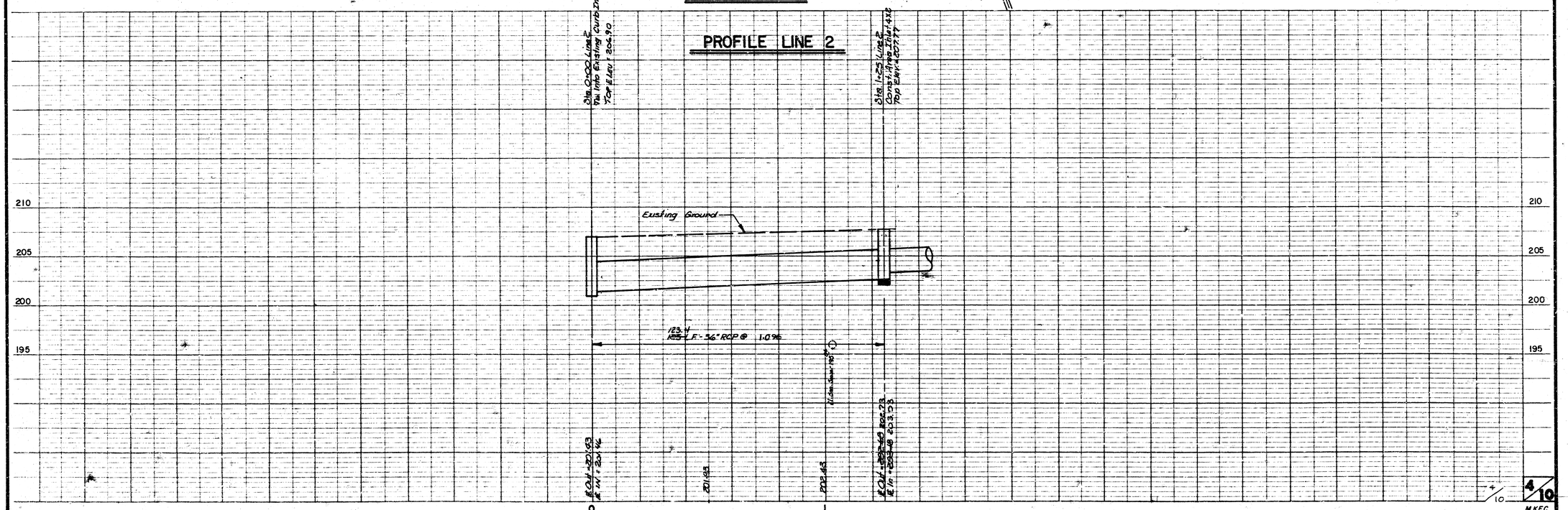

4/10

M.K.E.C.

BENT TREE
S.W.S. NO. 257
PROJ. NO. 468-76-245-81310-000-000-001

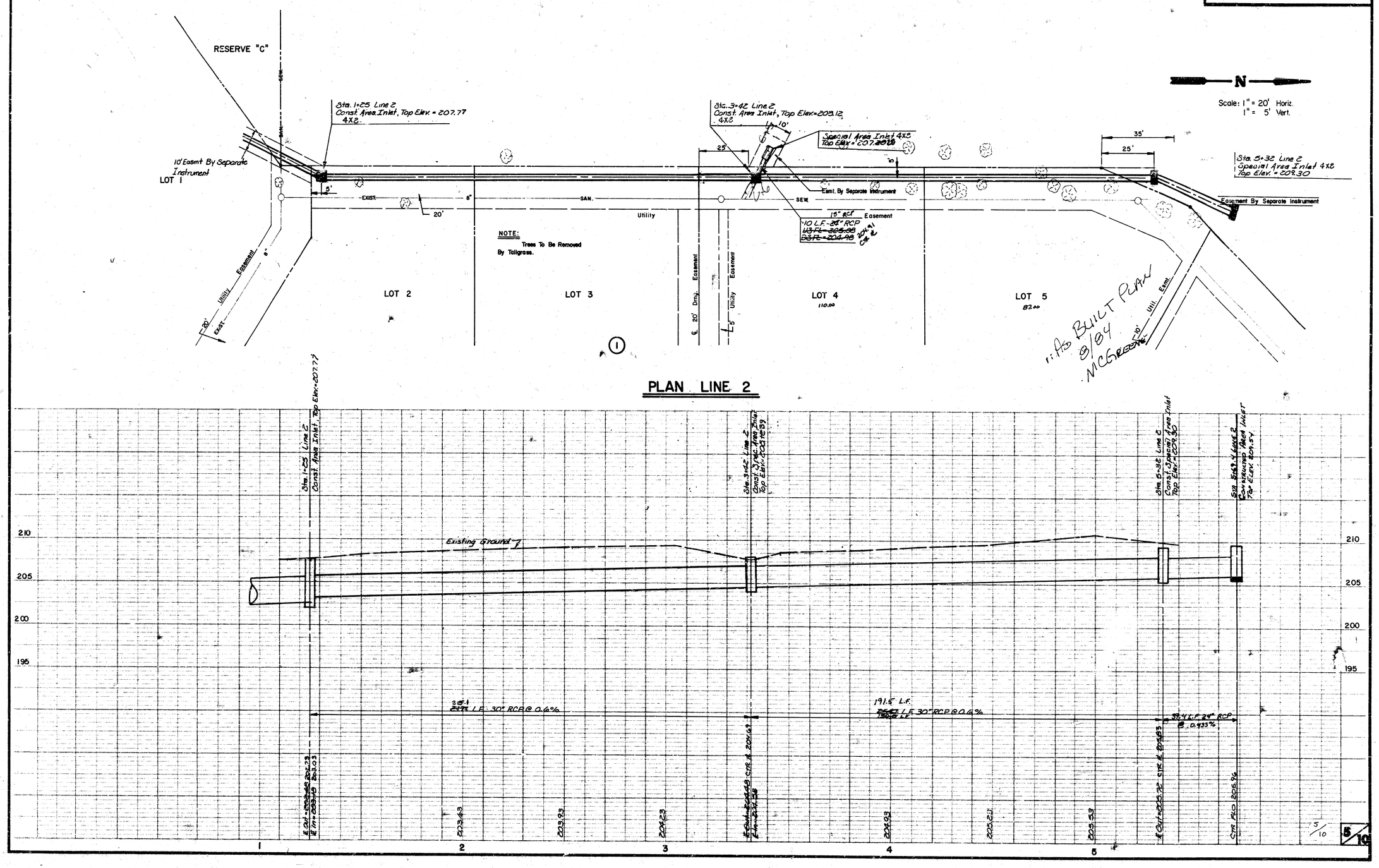

BENT TREE
S.W.S. NO. 257
PROJ. NO. 468-76-245-81310 -000-000-001

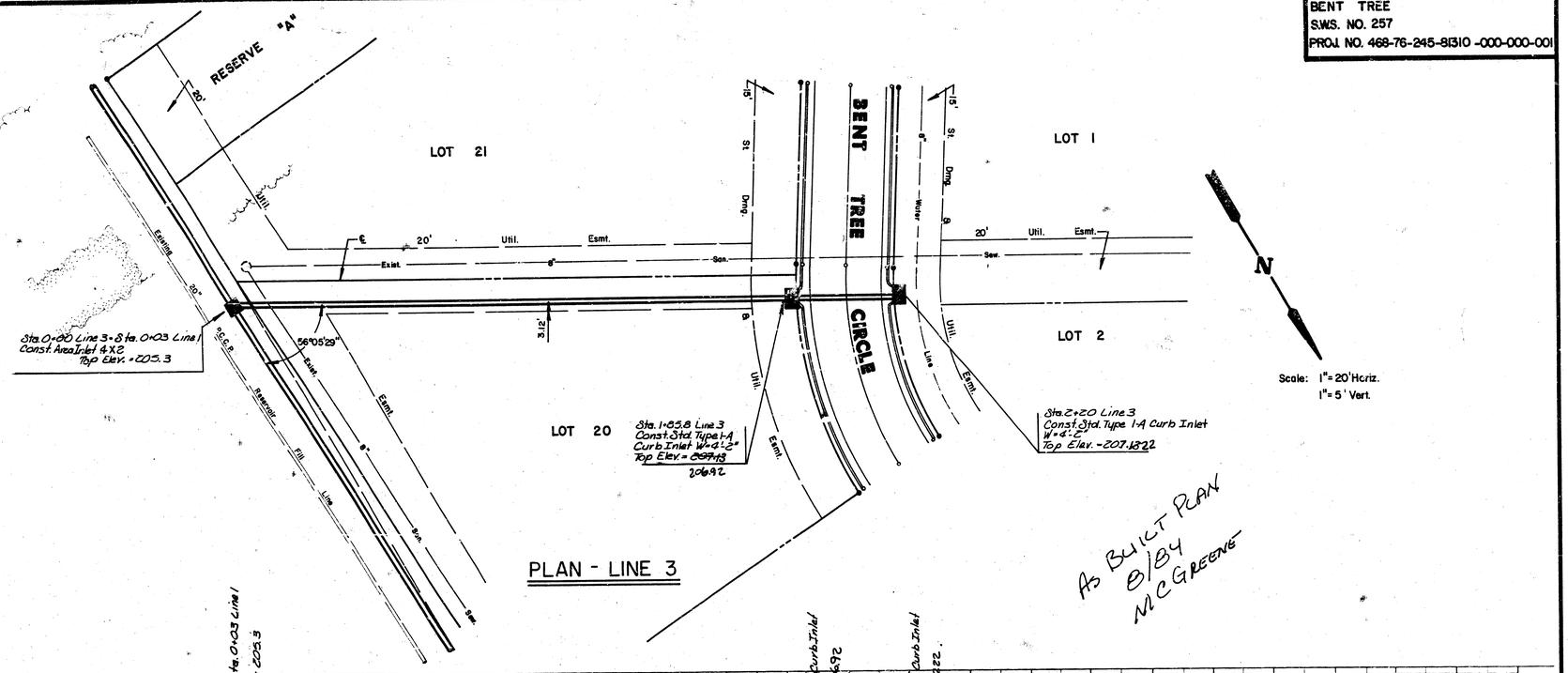

PLAN - LINE 3

As Built Plan
8/84
M C Greene

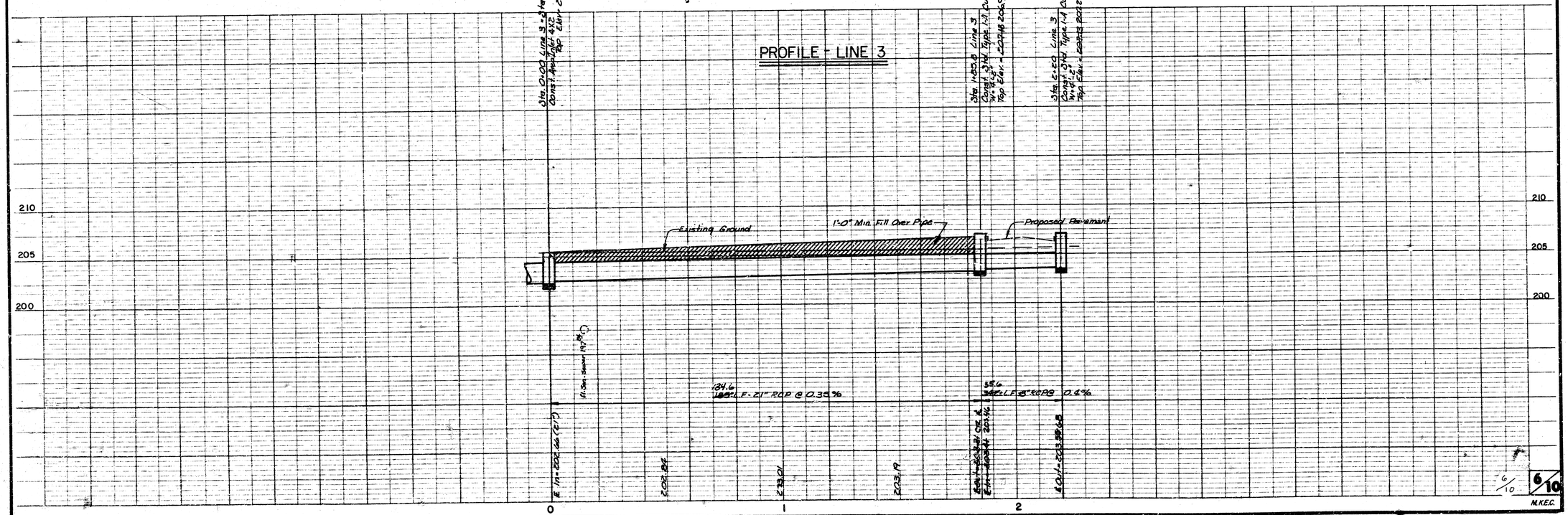

NOTE: Grates shall be imprinted on the top surface with "CITY OF WICHITA" using letters at least 1" in height. Other marking methods may be used only if approved by the engineer.

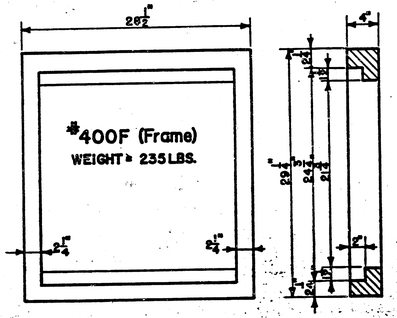

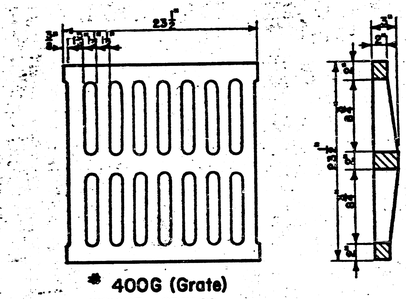

24"x24" Frame & Grate Detail

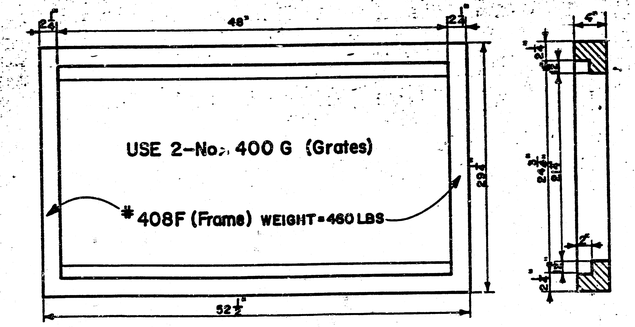

Double 24"x24" Frame Detail

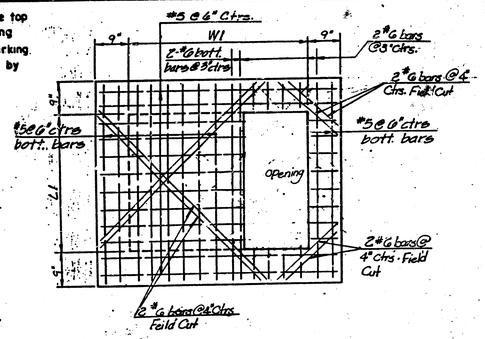

TOP SLAB REINFORCING

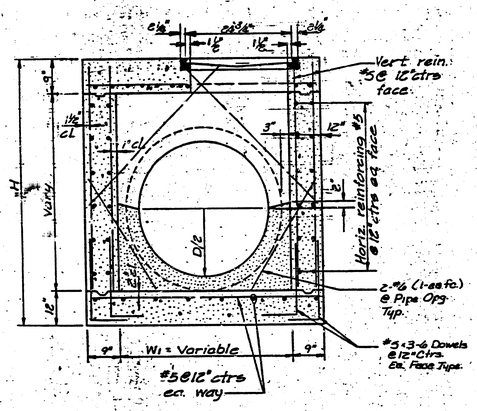

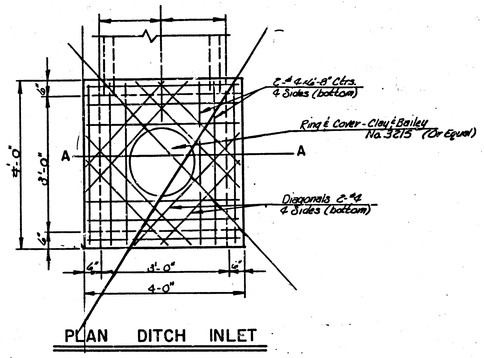

PLAN DITCH INLET

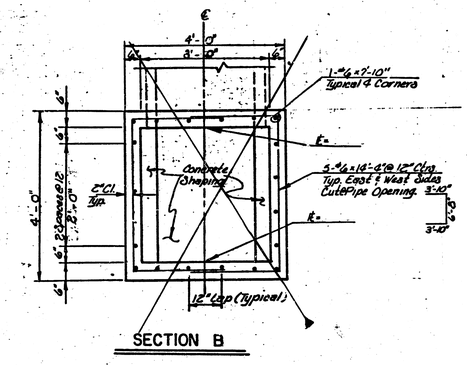

SECTION B

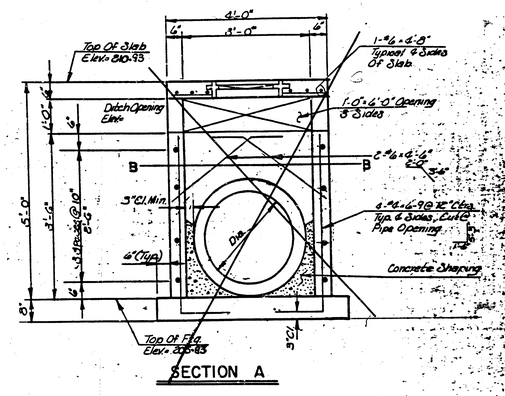

SECTION A

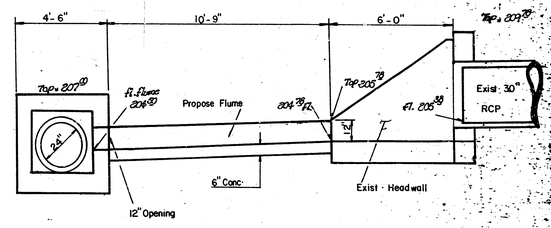

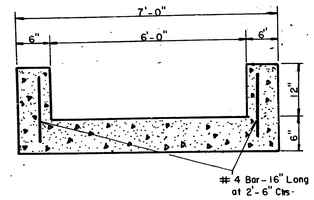

6" Concrete Flume Detail

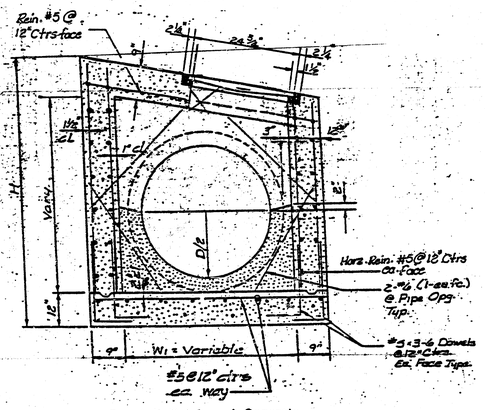

Special Reinforced Concrete Area Inlet

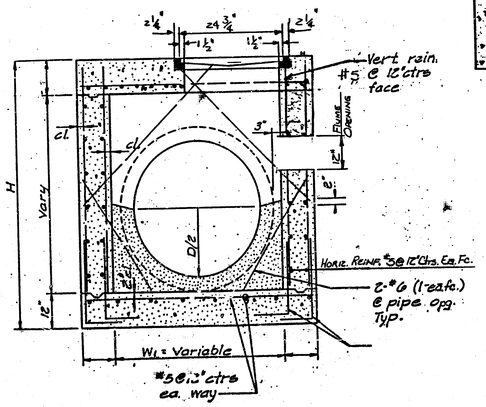

Reinforced Concrete Ditch Inlet Detail &
Reinforced Concrete Area Inlet Detail

Mike Lindebak, City Engineer
City of Wichita, Kansas
Project BENT TREE ADDITION
Project No. 468-76-245-81310-000-000-00
Date: NOV. 1983

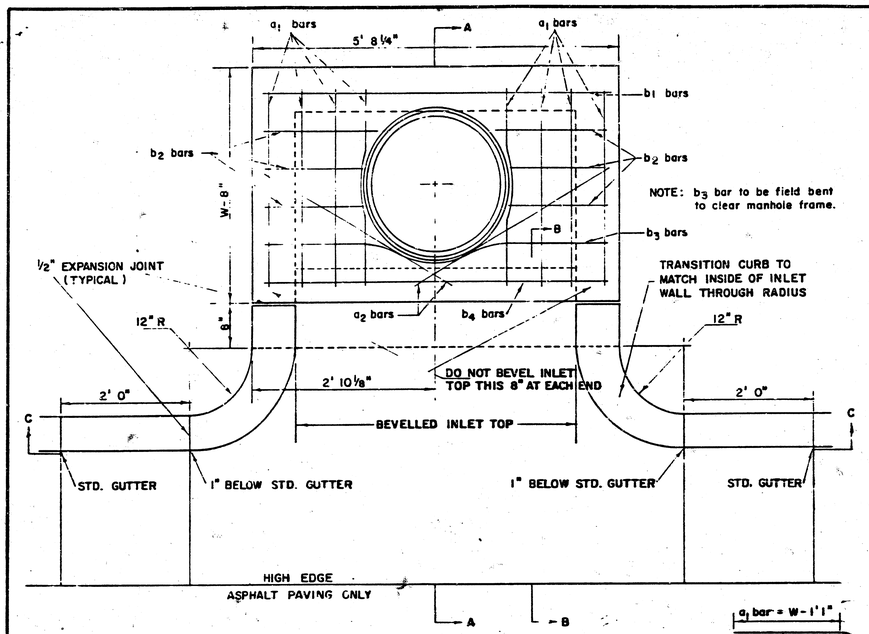

PLAN (SCALE 1" = 1'0")

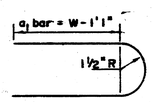

BENDING DIAGRAM

STEEL SCHEDULE

BAR	a_1	a_2*	b_1 W=4'2"	b_1 W=5'0"	b_1 W=6'0"	b_1 W=7'0"	b_1 W=8'0"	b_2	b_3	b_4	WT. LBS.
NUMBER	8	2	1	3	5	7	9	6	1	1	
SIZE	#4	#4	#4	#4	#4	#4	#4	#4	#4	#6	
LENGTH W=4'2"	6'5"	3'4"	5'5"	–	–	–	–	1'5"	5'6"	5'5"	60#
LENGTH W=5'0"	8' 1"	4'4"	–	5'5"	–	–	–	1'5"	5'6"	5'5"	77#
LENGTH W=6'0"	10' 1"	5'4"	–	–	5'5"	–	–	1'5"	5'6"	5'5"	97#
LENGTH W=7'0"	11' 1"	6'4"	–	–	–	5'5"	–	1'5"	5'6"	5'5"	111#
LENGTH W=8'0"	12' 1"	7'4"	–	–	–	–	5'5"	1'5"	5'6"	5'5"	124#

* NOTE: a_2 BARS TO BE PLACED APPROX. 2" BELOW TOP OF INLET COVER

STANDARD CURB INLET PRECAST TOPS			
W	PRE-CAST TOP SIZE	PIPE SIZE	CU. YD. CONC.
4' 2"	3'6"x5'8 1/4"x7 1/2"	21" & SMALLER	0.46 *
5' 0"	4'4"x5'8 1/4"x7 1/2"	24" & 30"	0.57 *
6' 0"	5'4"x5'8 1/4"x7 1/2"	36" & 42"	0.71 *
7' 0"	6'4"x5'8 1/4"x7 1/2"	48" & 54"	0.84 *
8' 0"	7'4"x5'8 1/4"x7 1/2"	60" & 66"	0.97 *

* GROSS VOLUME

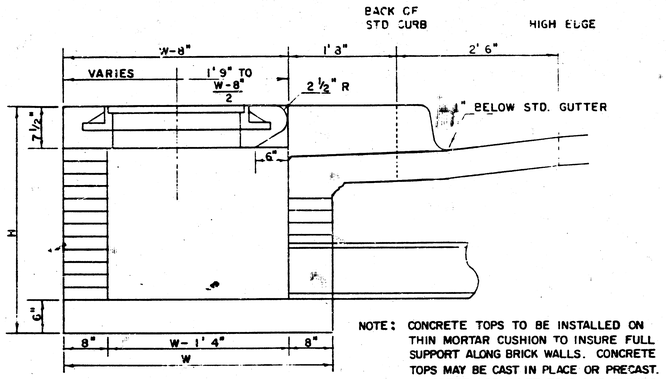

SECTION A-A
(SCALE 1" = 1'0")

NOTE: CONCRETE TOPS TO BE INSTALLED ON THIN MORTAR CUSHION TO INSURE FULL SUPPORT ALONG BRICK WALLS. CONCRETE TOPS MAY BE CAST IN PLACE OR PRECAST. CONCRETE FOR INLET TOPS AND FLOORS SHALL BE *STANDARD* PAVING MIX.

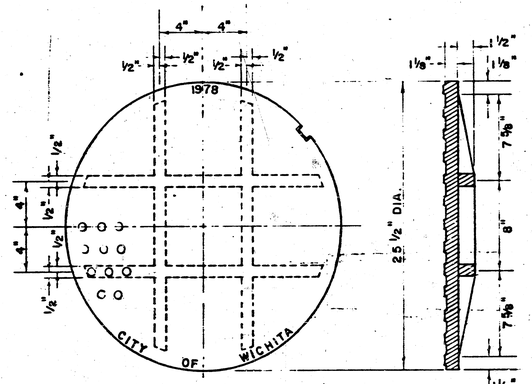

MANHOLE COVER
(SCALE 1" = 6")
WEIGHT = 170 LBS.

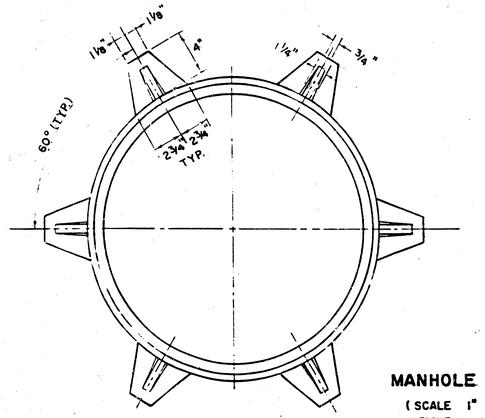

MANHOLE FRAME
(SCALE 1" = 6")
WEIGHT = 180 LBS.

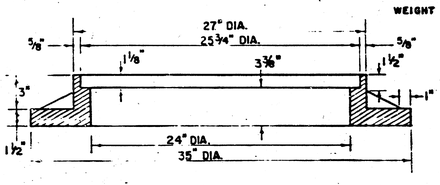

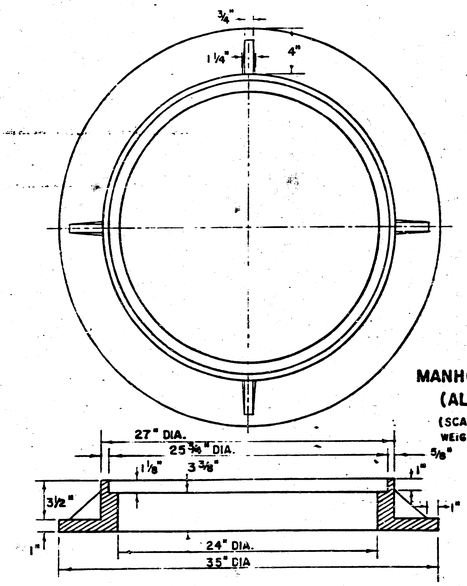

MANHOLE FRAME (ALTERNATE)
(SCALE 1" = 6")
WEIGHT = 180 LBS.

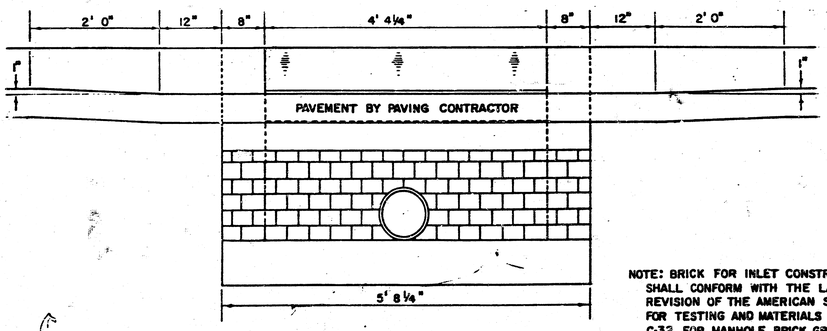

SECTION C-C
(SCALE 1"=1'0")

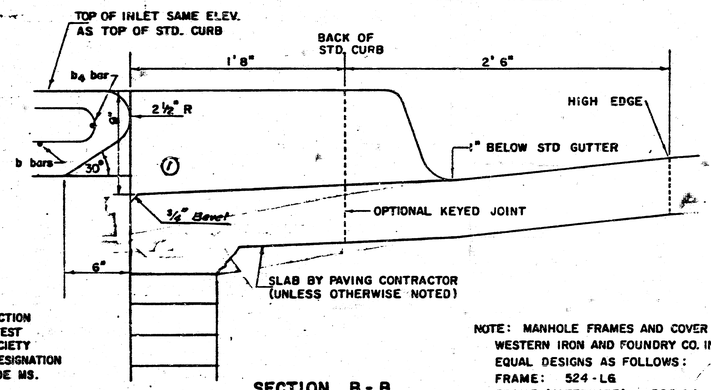

SECTION B-B
(SCALE 1" = 6")

NOTE: BRICK FOR INLET CONSTRUCTION SHALL CONFORM WITH THE LATEST REVISION OF THE AMERICAN SOCIETY FOR TESTING AND MATERIALS DESIGNATION C-32 FOR MANHOLE BRICK GRADE MS.

NOTE: MANHOLE FRAMES AND COVER ARE WESTERN IRON AND FOUNDRY CO. INC. OR EQUAL DESIGNS AS FOLLOWS:
FRAME: 524-LG
FRAME (ALTERNATE): 500 A4
COVER: 222 S4 "NOBBY"

(1) Rev. 5-18-81

DETAIL STANDARD TYPE IA CURB INLET

CITY OF WICHITA, KANSAS

SWS NO 257
PROJ. NO 468-76-245-81310-000-000-001

8/10

NOV. 1983

SEWER APPURTENANCES DETAILS

REVISED SEPTEMBER 1980
REVISED DECEMBER 1981

ADOPTED AS STANDARD DESIGN
BY

CITY of WICHITA, KANSAS

TYPE "A" MANHOLE

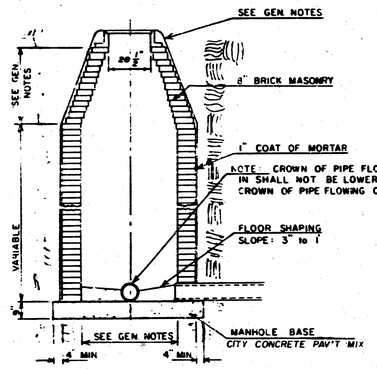

TYPE "A" INSIDE DROP MANHOLE

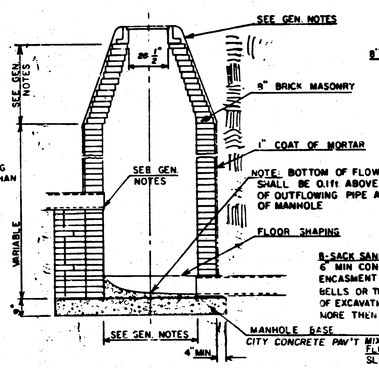

TYPE "A" OUTSIDE DROP MANHOLE

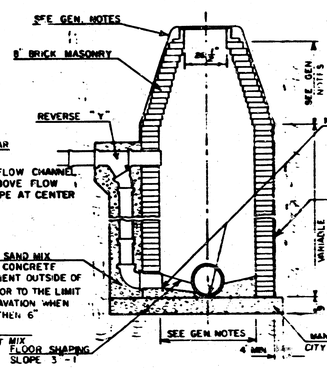

DETAIL OF OUTSIDE DROP CONSTRUCTED ON EXISTING MANHOLE

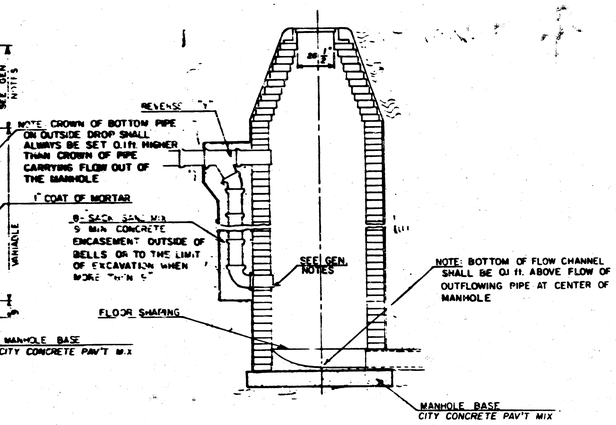

GENERAL NOTES

1. MORTAR USED IN MASONRY CONSTRUCTION SHALL CONTAIN 8 SACKS OF CEMENT PER CUBIC YARD. CONCRETE USED IN MANHOLE BASES SHALL CONFORM TO THE REQUIREMENTS OF CONCRETE FOR CONCRETE PAVEMENT CONSTRUCTION AS SPECIFIED IN THE CITY STANDARD PAVING SPECIFICATIONS USING CITY CONCRETE PAVEMENT MIX WITHOUT AIR ENTRAINING ADMIXTURE. MORTAR SHALL BE PLACED AROUND THE MANHOLE RING AS SHOWN ON THE DRAWINGS WHEN MANHOLES ARE CONSTRUCTED IN UNPAVED AREAS. TYPE "A" MANHOLES CAN BE USED ON SEWERS UP TO 16' IN DEPTH WHEN THE MANHOLE IS NOT LOCATED WITHIN PUBLIC STREET PAVEMENT. MANHOLES CONSTRUCTED WHERE PIPE SIZES ARE SMALLER THAN 24" SHALL HAVE AN INSIDE DIAMETER OF 4'. MANHOLES CONSTRUCTED WHERE PIPE SIZES ARE 24" OR LARGER SHALL HAVE AN INSIDE DIAMETER OF 5'. THE HEIGHT OF THE CORBELS ON 4' DIAMETER MANHOLES SHALL BE 4'. MANHOLES HAVING A DIAMETER OF 5' SHALL HAVE CORBELS 6' IN HEIGHT. COMPLTED MANHOLE SHALL BE WITHOUT LEAKS AND WATER TIGHT.

2. REINFORCING STEEL SHALL BE INSTALLED IN THE MANHOLE BASES AND SHALL CONSIST OF NO.4 BARS PLACED 6" CENTERS IN BOTH DIRECTIONS. THE MANHOLE BASE REINFORCEMENT SHALL BE PLACED 6" ABOVE THE BOTTOM OF THE MANHOLE BASE. ALL COSTS FOR FURNISHING AND INSTALLING REINFORCING STEEL SHALL BE INCLUDED IN THE UNIT PRICE BID FOR THE MANHOLE.

3. OPENINGS SHALL BE CUT INTO THE MANHOLE WALL WHEN OUTSIDE DROPS ARE CONSTRUCTED ON EXISTING MANHOLES. SUCH OPENINGS CUT INTO EXISTING MANHOLES SHALL BE AS SMALL AS PRACTICAL TO FACILITATE INSTALLING AND GROUTING THE NEW PIPE IN PLACE. WATERSTOP GASKETS SHALL BE USED WITH P.V.C. AND A.B.S. COMPOSITE PIPE. THE NEW PIPE SHALL BE GROUTED INTO THE OPENING USING AN APPROVED NONSHRINK GROUT FOR THE FULL MANHOLE WALL THICKNESS. THE EXTERIOR OF THE COMPLETED CONNECTION SHALL BE SEALED WITH AN APPROVED BITUMINOUS COATING SUCH THAT THE CONNECTION WILL BE WATER TIGHT. FLOOR OF MANHOLE SHALL BE MODIFIED TO FORM NEW FLOW CHANNEL FOR THE NEW CONNECTION AS INDICATED BY THE DRAWING. THE VERTICAL DROP FROM THE LOWER PIPE ON SUCH OUTSIDE DROP CONNECTIONS SHALL NOT EXCEED 4' FOR INFLOWING PIPES SIZED 12" OR SMALLER AND 2' FOR INFLOWING PIPES SIZED LARGER THAN 12", EXCEPT THE CROWN OF THE LOWER PIPE SHALL NEVER BE SET BELOW THE CROWN OF ANY LARGER OUTFLOWING PIPE. THIS WORK, INCLUDING MODIFICATION OF MANHOLE FLOOR. SHALL BE PAID FOR AT THE UNIT PRICE BID FOR OUTSIDE DROP STACK CONSTRUCTED ON EXISTING MANHOLE.

4. THE FLOORS OF ALL MANHOLES SHALL BE SHAPED WITH FLOW CHANNELS SUCH THAT THE MANHOLES WILL BE SELF CLEANING AND FREE OF AREAS WHERE SOLUTION COULD BE DEPOSITED AS SEWAGE FLOWS THROUGH THE MANHOLE FROM ALL INLET PIPES TO THE OUTLET PIPE. FLOW CHANNELS SHALL BE FORMED TO MATCH THE BOTTOM HALVES OF THE INFLOWING PIPES AND THE OUTFLOWING PIPE AS SHOWN BY THE DRAWINGS EXCEPT FOR INSIDE DROP MANHOLES. FLOW CHANNELS FOR INSIDE DROP MANHOLES SHALL BE CONSTRUCTED AS INDICATED BY THE DRAWING. MANHOLE FLOORS SHALL HAVE SLOPES OF 3 INCHES PER FOOT IN THE AREAS OUTSIDE OF THE FLOW CHANNELS SLOPED TOWARD THE FLOW CHANNELS. PIPES LAID THROUGH MANHOLES SHALL HAVE THE TOP HALF REMOVED TO NEAT LINES FOR THE FULL INSIDE DIAMETER OF THE MANHOLE. MANHOLE FLOORS SHALL THEN BE SHAPED AROUND THE BOTTOM HALF OF THE PIPE WHICH FORMS THE FLOW CHANNEL.

5. PIPES INSTALLED WITHIN THE EXCAVATION MADE FOR THE MANHOLE SHALL BE CRADLED WITH CONCRETE TO THE LIMITS OF THE MANHOLE EXCAVATION. WHEN CLAY PIPE IS USED, THE CRADLE SHALL EXTEND TO THE FIRST JOINT OUTSIDE THE MANHOLE. THE CRADLE SHALL BE TERMINATED AT THE CLAY PIPE JOINT IN A MANNER WHICH WILL MAINTAIN THE FLEXIBILITY OF THE JOINT. COST OF THE CRADLE WITHIN MANHOLE EXCAVATION OR TO CLAY PIPE JOINTS ADJACENT TO MANHOLE SHALL BE INCLUDED IN THE UNIT PRICE BID FOR THE MANHOLE.

6. MANHOLE COVER CASTINGS AND MANHOLE FRAME CASTINGS SHALL CONFORM TO THE REQUIREMENTS AS INDICATED IN THE STANDARD SPECIFICATIONS AND AS SHOWN IN THE STANDARD DETAIL DRAWING.

7. THE VERTICAL DROP IN INSIDE DROP MANHOLES SHALL NOT EXCEED 4' FOR INFLOWING PIPES SIZED 12" OR SMALLER AND 2' FOR INFLOWING PIPES LARGER THAN 12". THE CROWNS OF INFLOWING PIPES SHALL NEVER BE SET LOWER THAN THE CROWN OF THE OUTFLOWING PIPE.

8. STANDARD MANHOLES TYPE "A" AND STANDARD INSIDE DROP MANHOLES TYPE "A" SHALL BE BID AS STANDARD MANHOLES FOR THE TYPE AND DIAMETER INDICATED. OUTSIDE DROP MANHOLES TYPE "A" SHALL BE BID AS STANDARD OUTSIDE DROP MANHOLES FOR THE TYPE AND DIAMETER INDICATED. ALL MANHOLE DIAMETERS WILL BE 4' UNLESS INDICATED OTHERWISE.

BENT TREE
S.W.S. NO. 257
PROJ NO. 468-76-245-81310-000-000-001

9/10

9
10

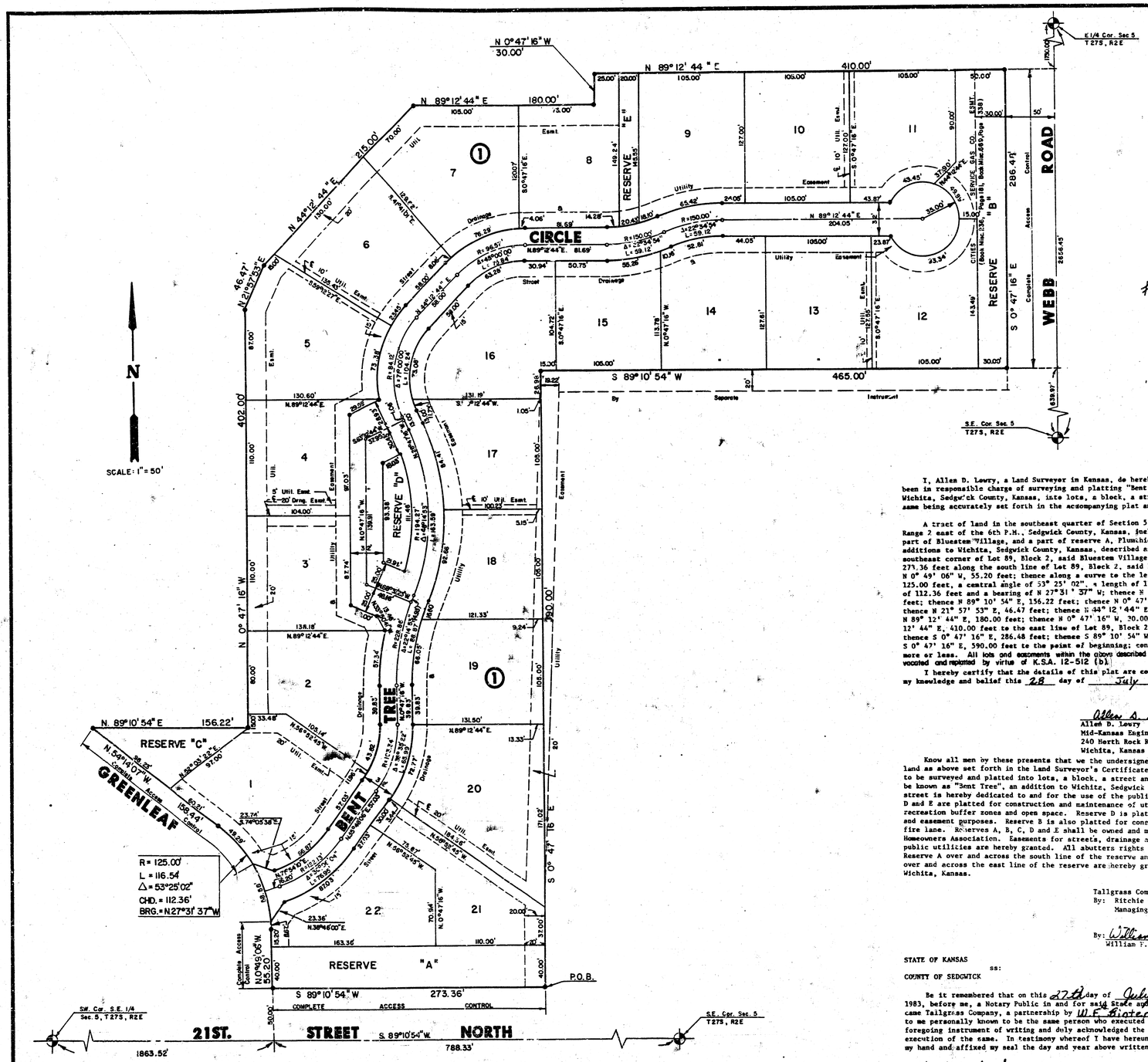

FINAL PLAT OF
BENT TREE

AN ADDITION TO WICHITA, SEDGWICK COUNTY, KANSAS

#648619

I, Allen D. Lowry, a Land Surveyor in Kansas, do hereby certify that I have been in responsible charge of surveying and platting "Bent Tree", an addition to Wichita, Sedgwick County, Kansas, into lots, a block, a street and reserves, the same being accurately set forth in the accompanying plat and described as follows:

A tract of land in the southeast quarter of Section 5, Township 27 south, Range 2 east of the 6th P.M., Sedgwick County, Kansas, including a replat of part of Bluestem Village, and a part of reserve A, Plumchicket Second, both additions to Wichita, Sedgwick County, Kansas, described as beginning at the southeast corner of Lot 89, Block 2, said Bluestem Village; thence S 89° 10' 54" W, 273.36 feet along the south line of Lot 89, Block 2, said Bluestem Village; thence N 0° 49' 06" W, 55.20 feet; thence along a curve to the left having a radius of 125.00 feet, a central angle of 53° 25' 02", a length of 116.54 feet and a chord of 112.36 feet and a bearing of N 27° 31' 37" W; thence N 54° 14' 07" W, 158.44 feet; thence N 89° 10' 54" E, 156.22 feet; thence N 0° 47' 16" W, 402.00 feet; thence N 21° 57' 53" E, 46.47 feet; thence N 44° 12' 44" E, 215.00 feet; thence N 89° 12' 44" E, 180.00 feet; thence N 0° 47' 16" W, 30.00 feet; thence N 89° 12' 44" E, 410.00 feet to the east line of Lot 89, Block 2, said Bluestem Village; thence S 0° 47' 16" E, 286.48 feet; thence S 89° 10' 54" W, 465.00 feet; thence S 0° 47' 16" E, 590.00 feet to the point of beginning; containing 8.60 acres, more or less. All lots and easements within the above described property are being vacated and replatted by virtue of K.S.A. 12-512 (b).

I hereby certify that the details of this plat are correct to the best of my knowledge and belief this 28 day of July, 1983.

Allen D. Lowry
Allen D. Lowry
Mid-Kansas Engineering Consultants, P.A.
240 Heath Rock Road, Suite 130
Wichita, Kansas 67206

ALLEN D. LOWRY REGISTERED LS-756 KANSAS LAND SURVEYOR

Know all men by these presents that we the undersigned property owners of the land as above set forth in the Land Surveyor's Certificate have caused the same to be surveyed and platted into lots, a block, a street and reserves, the same to be known as "Bent Tree", an addition to Wichita, Sedgwick County, Kansas. The street is hereby dedicated to and for the use of the public. Reserves A, B, C, D and E are platted for construction and maintenance of utilities, drainage, recreation buffer zones and open space. Reserve D is platted for street drainage and easement purposes. Reserve B is also platted for construction of a wall and fire lane. Reserves A, B, C, D and E shall be owned and maintained by the Homeowners Association. Easements for streets, drainage and construction of public utilities are hereby granted. All abutters rights of access to or from Reserve A over and across the south line of the reserve and to or from Reserve B over and across the east line of the reserve are hereby granted to the City of Wichita, Kansas.

Tallgrass Company, a Partnership
By: Ritchie Enterprises
Managing Partner

By: William F. Binter
William F. Binter

STATE OF KANSAS
ss:
COUNTY OF SEDGWICK

Be it remembered that on this 27th day of July, 1983, before me, a Notary Public in and for said State and County, came Tallgrass Company, a partnership by W. F. Binter, to me personally known to be the same person who executed the foregoing instrument of writing and duly acknowledged the execution of the same. In testimony whereof I have hereunto set my hand and affixed my seal the day and year above written.

Linda S. Graham, Notary Public
LINDA S. GRAHAM
My Appointment Expires: 2-9-86

LINDA S. GRAHAM NOTARY PUBLIC STATE OF KANSAS

STATE OF KANSAS
ss:
COUNTY OF SEDGWICK

This is to certify that this instrument was filed for record in the Register of Deeds Office at 2:30 P.M. on the 23RD day of AUGUST, 1983.

Bette F. McCart, Register of Deeds
Bette F. McCart

Pat Kettler, Deputy
Pat Kettler

This plat of "Bent Tree" has been submitted to and approved by the Wichita-Sedgwick County Metropolitan Area Planning Commission, Wichita, Kansas.

Dated this 14TH day of July, 1983.

Wichita-Sedgwick County Metropolitan Area Planning Commission

David Bayouth, Chairman

Robert A. Lakin, Secretary

This plat approved and all dedications shown hereon, if any, accepted by the City Commission of the City of Wichita, Kansas, this 9TH day of AUGUST, 1983.

Margalee Wright, Mayor

Donald C. Gisick, City Clerk

This plat approved and all dedications shown hereon, if any, accepted by the Board of County Commissioners of Sedgwick County, Kansas, this 22nd day of August, 1983.

Jack Spratt, Chairman

Donald E. Gragg, Commissioner

Tom Scott, Commissioner

Attest: Dorothy K. White, County Clerk
Dorothy K. White

Entered on transfer record this 23rd day of AUGUST, 1983.

Dorothy K. White, County Clerk
Dorothy K. White

BENT TREE
SWS. NO. 257
PROJ. NO. 468-84-245-8130-000-000-001

10/10

Sanitary sewers Bk 23 pg 908 & 913

20.00

E-1 31