STORM SEWER PLANS FOR
TEAL COVE
S.W.S. NO. 293
PROJECT NO.
468-76-245-81474-000-000-001

CITY OF WICHITA, KANSAS
MICHAEL E. LINDEBAK, CITY ENGINEER
JANUARY, 1986

GENERAL NOTES

1. THE CONTRACTOR SHALL BE RESPONSIBLE FOR PRESERVING PROPERTY IRONS. THE CONTRACTOR SHALL BE REQUIRED TO RE-ESTABLISH ANY PROPERTY IRONS WHICH ARE DAMAGED OR DESTROYED BY HIS CONSTRUCTION OPERATIONS. SUCH IRONS SHALL BE RE-ESTABLISHED BY A LICENSED LAND SURVEYOR OR A LICENSED PROFESSIONAL ENGINEER IN ACCORDANCE WITH STATE LAWS.
2. CONTRACTOR SHALL NOTIFY THE UTILITY COMPANIES OF CONSTRUCTION SCHEDULING.
3. EXISTING UTILITIES AND THEIR LOCATIONS, AS SHOWN ON THE PLANS, REPRESENT THE BEST INFORMATION OBTAINABLE FOR DESIGN. LOCATION INFORMATION HAS BEEN OBTAINED FROM THE VARIOUS UTILITY COMPANIES AND IS EITHER FROM COMPANY RECORD DRAWINGS OR COMPANY PROVIDED FIELD LOCATIONS. THE PLAN LOCATIONS SHOWN ARE NOT GUARANTEED. ADDITIONAL EXISTING UTILITIES MAY ALSO BE ENCOUNTERED.

NOTE: NOTIFY THE FOLLOWING COMPANIES PRIOR TO ANY EXCAVATION:

ARKLA GAS COMPANY	942-8350
BELL TELEPHONE COMPANY	268-2256
CABLEVISION	269-3340
KP&L COMPANY	263-7511
KANSAS GAS & ELECTRIC	261-6375
KANSAS ONE-CALL	1-800-344-7233

BENCH MARKS

BM #1 CITY STD. 30' NORTH AND 34' WEST OF QUARTER SECTION CORNER AT 37TH & GOVERNEOUR
ELEV. = 185.84

TBM #2 RAILROAD SPIKE IN WEST FACE OF WEST LEG OF "H" POLE AT THE NORTHEAST CORNER OF TEAL COVE.
ELEV. = 179.24

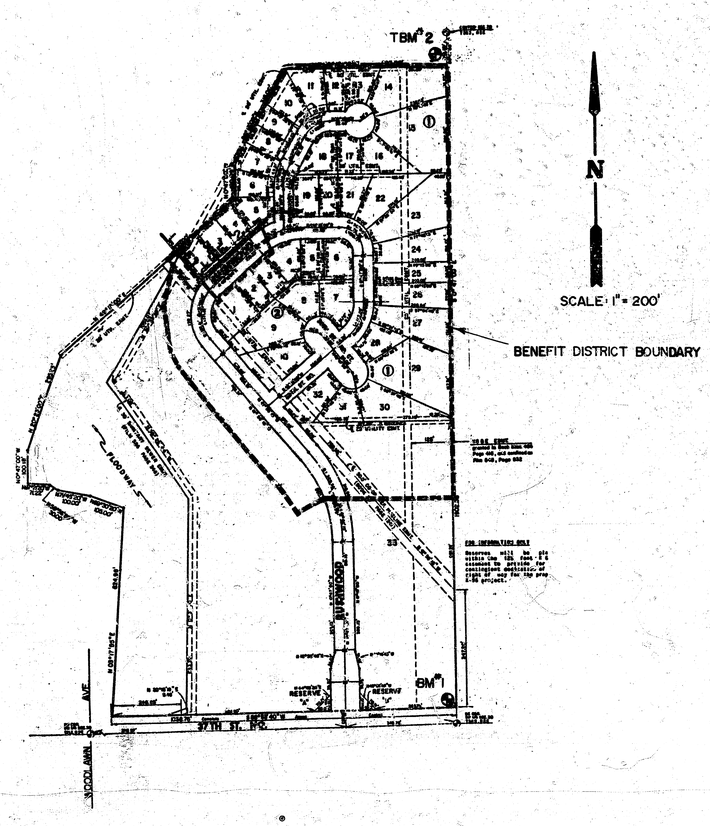

INDEX TO DRAWINGS

SHEET NO.	DESCRIPTION
1	TITLE SHEET
2	LINE 1
3	LINE 2
4-5	DETAILS
6	FINAL PLAT

As Built Plans
5/20/86
GREENE

KENNETH H. BENGTSON LICENSED 7230 KANSAS PROFESSIONAL ENGINEER

TEAL COVE
STORM WATER SEWER
PLAN

Design A.S.
Drawn by D.B.
Checked by K.H.B
Date
Job no.
Sheet 1 of 6

MID-KANSAS ENGINEERING CONSULTANTS PA
3500 NORTH ROCK ROAD
BUILDING #800
WICHITA, KANSAS 67226
682-6561

FILMED FROM THE BEST AVAILABLE COPY

TEAL COVE
STORM WATER SEWER NO. 293
PROJ. NO. 468.76.245.81474 .000.000.001

Scale: 1"=20' Horiz.
1"= 5' Vert.

NORTHBROOK ADDITION

RESERVE "A"

TEAL COVE

RUSHWOOD ADDITION

66' R/W

36' f-f

30' SAN. SEW. ESMT. (FILM 524, PAGE 246)

EXISTING 27" SANITARY SEWER

FLOODWAY

STA. 0+14 LINE 1
BEG. 36" STD. RCP END SECTION

INSTALL 55 S.Y. LIGHT STONE RIP-RAP

STA. 0+00 ℄ CHANNEL

36" RCP LINE

Existing

Proposed

Utility Easement

Sanitary Sewer

Gas Line

Coop

Exist. COOP REF. PIPE LINE EASEMENT

STA. 2+54.8 LINE 1
STA. 0+00 LINE 2
CONST. TYPE 1-A CURB INLET
W = 5'-4", L = 5'-4"
TOP = ~~176.74~~ 176.4
ST. STA. 14+61.47

STA. 2+98.7 LINE 1
CONST. TYPE 1-A CURB INLET
W = 4'-4", L = 11'-4"
TOP = ~~176.24~~ 176.0±
ST. STA. 14+61.47

1710± TOP WATER

4' Side Walk

6' Side Walk

8" Water Line

21" RCP

15.02'

7°15'54"

74.81' R

88.81' R

127.81' R

166.81' R

205.81' R

PLAN LINE 1

PROFILE LINE 1

LIGHT STONE RIP-RAP

36" RCP-END SECTION

SECTION A-A

Sta. 0+00 Line 1

Sta. 0+14 Line 1 Begin 36" Std. RCP End Section

Sta. 2+54.8 Line 1
Sta. 0+00 Line 2
Const. Type 1-A Curb Inlet
W=5'-4", L=5'-4"
Top = ~~176.74~~ 176.4'
St. Sta. 14+61.47

Sta. 2+98.7 Line 1
Const. Type 1-A Curb Inlet
W=4'-4", L=11'-4"
Top = ~~176.24~~ 176.0'
St. Sta. 14+61.47

Exist. Ground

Prop. Curb

INSTALL 55 S.Y. LIGHT STONE RIP-RAP

241.1 ~~240.0~~ L.F. 36" RCP (with Conc. Cradle) @ 1.20%

44.4 ~~43.9~~ L.F. 21" RCP @ 1.00%

Approx. 8" Water Line

Exist. 27" San. S. ℄ = 120.93±

165.20 Channel ℄

166.73 ~~166.23~~

167.70

168.90

169.72 ~~169.22~~

170.68 ~~170.18~~

169.85 ~~169.35~~

171.02±

172.92 ~~172.42~~

185
180
175
170
165

0 1 2 3 4

IN K.E.C.

2/5

As Built Plan
5-20-86
Greene

2/6

FILMED FROM THE BEST AVAILABLE COPY

TEAL COVE
STORM WATER SEWER NO. 293
PROJ. NO. 468.76.245.81474 . 000.000.001

STA. 0+00 LINE 2
STA. 2+54.8 LINE 1
CONST. TYPE 1-A CURB INLET
W = 5'-4", L = 5'-4"
TOP = 176.74
ST. STA. 14+61.47

STA. 2+68.1 LINE 2
CONST. TYPE 1-A CURB INLET
W = 5'-4", L = 6'-4"
TOP = ~~176.79~~ 176.65
ST. STA. 17+21.14
& INSTALL ~~44.5~~ 44.2 L.F. 15" RCP SOUTH
USFL = ~~171.76~~ DSFL = 171.53

STA. 3 + 04.2, LINE 2
CONST. TYPE 1-A CURB INLET
W=5'4", L= 6'4"
TOP = ~~176.65~~ 176.6 ±
ST. STA. 0 + 40.15

STA. 3+44.9 LINE 2
CONST. TYPE 1-A CURB INLET
W = 4'-4", L = 11'-4"
TOP = ~~176.79~~ 176.6 ±
ST. STA. 0+60.55

173.1 ± TOP WATERLINE

CONST. TYPE 1-A CURB INLET
W = 4'-4", L = 6'-4"
TOP = ~~176.65~~ 176.5 ±
ST. STA. 17+14.54

TEAL COVE
ADDITION
RUSHWOOD
RUSHWOOD CIRCLE
4' Side Walk
Sewer
Sanitary
8" Water Line
Gas
Comm.
Proposed Util. Esmt.
Existing Util. Esmt.
SEE LINE 1
16° 41' 17"
14° 44' 33"
30" RCP
21" RCP
24" RCP
15" RCP
58' R/W
66' R/W
140.8' R
125.8' R
107.8' R
89.8' R
74.8' R

Scale: 1"=20' Horiz.
1"= 5' Vert.

PLAN LINE 2

PROFILE LINE 2

Sta. 0+00 Line 2
Sta. 2+54.8 Line 1
Const. type 1-A Curb Inlet
W = 5'-4", L = 5'-4"
Top = 176.74
St. Sta. 14+61.47

Sta. 2+68.1 Line 2
Const. type 1-A Curb Inlet
W = 5'-4", L = 6'-4"
Top = ~~176.79~~ 176.65
St. Sta. 17+21.14 & Install
44.4 L.F. 15" RCP South
USFL = 171.76; DSFL = 171.53

Sta. 3+04.2 Line 2
Const. type 1-A Curb Inlet
W = 5'-4", L = 6'-4"
Top = ~~176.65~~ 176.6 ±
St. Sta. 0+40.15

Sta. 3+44.9 Line 2
Const. type 1-A Curb Inlet
W = 4'-4", L = 11'-4"
Top = ~~176.79~~ 176.6 ±
St. Sta. 0+60.55

Prop. Top Curb
Exist. Ground
Prop. Ground
Prop. Curb
Prop. San. Sewer
8" San. S. @ 1.68% (Stone Enamel)
178.1± top 8" water

~~266.5~~ 269.5 L.F. 30" RCP @ 0.36%
37.1 ~~44.4~~ L.F. 24" RCP @ 0.40%
41.0 ~~44.4~~ L.F. 21" RCP @ 0.40%

169.56
~~169.63~~ 169.63 (30") 170.81 (21")
170.42
170.78
~~171.05~~ 171.05 (24") 171.13 (24") 171.53 (15")
171.26 ~~171.33~~ 171.33 171.37
~~171.43~~ 171.43

180
175
170
165

0 1 2 3 4

3/6

MKEC 3/6

As Built Plan
5/20/86
Greeting-

FILMED FROM THE BEST AVAILABLE COPY

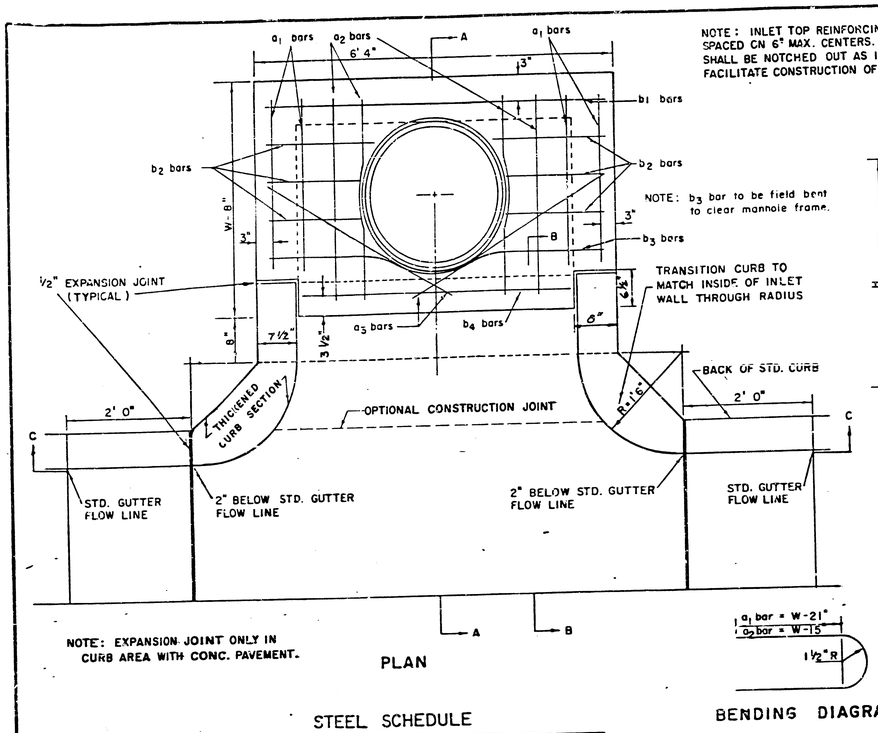

NOTE: EXPANSION JOINT ONLY IN CURB AREA WITH CONC. PAVEMENT.

PLAN

NOTE: INLET TOP REINFORCING SHALL BE SPACED ON 6" MAX. CENTERS. INLET LIDS SHALL BE NOTCHED OUT AS INDICATED TO FACILITATE CONSTRUCTION OF CURB.

NOTE: b_3 bar to be field bent to clear manhole frame.

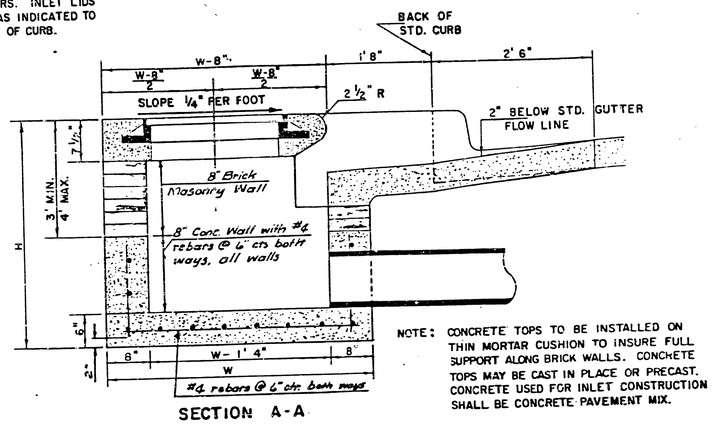

SECTION A-A

NOTE: CONCRETE TOPS TO BE INSTALLED ON THIN MORTAR CUSHION TO INSURE FULL SUPPORT ALONG BRICK WALLS. CONCRETE TOPS MAY BE CAST IN PLACE OR PRECAST. CONCRETE USED FOR INLET CONSTRUCTION SHALL BE CONCRETE PAVEMENT MIX.

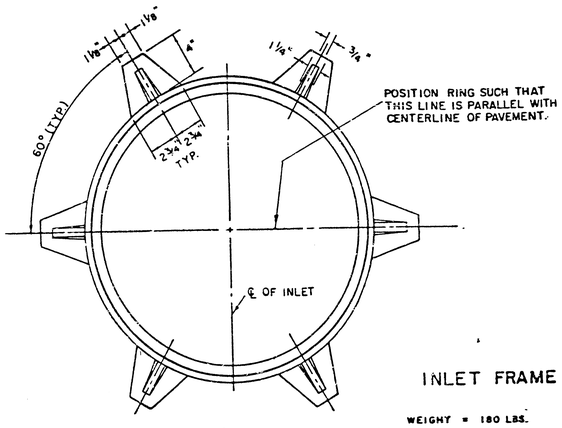

INLET FRAME

WEIGHT = 180 LBS.

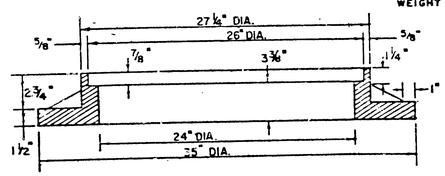

SEE CITY OF WICHITA STANDARD MANHOLE FRAME AND COVER DETAIL SHEET FOR COVER DETAILS TO BE USED WITH INLET FRAME.

BENDING DIAGRAM

NOTE: CONTRACTOR SHALL HAVE THE OPTION OF CONSTRUCTING 8" BRICK MASONRY WALLS BETWEEN THE CONCRETE INLET BASE AND TOP ON THIS INLET WHEN W = 6' 4" AND H = 7' 0" OR LESS.

ADDITIONAL CURB AND GUTTER CONSTRUCTION NECESSARY TO CONNECT SET-BACK INLET TO PAVEMENT WILL BE PAID FOR AT THE UNIT PRICE BID FOR EACH INLET HOOKUP.

INLET INVERT SHALL BE SHAPED WITH 8 SACK SAND MIX CONCRETE TO CREATE FLOW CHANNELS AND TO INCREASE HYDRAULIC EFFICIENCY SUCH THAT THE INLET WILL BE SELF CLEANING BETWEEN ALL INLET AND/OR OUTLET PIPES. THE END OF ALL PIPES INSTALLED IN THE INLETS SHALL BE CUT OFF FLUSH WITH THE INSIDE FACE OF THE INLET WALL.

STEEL SCHEDULE

BAR	a_1	a_2	a_3*	b_1 W=4'4"	W=5'4"	W=6'4"	W=7'4"	W=8'4"	b_2	b_3	b_4	WT. LBS.
NUMBER	4	4	2	1	3	5	7	9	6	1	1	
SIZE	#4	#4	#4	#4	#4	#4	#4	#4	#4	#4	#6	
LENGTH W=4'4"	5'7"	6'7"	4'0"	6' 1"	–	–	–	–	1' 9"	6'2"	4'8"	60±
LENGTH W=5'4"	7'7"	8'7"	5'0"	–	6' 1"	–	–	–	1' 9"	6'2"	4'8"	81 ±
LENGTH W=6'4"	9'7"	10'7"	6'0"	–	–	6' 1"	–	–	1' 9"	6'2"	4'8"	101±
LENGTH W=7'4"	11'7"	12'7"	7'0"	–	–	–	6' 1"	–	1' 9"	6'2"	4'8"	121±
LENGTH W=8'4"	13'7"	14'7"	8'0"	–	–	–	–	6' 1"	1' 9"	6'2"	4'8"	141±

* NOTE: a_3 BARS TO BE PLACED APPROX. 2" BELOW TOP OF INLET COVER

STANDARD CURB INLET PRECAST TOPS			
W	PRE-CAST TOP SIZE	PIPE SIZE	CU. YD. CONC.
4' 4"	3'8"x 6'4" x7 1/2"	21" & SMALLER	0.38 ±
5' 4"	4'8"x 6'4" x7 1/2"	24" & 30"	0.51 ±
6' 4"	5'8"x 6'4" x7 1/2"	36" & 42"	0.64 ±
7' 4"	6'8"x 6'4" x7 1/2"	48" & 54"	0.77 ±
8' 4"	7'8"x 6'4" x7 1/2"	60" & 66"	0.90 ±

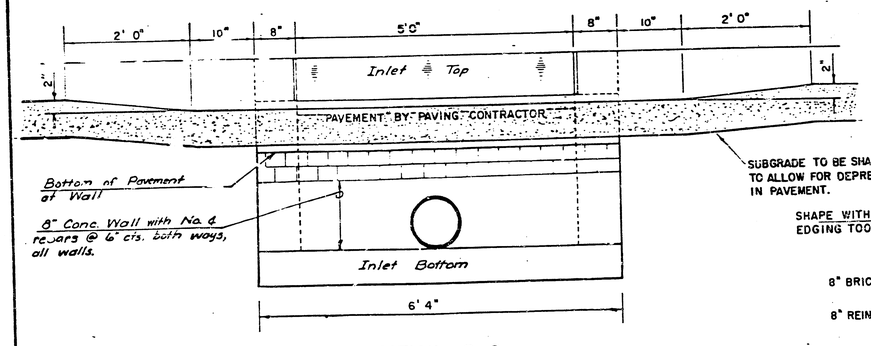

SECTION C-C

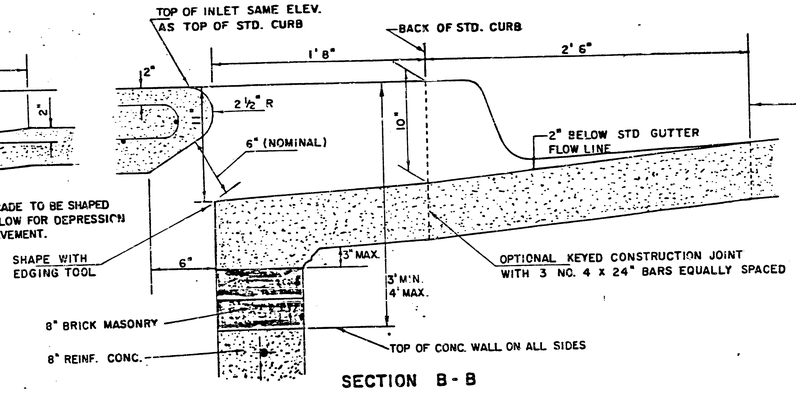

SECTION B-B

DETAIL STANDARD TYPE IA CURB INLET

CITY OF WICHITA, KANSAS

INLET OPENING = 6" × 5' 0"

JUNE 1984

4/6

4/6

FILMED FROM THE BEST AVAILABLE COPY ....

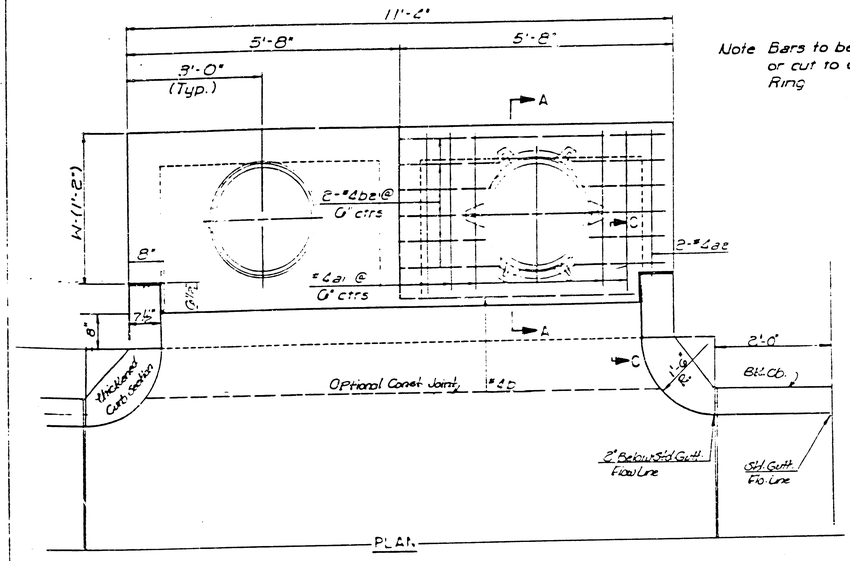

Note Bars to be field bent or cut to clear Manhole Ring

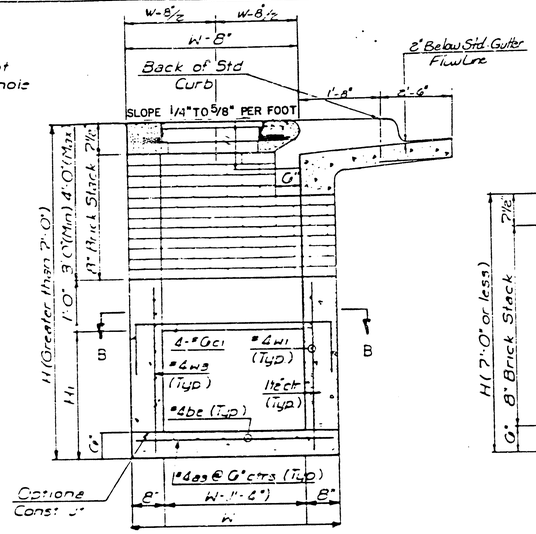

TYPICAL INLET SECTION AT CENTER WALL
(Reinforced Concrete walls)

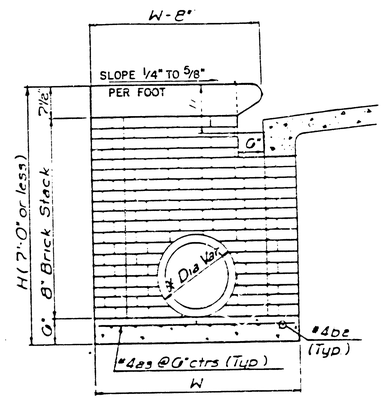

TYPICAL INLET SECTION AT CENTER WALL
(Masonry Walls)

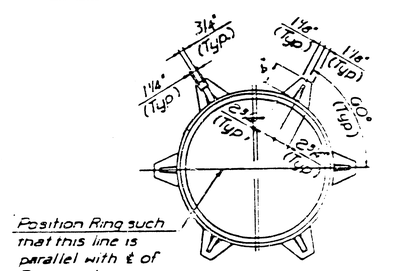

INLET FRAME (Weight = 180 LBS)

SEE CITY OF WICHITA STANDARD MANHOLE FRAME AND COVER DETAIL SHEET FOR COVER DETAILS TO BE USED WITH INLET FRAME

GENERAL NOTES

Concrete shall be 2OW Standard Paving Mix All exposed edges shall be finished with an edging tool
Reinforcing Bars shall be field bent or cut to clear pipes
All bars are #4 bars at 6" Spacing and shall have a minimum clearance of 1½" unless otherwise noted
Floors of inlet shall be shaped with 8 Sack Sand Mix Concrete to increase hydraulic efficiency such that the inlet will be self cleaning between all inlet and/or outfall pipe(s)
The Contractor shall have the option of constructing 8" Brick Masonry Walls between the concrete inlet base and top on this inlet when H=7'-0" or less and W=6'-4" or less

THE ENDS OF ALL PIPES INSTALLED IN INLETS SHALL BE CUT OFF FLUSH WITH THE INSIDE FACE OF THE INLET WALL.

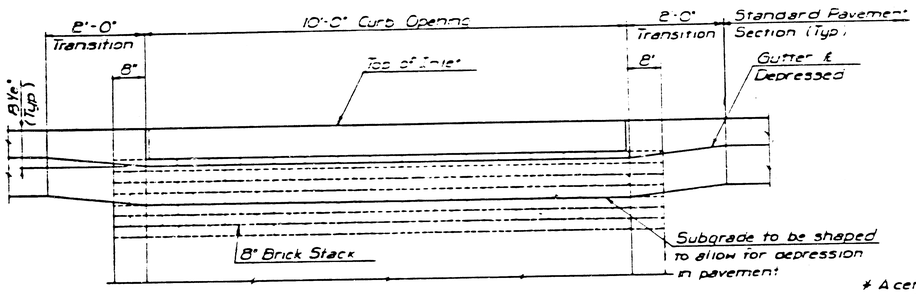

ELEVATION

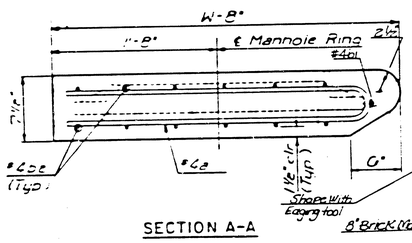

SECTION A-A

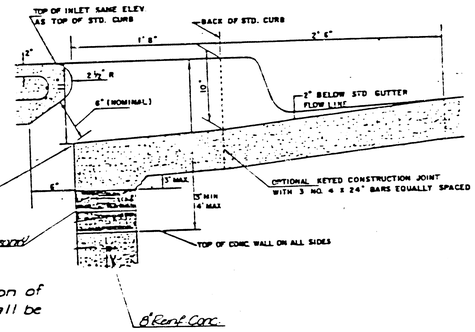

* A center wall opening shall be provided by means of a section of reinforced concrete pipe. The minimum diameter used shall be that of the outlet pipe

Note Concrete top to be installed on thin mortar cushion to insure full support along walls

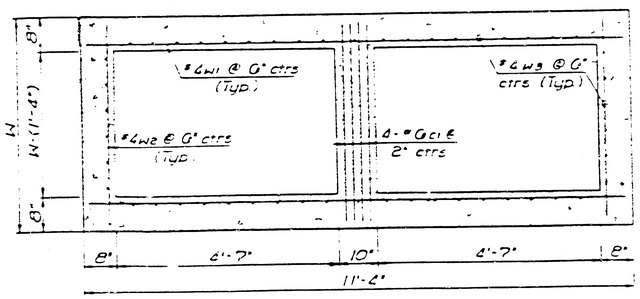

SECTION B-B

SLAB AND FLOOR REINFORCING

		W=4'-6"		W=5'-6"		W=6'-6"		W=7'-6"		W=8'-6"	
Mark	Size	No	Length	No	Length	No	Length	No	Length	No	Length
a1	#6	13	6'-7½"	13	8'-7½"	13	10'-7½"	13	12'-7½"	13	14'-7½"
a2	#6	2	6'-0"	2	8'-0"	2	10'-0"	2	12'-0"	2	14'-0"
a3	#6	20	4'-1"	20	5'-1"	20	6'-1"	20	7'-1"	20	8'-1"
b	#6	1	5'-8"	1	7'-8"	1	9'-8"	1	11'-8"	1	13'-8"
#DE	#4	18	11'-1"	24	11'-1"	30	11'-1"	36	11'-1"	42	11'-1"

WALL REINFORCING

		W=4'-6"		W=5'-6"		W=6'-6"		W=7'-6"		W=8'-6"	
Mark	Size	No	Length	No	Length	No	Length	No	Length	No	Length
c1	#6	4	6'-1"	4	7'-1"	4	8'-1"	4	9'-1"	4	10'-1"
w1	#4	1	11'-1"	1	11'-1"	1	11'-1"	1	11'-1"	1	11'-1"
w2	#6	1	4'-1"	1	5'-1"	1	6'-1"	1	7'-1"	1	8'-1"
w3	#6	2	5	2	3	2	3	2	3	2	3

* Field bend or cut Reinforcing as required for clearance

1.4 (H1-6") ② 40+4 (W-1) ③ H1-10".

SECTION C-C

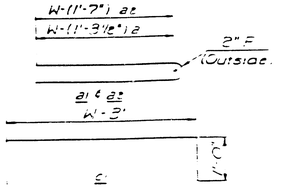

BENDING DIAGRAMS

DETAIL STANDARD
TYPE IA CURB INLET
INLET OPENING = 6" x 10'-0"
CITY OF WICHITA
M. E. LINDEBAK, CITY ENGINEER 5/6
OCTOBER 1984

5/6

FILMED FROM THE BEST AVAILABLE COPY

FINAL PLAT OF

TEAL COVE

AN ADDITION TO WICHITA, SEDGWICK COUNTY, KANSAS

I, Michael D. Harding, a Civil Engineer in Kansas, do hereby certify that I have been in responsible charge of surveying and platting of "TEAL COVE", an addition to Wichita, Sedgwick County, Kansas, into Lots, Blocks, Streets, Reserves and a Floodway, the same being accurately set forth in the accompanying plat and described herein:

A tract of land lying within the southwest quarter of Section 30, Township 26 South, Range 2 east of the 6th Principal Meridian, more particularly described as follows:

Beginning at the intersection of the east line of said southwest quarter and the north line of 37th Street North, said point being 50.00 feet north of the south line of said southwest quarter section; thence westerly along said north line bearing bearing S 88° 53' 40" W. 1068.76 feet; thance N 03° 17' 55" E, 624.98 feet; thence N 69° 30' 20" W, 105.00 feet; thence N 79° 45' 20" W, 100.00 feet; thence N 58° 56' 20" W, 30.00 feet; thence N 87° 21' 20" W, 71.22 feet to the southeast corner of reserve "B", "Northbrook", an addition to Wichita, Sedgwick County, Kansas; thence northerly along the east line of said addition bearing N 00° 47' 00" W, 100.18 feet; thence N 20° 23' 00" E, 295.23 feet; thence N 49° 13' 00" E, 715.00 feet; thence N 00° 47' 00" W, 100.00 feet; thence N 29° 13' 00" E, 315.00 feet; thence N 89° 13' 00" E, 505.00 feet to a point on the east line of said southwest quarter section; thence southerly along said east line bearing S 00° 47' 00" E, 1902.58 feet to the point of beginning containing 43.00 acres more or less.

I hereby certify that the details of this plat are correct to the best of my knowledge and belief this 1st day of May, 1985.

Michael D. Harding
Mid-Kansas Engineering Consultants, P.A.
3500 N. Rock Road, Bldg. 800
Wichita, KS 67226

MICHAEL D. HARDING LICENSED 9398 KANSAS PROFESSIONAL ENGINEER

Know all men by these presents that we the undersigned property owners of the land as above set forth in the Civil Engineers Certificate, have caused the same to be surveyed and platted into lots, blocks, streets, reserves and a floodway, the same to be known as "TEAL COVE" an addition to Wichita, Sedgwick County, Kansas. Reserves "A" and "B" are being platted for construction and maintenance of public utilities, landscaping, irrigation, walls, entry signs, entrance structures, and drainage. The floodway shall be the responsibility of the owners of Lot 1, Block 1 until such time as the governing body exercising jurisdiction elects to assume the responsibility for maintainance and improvement of the drainage, provided further that no building shall be constructed on or within said floodway, nor shall any fill, change of grade, creation of channel or other work be carried on without the permission from the City Engineers office. Minimum pad elevation on Lots 1 thru 14 inclusive, of Block 1 shall be as indicated on the face of the plat. Reserves "A" and "B" shall be owned and maintained by the owners of Lot 1, Block 1, and Lot 33, Block 1, respectively. Easements for the construction and maintenance of public utilities are hereby granted as indicated. All abutters rights of access to or from 37th Street North over and across the south line of "TEAL COVE", is hereby granted to the City of Wichita. Building setbacks shall be in accordance with the Northbrook Community Unit Plan (D.P. - 119) on file in the Wichita, Sedgwick County, Metropolitan Area Planning Department office. The dedication along the east line of the plat is contingent on the need for additional street right-of-way for the Northeast Circumferential project.

Mary Lynn Oliver
Mary Lynn Oliver

William L. Oliver Jr.
William L. Oliver Jr.

STATE OF KANSAS SS:
COUNTY OF SEDGWICK

Be it remembered that on this 7th day of May, 1985, before me, a Notary Public in and for said State and County, came William L. Oliver Jr. and Mary Lynn Oliver to me personally known to be the same persons who executed the foregoing instrument of writing and duly acknowledged the execution of the same. In testimony whereof I have hereunto set my hand and affixed my notarial seal the day and year above written.

Jan Wallace, Notary Public

My Appointment Expires:

JAN WALLACE, Notary Public, State of Kansas, My Appt. Exp.

This plat of "Teal Cove" has been submitted to and approved by the Wichita-Sedgwick County Metropolitan Area Planning Commission, Wichita, Kansas.

Dated this 15th day of November, 1984.

Wichita-Sedgwick County Metropolitan Area Planning Commission

William J. Goebel, Vice Chairman
William J. Goebel

Robert A. Lakin, Secretary
Robert A. Lakin

This plat approved and all dedications shown hereon, if any, accepted by the City Commission of the City of Wichita, Kansas, this 28th day of May, 1985.

Robert L. Brown, Mayor
Robert L. Brown

Donald C. Gisick, City Clerk
Donald C. Gisick

Entered on transfer record this 11 day of June, 1985.

Don Wright, County Clerk
Don Wright

#951236

STATE OF KANSAS SS:
COUNTY OF SEDGWICK

This is to certify that this instrument was filed for record in the Register of Deeds Office at 4:30 PM, on the 12th day of JUNE, 1985.

Pat Kettler, Register of Deeds
Pat Kettler

Ed Resa, Deputy
Ed Resa

We, the Mid-Kansas Federal Savings and Loan Association, Wichita, Kansas, mortgagees on the above described property do hereby consent to the plat of "TEAL COVE".

Mid-Kansas Federal Savings and Loan Association

By: Max L. Herzet, Senior Vice-President

STATE OF KANSAS SS:
COUNTY OF SEDGWICK

Be it remembered that on this 7th day of May, 1985, before me, a Notary Public in and for said State and County, came Max L. Herzet, Senior Vice-president, on behalf of Mid-Kansas Federal Savings and Loan Association, to me personally known to be the same person who executed the foregoing instrument of writing and duly acknowledged the execution of the same. In testimony whereof I have hereunto set my hand and affixed my notarial seal the day and year above written.

DeAnn Norris, Notary Public

My Appointment Expires: 4-14-87

DeANN NORRIS NOTARY PUBLIC STATE OF KANSAS My Appt. Exp.

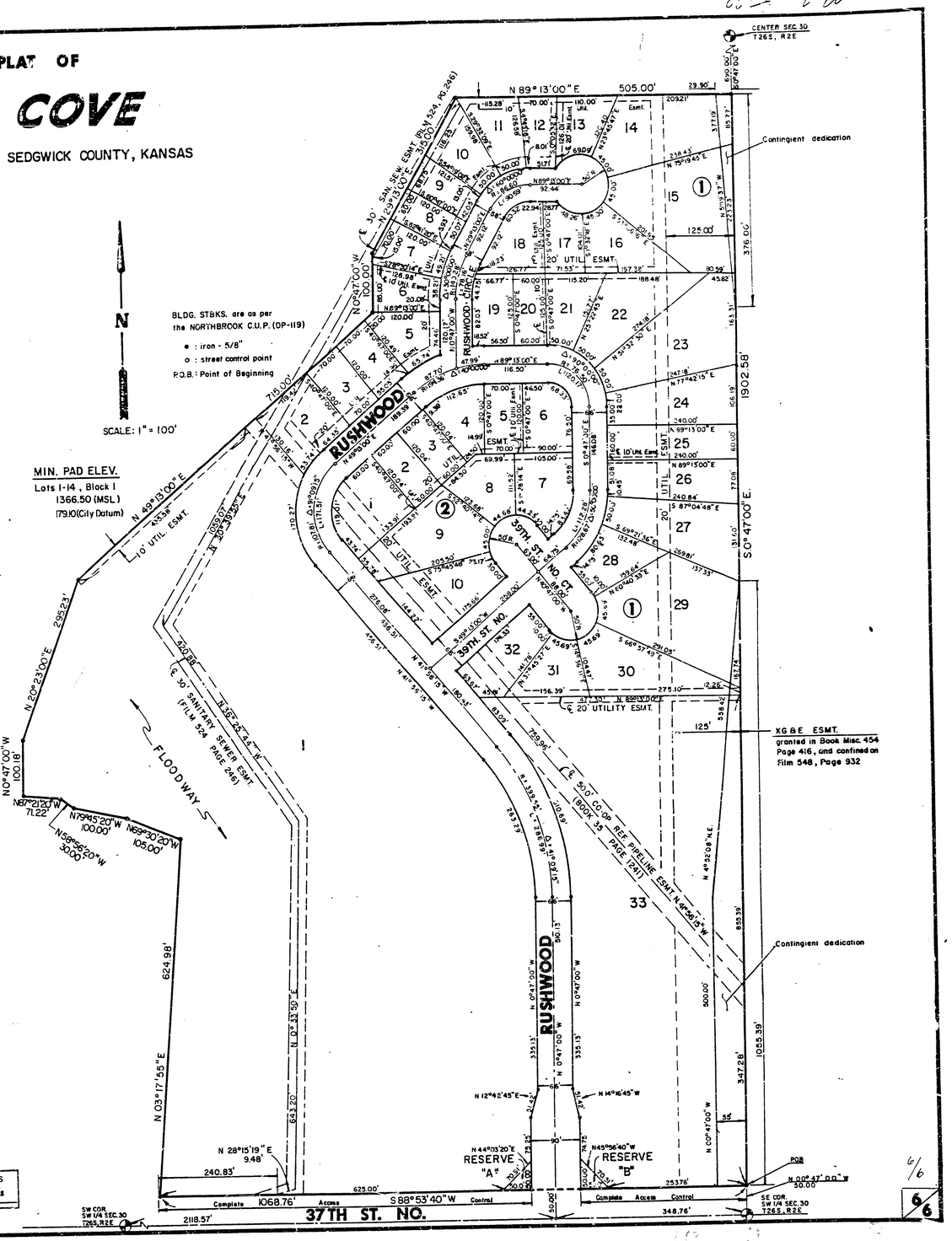

FILMED FROM THE BEST AVAILABLE COPY