STORM SEWER PLANS FOR
HUNTINGTON PLACE
S.W.S. NO. 314
PROJECT NO.
468·76·245·81584·000·000·001

CITY OF WICHITA, KANSAS
MICHAEL E. LINDEBAK, CITY ENGINEER
SEPTEMBER , 1986

GENERAL NOTES

1. THE TOPS OF INLETS AND MANHOLE AS NOTED ON THE PLANS MAY VARY SO AS TO MEET PROPOSED TOP OF CURB ELEVATIONS OR PAVEMENT ELEVATIONS. THE FIELD ENGINEER SHALL LOCATE INLETS AND MANHOLES WITH REFERENCE TO PROPOSED PAVING PLANS OF THE PERTINENT STREETS.
2. ALL CONCRETE SHALL BE STANDARD PAVING MIX UNLESS OTHERWISE NOTED.
3. THE CONTRACTOR SHALL BE RESPONSIBLE FOR PRESERVING PROPERTY IRONS. THE CONTRACTOR SHALL BE REQUIRED TO RE-ESTABLISH ANY PROPERTY IRONS WHICH ARE DAMAGED OR DESTROYED BY HIS CONSTRUCTION OPERATIONS. SUCH IRONS SHALL BE RE-ESTABLISHED BY A LICENSED LAND SURVEYOR OR A LICENSED PROFESSIONAL ENGINEER IN ACCORDANCE WITH STATE LAWS.
4. TREES TO BE REMOVED ARE MARKED ☆ ALL TREES WHICH IN THE OPINION OF THE FIELD ENGINEER CAN BE SAVED, SHALL BE SAVED.
5. CONTRACTOR SHALL NOTIFY THE UTILITY COMPANIES OF CONSTRUCTION SCHEDULING.
6. EXISTING UTILITIES AND THEIR LOCATIONS, AS SHOWN ON THE PLANS, REPRESENT THE BEST INFORMATION OBTAINABLE FOR DESIGN. LOCATION INFORMATION HAS BEEN OBTAINED FROM THE VARIOUS UTILITY COMPANIES AND IS EITHER FROM COMPANY RECORD DRAWINGS OR COMPANY PROVIDED FIELD LOCATIONS. THE PLAN LOCATIONS SHOWN ARE NOT GUARANTEED. ADDITIONAL EXISTING UTILITIES MAY ALSO BE ENCOUNTERED.

NOTE: NOTIFY THE FOLLOWING COMPANIES PRIOR TO ANY EXCAVATION:

ARKLA GAS COMPANY	942-8350
BELL TELEPHONE	1-316-571-2115
CABLEVISION	262-0661
KPL GAS SERVICE COMPANY	263-7511
KANSAS GAS & ELECTRIC	264-1141
KANSAS ONE-CALL	1-800-344-7233
CITIES SERVICE	524-0491
KANSAS GAS SUPPLY	316-254-7243
CONTINENTAL PIPELINE COMPANY	316-681-2081
CO-OP REFINERY PIPELINE	316-221-2107

BENCH MARKS

B.M. # 1: 1/2mile east of 119th St.West & 13th St.
City of Wichita Bench Mark Disc. due north of 1/4 Section Corner, 8'± north of H.L. Pole east-west, 40.6' north of centerline 13th Street.
ELEV. = 158.73

B.M. # 2: Chisled "□" on Top of Curb at West end return, S.W. Corner 13th & Parkdale
ELEV. =156.24

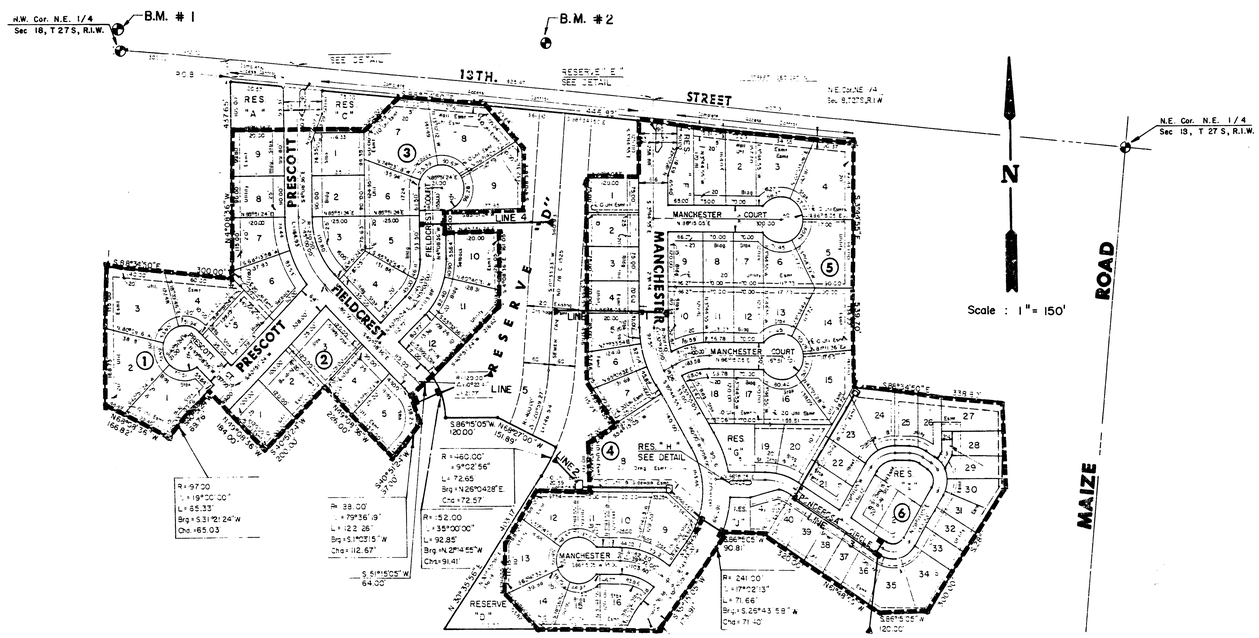

INDEX TO DRAWINGS

SHEET NO.	DESCRIPTION
1	TITLE SHEET
2	PLAN LINE 1
3	PLAN LINE 2
4-5	PLAN LINE 3
6	PLAN LINE 4
7	PLAN LINE 5
8-9	S.W.S. DETAIL
10	TYPE 1-A CURB INLET 1-A(6"X5'-0")
11	TYPE 1-A CURB INLET 1-A(6"X10'-0")
12-13	FINAL PLAT

As Builts 9/11 M.E. Gregg

HUNTINGTON PLACE STORM SEWER PLANS

Design: F.B.N.
Drawn by: F.F.
Checked by: K.H.B.
Date: Sept. 1986
Job no:

MID-KANSAS ENGINEERING CONSULTANTS PA
3500 NORTH ROCK ROAD
BUILDING #800
WICHITA, KANSAS 67226
682-6561

Sheet 1 of 13

FILMED FROM THE BEST AVAILABLE COPY....

HUNTINGTON PLACE
STORM WATER SEWER
PROJ-NO-448-76-245-8153I-000-000-001

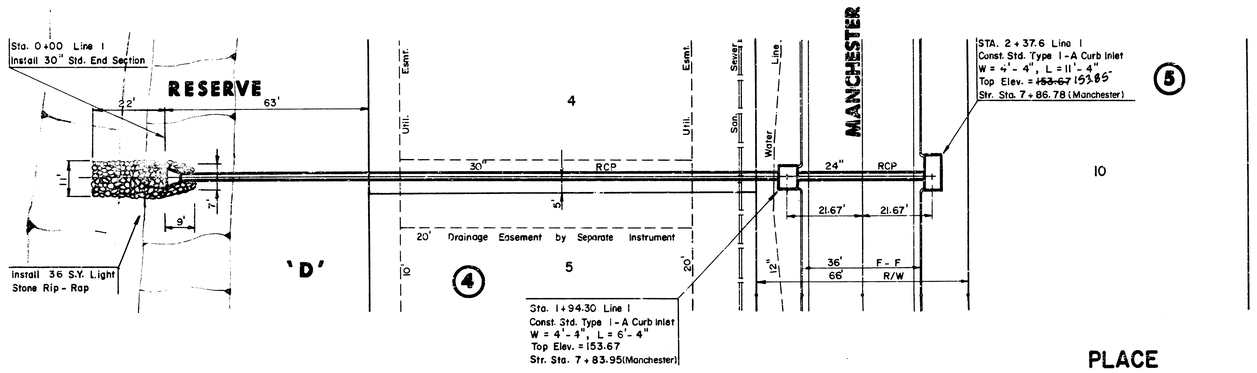

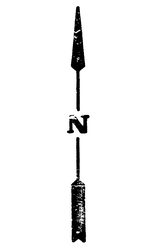

Scale : 1" = 20' Horiz.
1" = 5' Vert.

PLAN LINE 1

PROFILE LINE 1

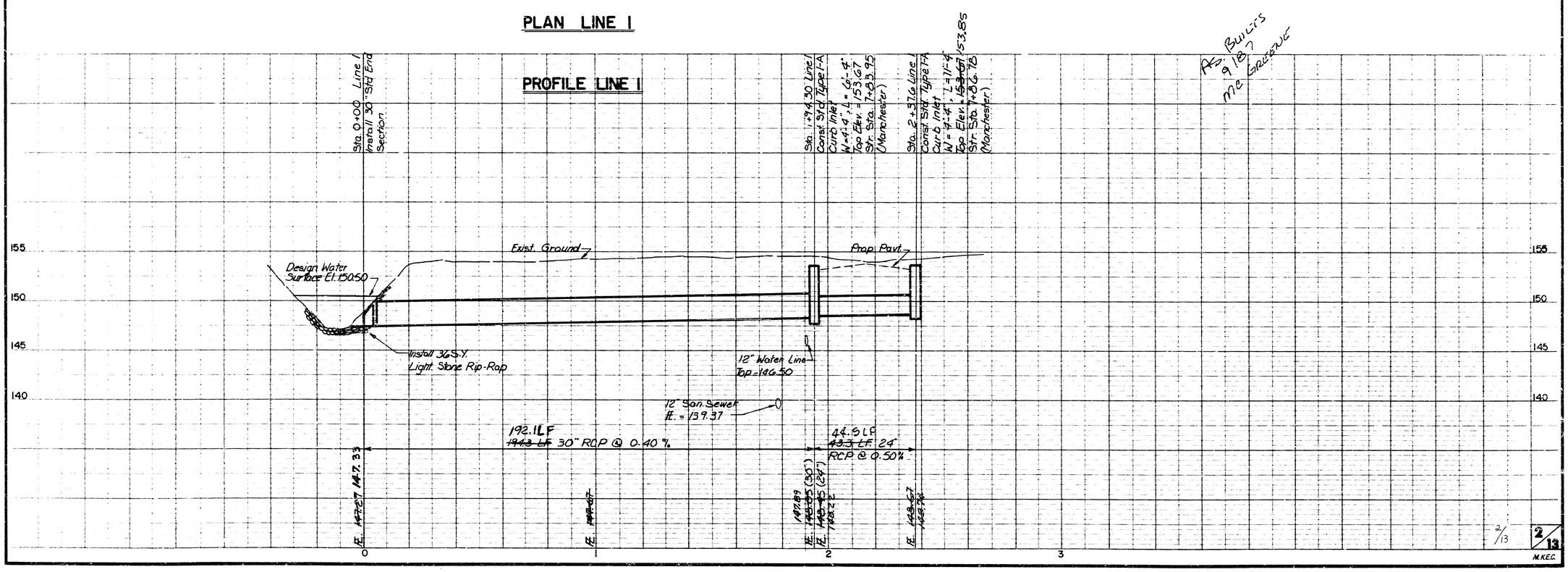

Re: Bullis 9/87
Mc Gregor

2/13

2/13

M.K.E.C.

FILMED FROM THE BEST AVAILABLE COPY.....

HUNTINGTON PLACE
STORM WATER SEWER
PROJ.NO. 448-76-245-81581-000-000-001

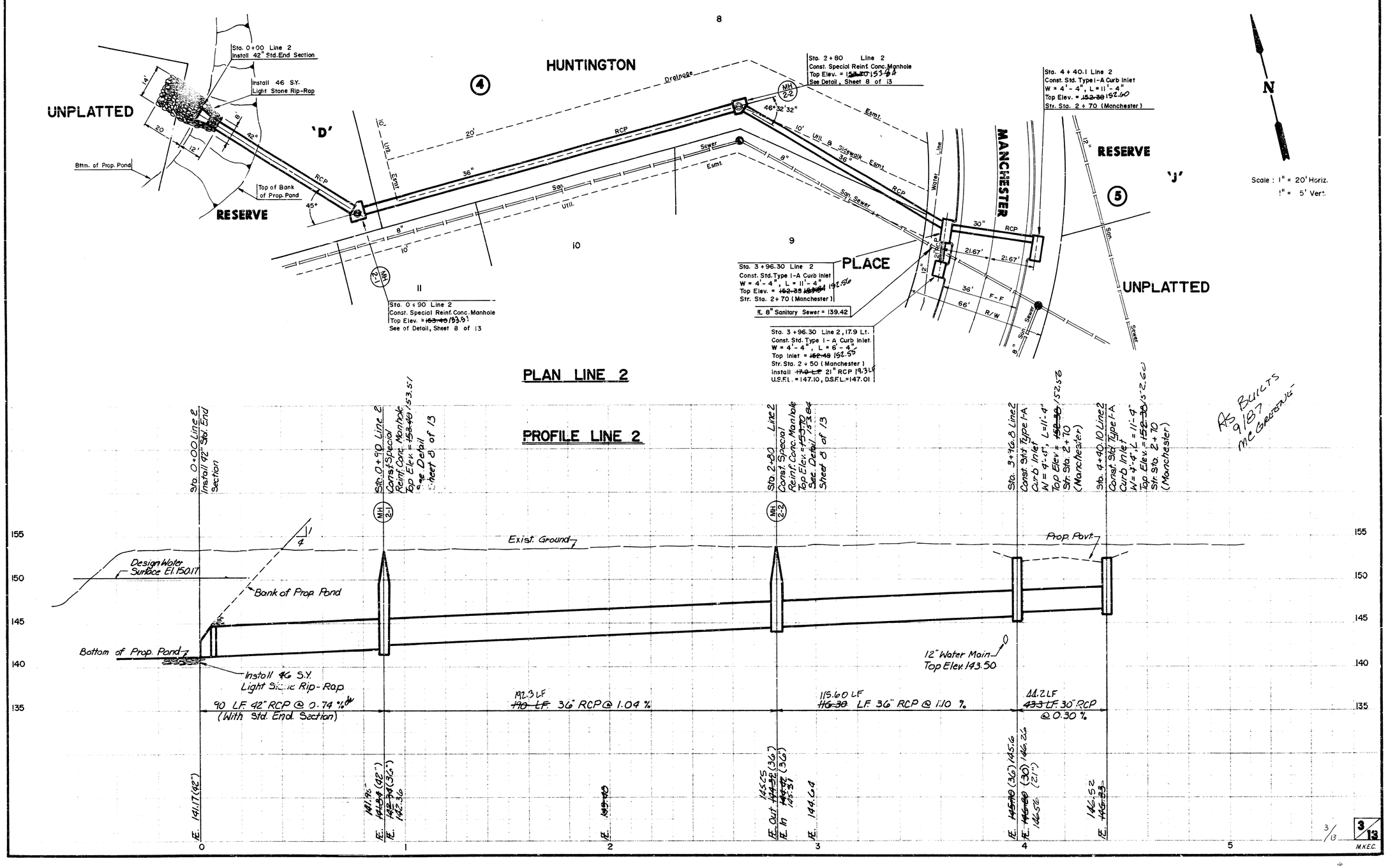

FILMED FROM THE BEST AVAILABLE COPY

HUNTINGTON PLACE
STORM WATER SEWER
PROJ-NO-448-76-245-81581-000-000-001

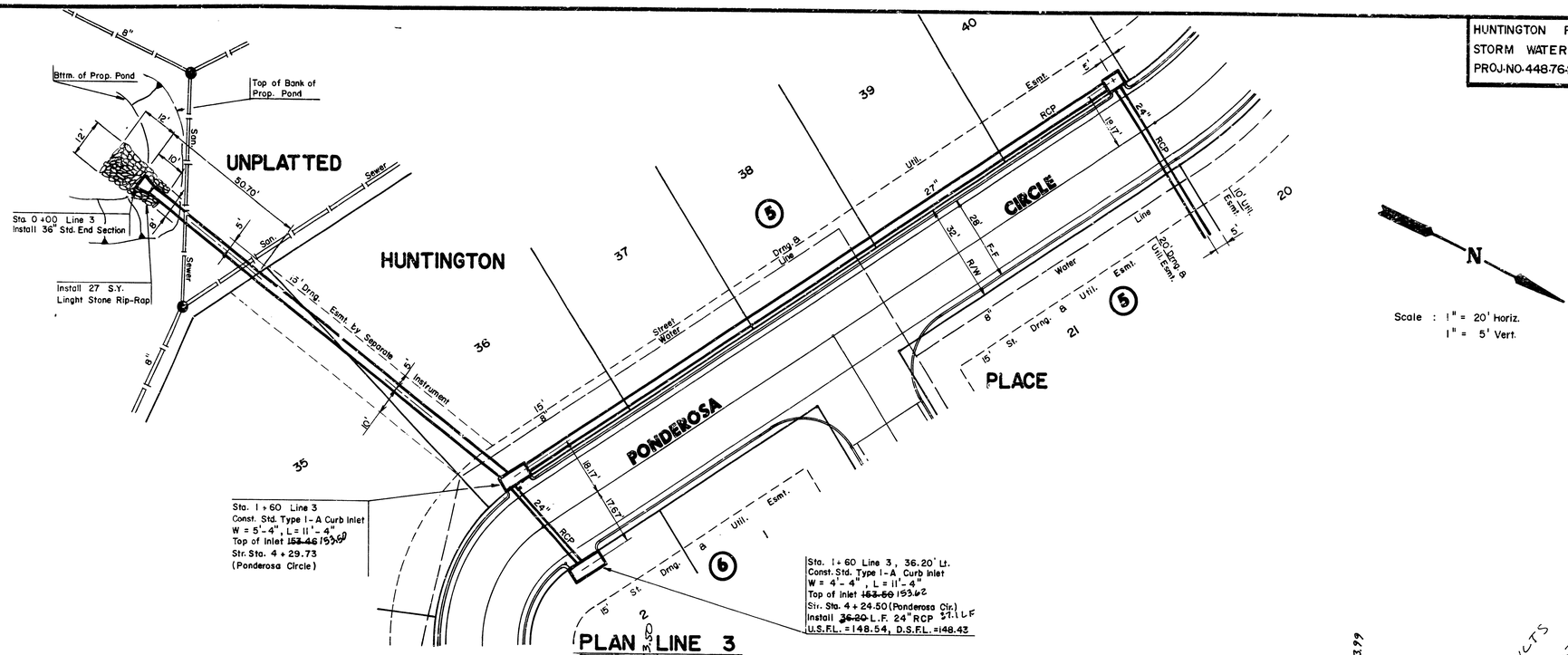

PLAN LINE 3

PROFILE LINE 3

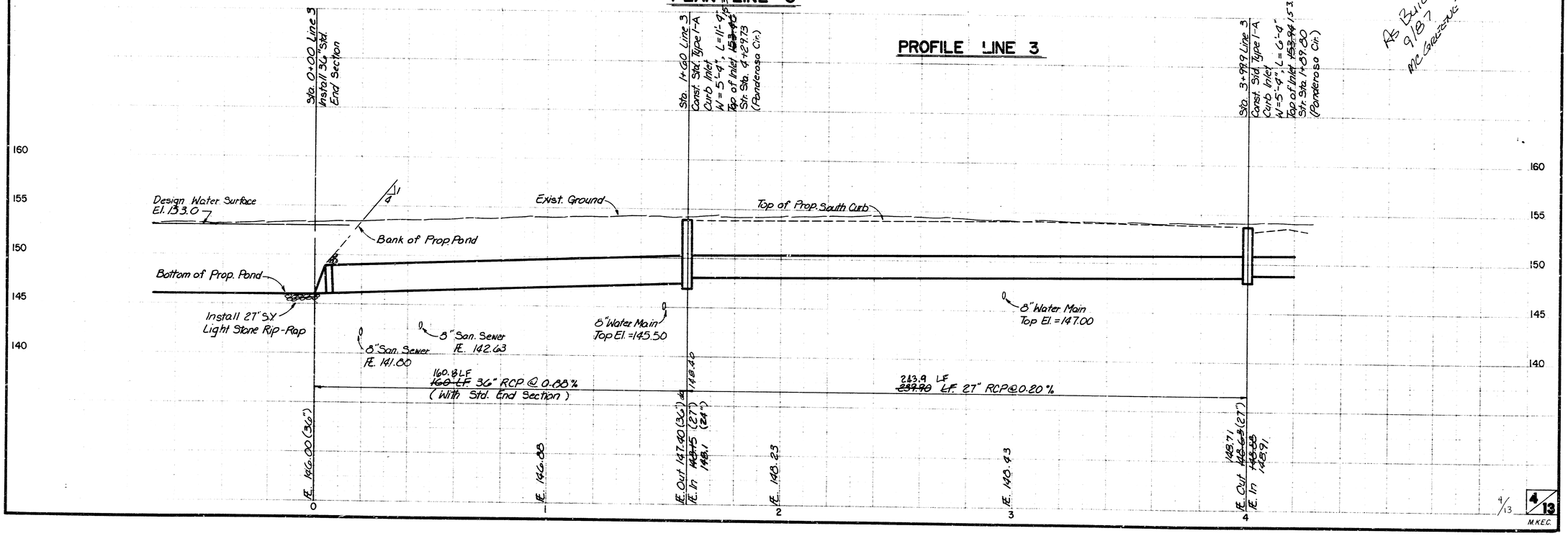

FILMED FROM THE BEST AVAILABLE COPY.....

HUNTINGTON PLACE
STORM WATER SEWER
PROJ-NO-448-76-245-81581-000-000-001

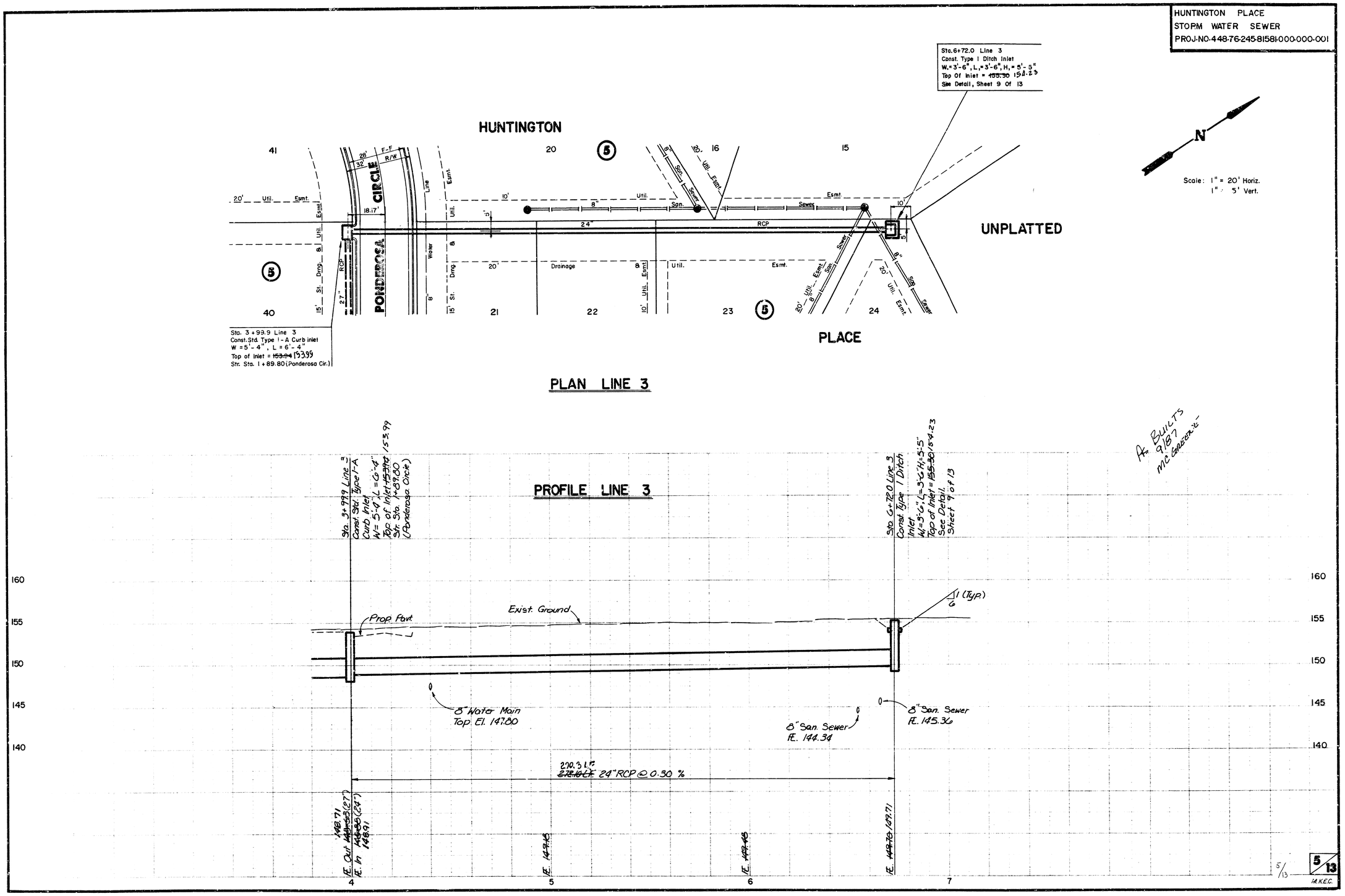

A. BUILTS
9/87
MC GREENE

5/13

M.K.E.C.

FILMED FROM THE BEST AVAILABLE COPY.....

HUNTINGTON PLACE
STORM WATER SEWER
PROJ-NO-44876-245-8581-000-000-001

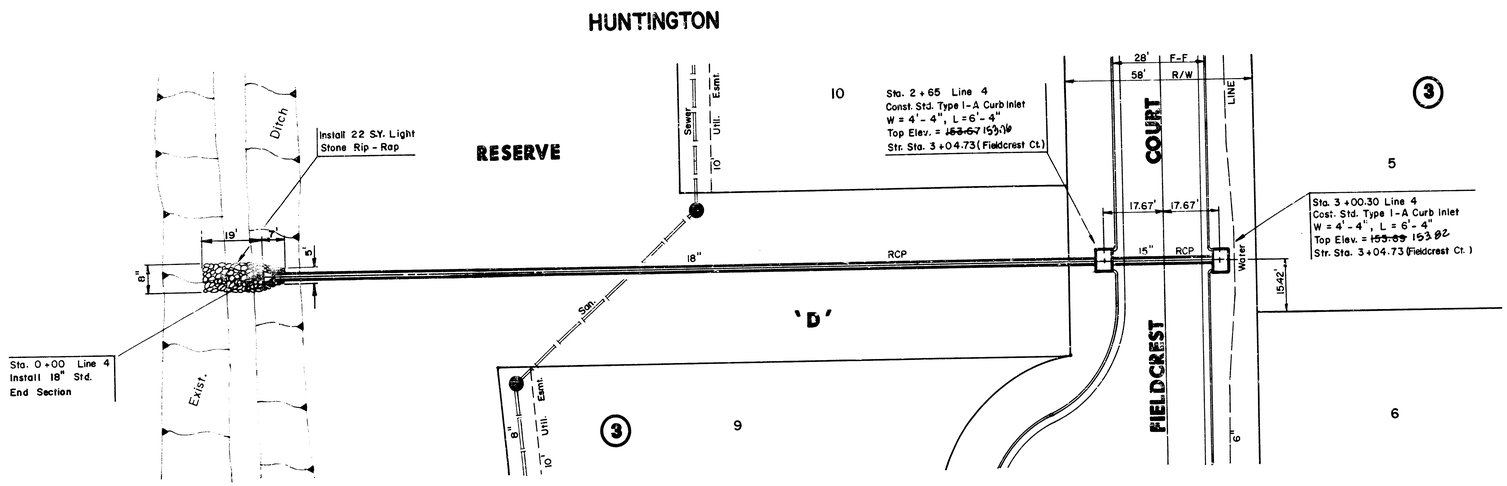



Scale : 1" = 20' Horiz.
1" = 5' Vert.

PLAN LINE 4

PROFILE LINE 4

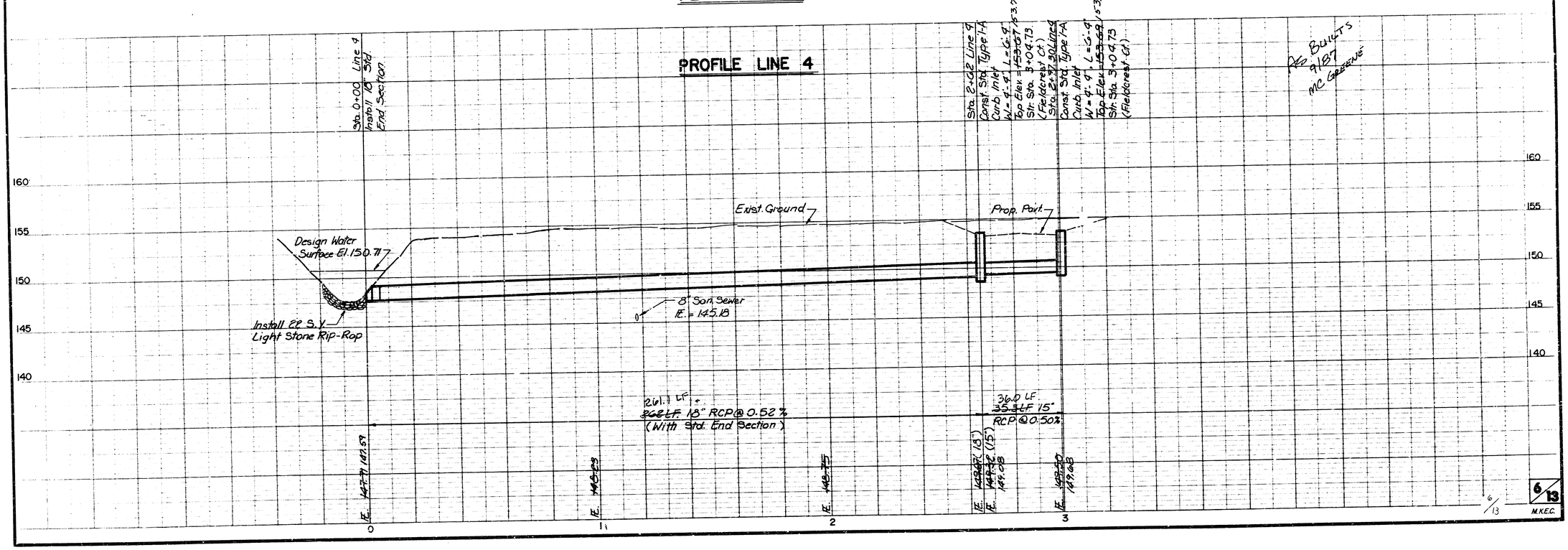

6/13
M.K.E.C.

FILMED FROM THE BEST AVAILABLE COPY....

HUNTINGTON PLACE
STORM WATER SEWER
PROJ-NO-44876-245-8158-000-000-001

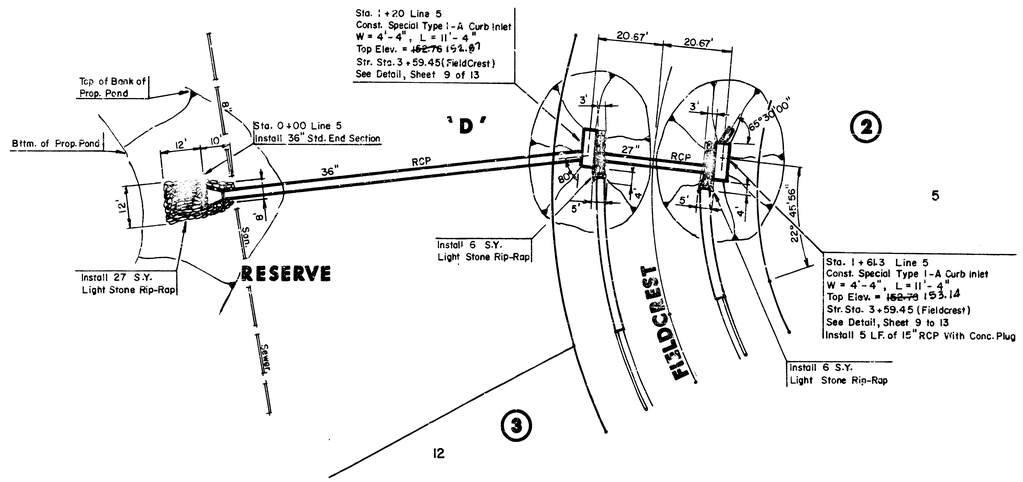

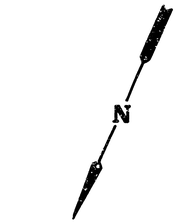

Scale: 1" = 20' Horiz.
1" = 5' Vert.

PLAN LINE 5

PROFILE LINE 5

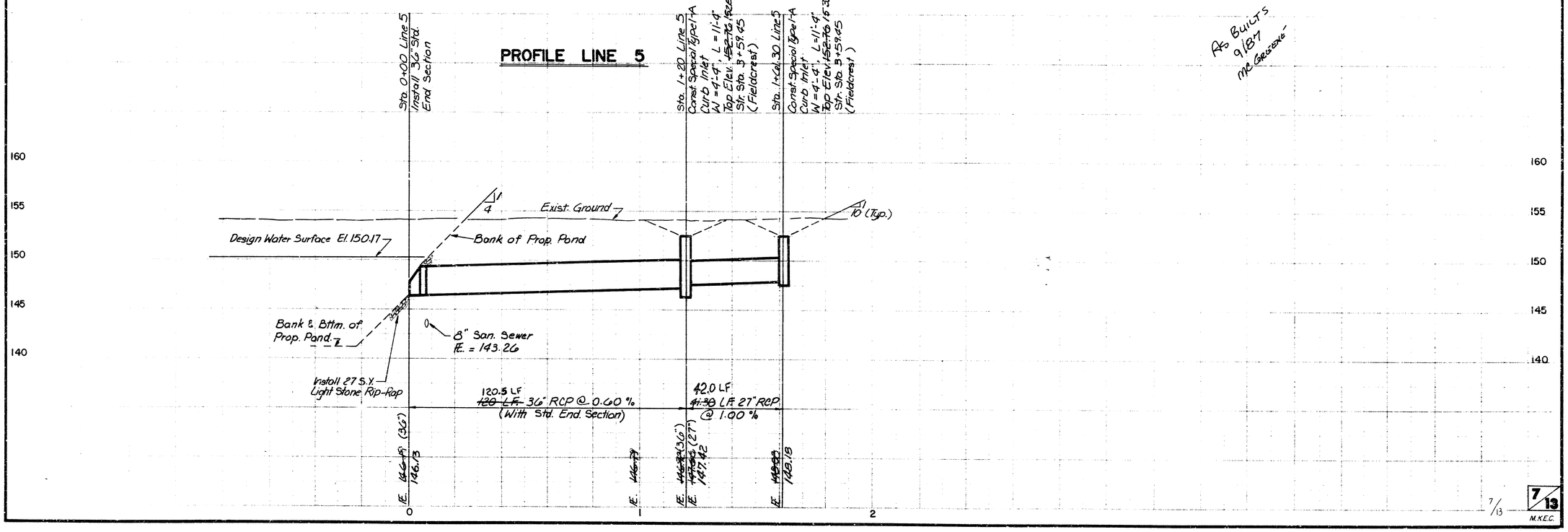

FILMED FROM THE BEST AVAILABLE COPY

SPECIAL REINFORCED CONCRETE MANHOLE 2-1

STATION 0 + 90, LINE 2

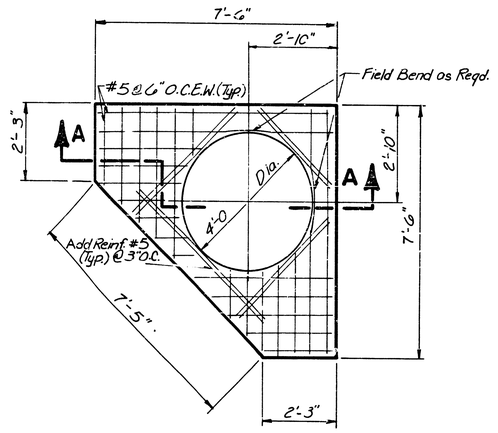

TOP SLAB PLAN

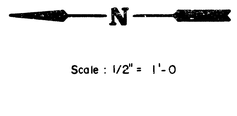

Scale : 1/2" = 1'-0

NOTE:
Reinforcing Shall be Cut as Required to Clear R.C.P.

PLAN VIEW

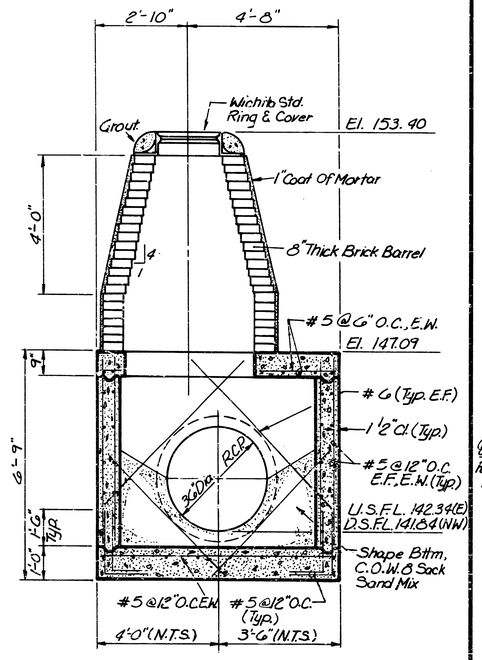

SECTION A

SPECIAL REINFORCED CONCRETE MANHOLE 2-2

STATION 2 +80 LINE 2

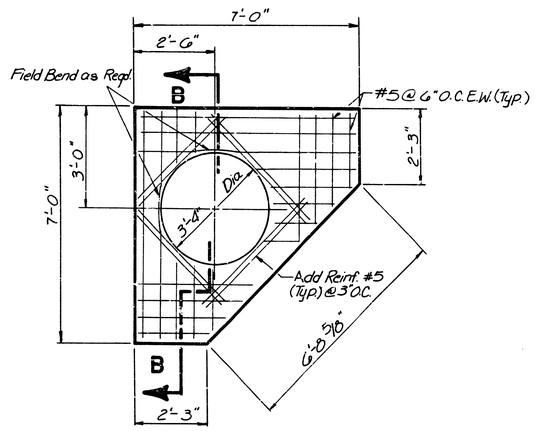

TOP SLAB PLAN

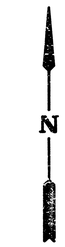

Scale : 1/2" = 1'-0"

NOTE:
Reinforcing Shall be Cut as Required to Clear R.C.P.

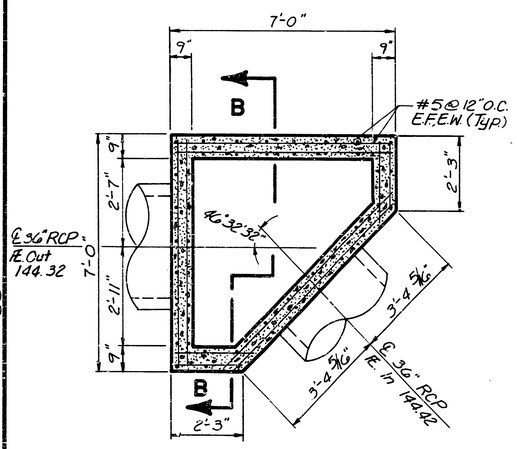

PLAN VIEW

SECTION B

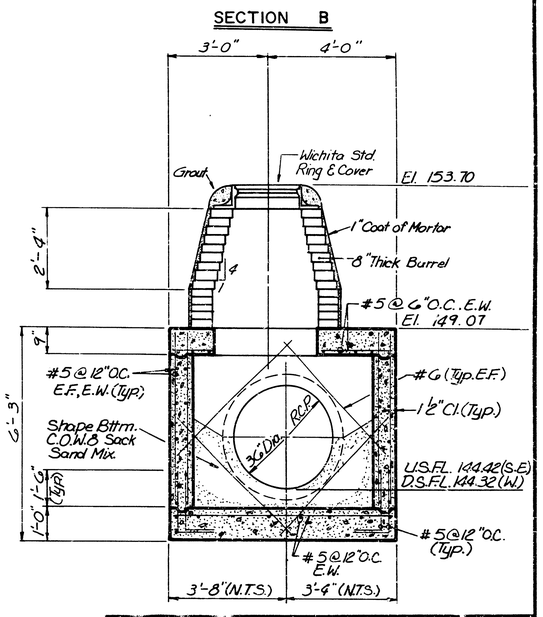

	HUNTINGTON PLACE
	S.W.S. DETAILS

Design
Drawn by
Checked by
Date
Job no.

MID-KANSAS ENGINEERING CONSULTANTS PA
3500 NORTH ROCK ROAD
BUILDING #200
WICHITA, KANSAS 67226
682-6561

8/13

Sheet 8 of 13

FILMED FROM THE BEST AVAILABLE COPY.....

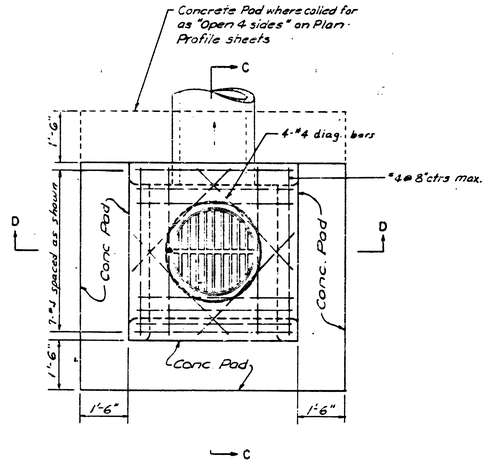

PLAN

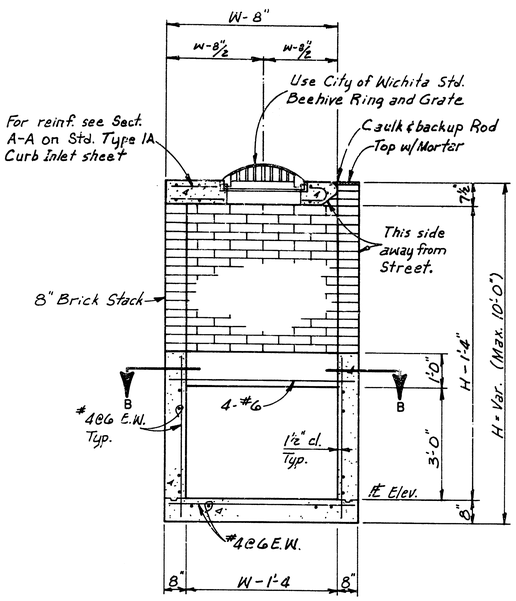

SECTION A-A

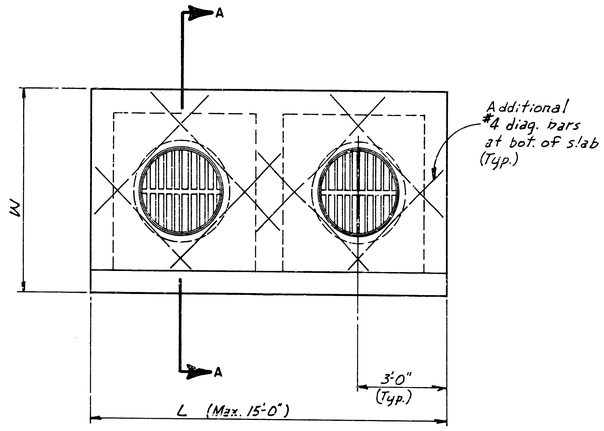

PLAN

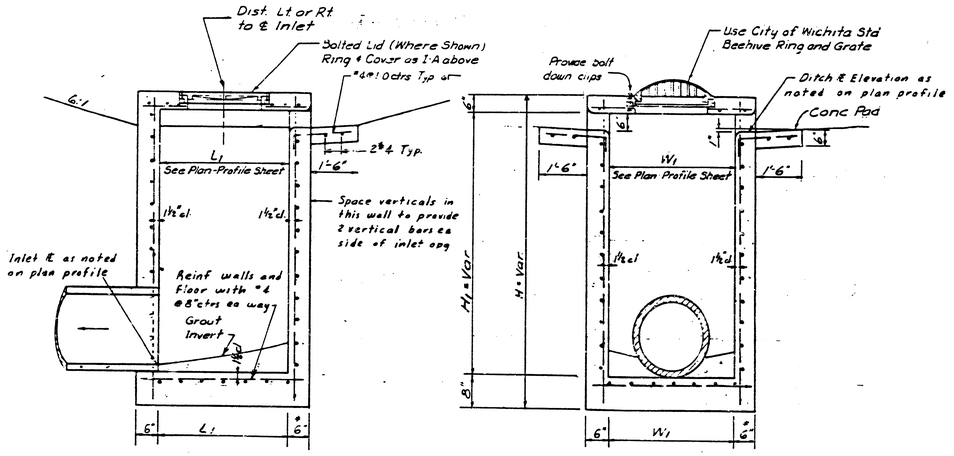

SECTION C-C
INLET-I

SECTION D-D

DITCH INLET TYPE I

* Where dimension "H" is greater than 6', use 8" wall thickness.

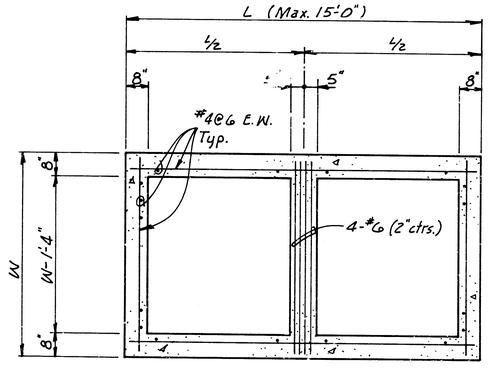

SECTION B-B

SPECIAL CURB INLET

	HUNTINGTON PLACE
	S.W.S. DETAILS
Design	
Drawn by	
Checked by	
Date	
Job no.	

MID-KANSAS ENGINEERING CONSULTANTS PA
3500 NORTH ROCK ROAD
BUILDING #800
WICHITA, KANSAS 67226
682-6561

9/13

Sheet 9 of 13

FILMED FROM THE BEST AVAILABLE COPY

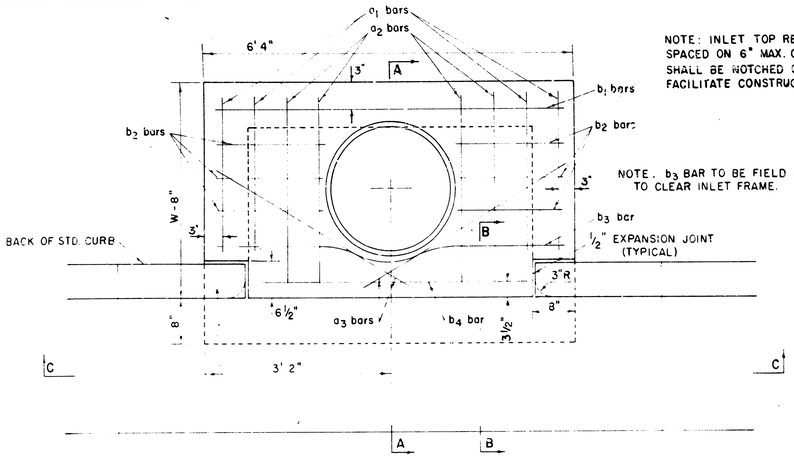

NOTE: INLET TOP REINFORCING SHALL BE SPACED ON 6" MAX. CENTERS. INLET LIDS SHALL BE NOTCHED OUT AS INDICATED TO FACILITATE CONSTRUCTION OF CURB.

WARP CURB TO MATCH INLET TOP WITH 1' MIN. TRANSITION LENGTH

PLAN

NOTE: CONCRETE TOPS TO BE INSTALLED ON THIN MORTAR CUSHION TO INSURE FULL SUPPORT ALONG BRICK WALLS. CONCRETE TOPS MAY BE CAST IN PLACE OR PRECAST. CONCRETE USED FOR INLET CONSTRUCTION SHALL BE CONCRETE PAVEMENT MIX.

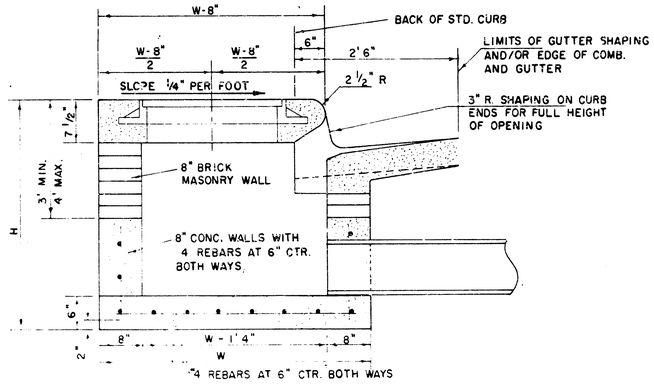

SECTION A-A

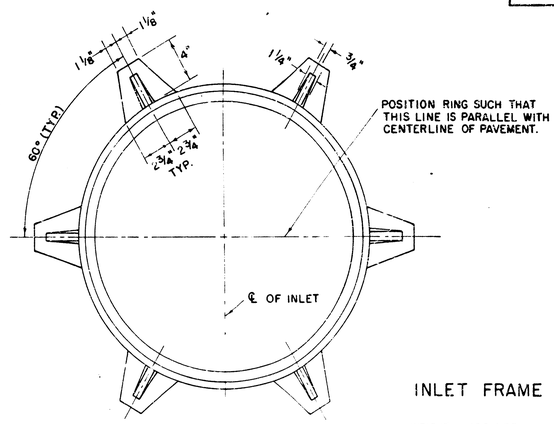

INLET FRAME

WEIGHT = 180 LBS.

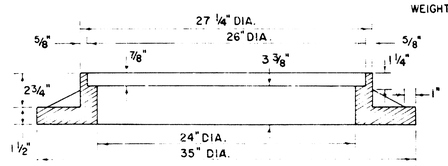

SEE CITY OF WICHITA STANDARD MANHOLE FRAME AND COVER DETAIL SHEET FOR COVER DETAILS TO BE USED WITH INLET FRAME.

STEEL SCHEDULE

	BAR	a_1	a_2	a_3	b_1	b_2	b_3	b_4	AT
	NUMBER	2	4	2	1	3	5	7	9	6	
	SIZE	#4	#4	#4	#4	#4	#4	#4	#4	#4	#6
LENGTH	W=4'4"	5'9"	6'11"	4'0"	6'1"	-	-	-	1'9"	6'2"	4'8"
	W=5'4"	7'9"	8'11"	5'0"	-	6'1"	-	-	1'9"	6'2"	4'8"
	W=6'4"	9'9"	10'11"	6'0"	-	-	6'1"	-	1'9"	6'2"	4'8"
	W=7'4"	11'9"	12'11"	7'0"	-	-	-	6'1"	1'9"	6'2"	4'8"
	W=8'4"	13'9"	14'11"	8'0"	-	-	-	6'1"	1'9"	6'2"	4'8"

NOTE a_3 BARS TO BE PLACED APPROX. 2" BELOW TOP OF INLET COVER.

W	STANDARD CURB INLET PRECAST TOPS PRECAST TOP SIZE	PIPE SIZE	CU YD CONC
4'4"	3'8" 6'4" 7 1/2"	2" & SMALLER	0.38
5'4"	4'8" 6'4" 7 1/2"	24" & 30"	0.51
6'4"	5'8" 6'4" 7 1/2"	36" & 42"	0.64
7'4"	6'8" 6'4" 7 1/2"	48" & 54"	0.77
8'4"	7'8" 6'4" 7 1/2"	60" & 66"	0.90

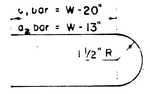

BENDING DIAGRAM

SECTION B-B

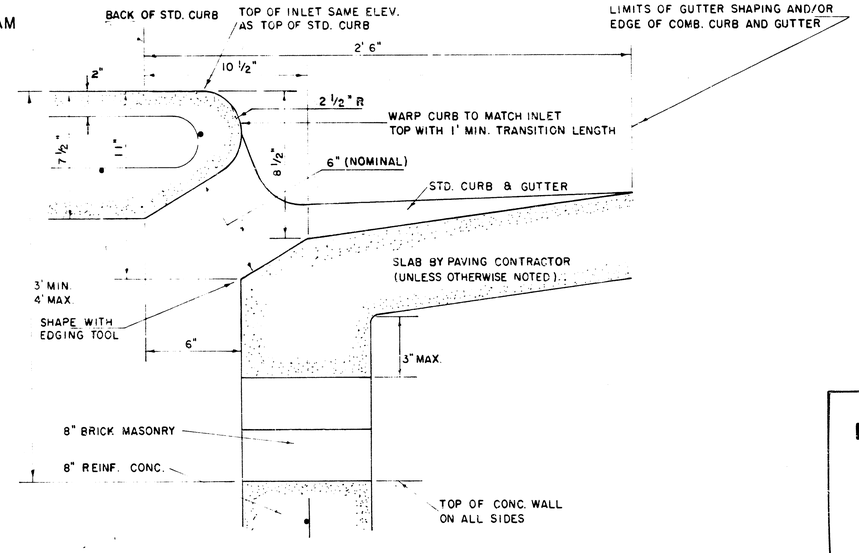

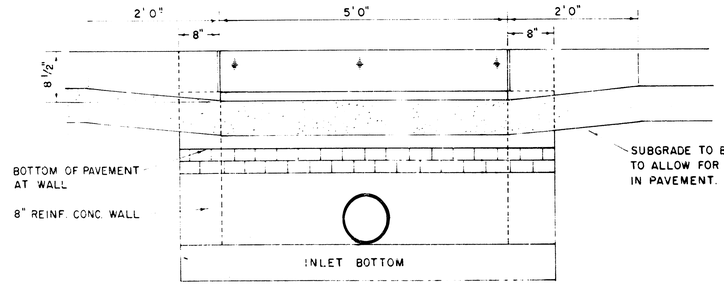

SECTION C-C

DETAIL STANDARD TYPE I CURB INLET

CITY OF WICHITA, KANSAS

INLET OPENING = 6" × 5'0"

MARCH 1984

10/13

10/13

FILMED FROM THE BEST AVAILABLE COPY....

FILMED FROM THE BEST AVAILABLE COPY ....

TYPE IA CURB INLET
DETAIL STANDARD

CITY OF WICHITA
M.E. LINDEBAK, CITY ENGINEER
OCTOBER 1984

INLET OPENING = 8" x 10'-0"

BENDING DIAGRAMS

SECTION C-C

SECTION B-B

ELEVATION

SECTION A-A

TYPICAL INLET SECT'N AT CENTER WALL (MASONRY WALLS)

TYPICAL INLET SECT'N AT CENTER WALL (REINFORCED CONCRETE WALLS)

SLAB AND FLOOR REINFORCING

MARK	SIZE	W=5'-9"		W=6'-9"		W=7'-9"		W=8'-9"	
		NO	LENGTH	NO	LENGTH	NO	LENGTH	NO	LENGTH
B	#5	12	6'-3½"	12	8'-5½"	12	10'-5½"	12	12'-5½"
B1	#5	5	6'-0"	5	8'-0"	5	10'-0"	5	12'-0"
B2	#5	50	2'-1"	50	2'-1"	50	2'-1"	50	2'-1"
D	#5	1	8'-0"	1	8'-0"	1	8'-0"	1	8'-0"
D1	#5	1	8'-0"	1	8'-0"	1	8'-0"	1	8'-0"
D2	#5	18	11'-1"	24	11'-1"	30	11'-1"	36	11'-1"

WALL REINFORCING

MARK	SIZE	W=5'-9"		W=6'-9"		W=7'-9"		W=8'-9"	
		NO	LENGTH	NO	LENGTH	NO	LENGTH	NO	LENGTH
C	#5	4	6'-1"	4	8'-1"	4	10'-1"	4	12'-1"
M1	#5	1	9'-1"	1	11'-1"	1	13'-1"	1	15'-1"
M2	#5	1	9'-1"	1	11'-1"	1	13'-1"	1	15'-1"
M3	#5	1	9'-1"	1	11'-1"	1	13'-1"	1	15'-1"

* Field bend or cut reinforcing as required for clearance

① 4 (H-0.7) @ 10.5 & 4 (W-1) @ H-(D+)

* A certain wall opening shall be provided by means of a section of reinforced concrete pipe. The minimum diameter used shall be that of the outlet pipe

Note: Concrete top to be installed on thin mortar cushion to insure full support along walls

Note: Bars to be field bent to clear Manhole ring

CAST IRON MANHOLE RING
TYPE D
W=180 lbs

Note: See SM No. for Std

COM: Manhole Cover

GENERAL NOTES

Concrete shall be COM Standard

Ramps MIN 4A except where shown too.

Finished MIN 4A except where shown too.

Reinforcing Bars shall be field bent or cut to clear pipes

All bars are at 6" spacing unless otherwise noted

Top slab shall be MIN 6 minimum clearance to 1½" rubber strip as shown

Floors of Inlet shall be swept with a 2 inch broom finish MIX concrete to increase uniform stability such that the inlet will be self cleaning pattern

All inlet bottom outlets pipe(s) The Contractor shall have the option of constructing 8" Brick Masonry walls between the concrete inlet base and top on this inlet MAX H=7'-0" or less and W=8'-4" or less

A 8-31A

FINAL PLAT OF
HUNTINGTON PLACE
AN ADDITION TO WICHITA, SEDGWICK COUNTY, KANSAS

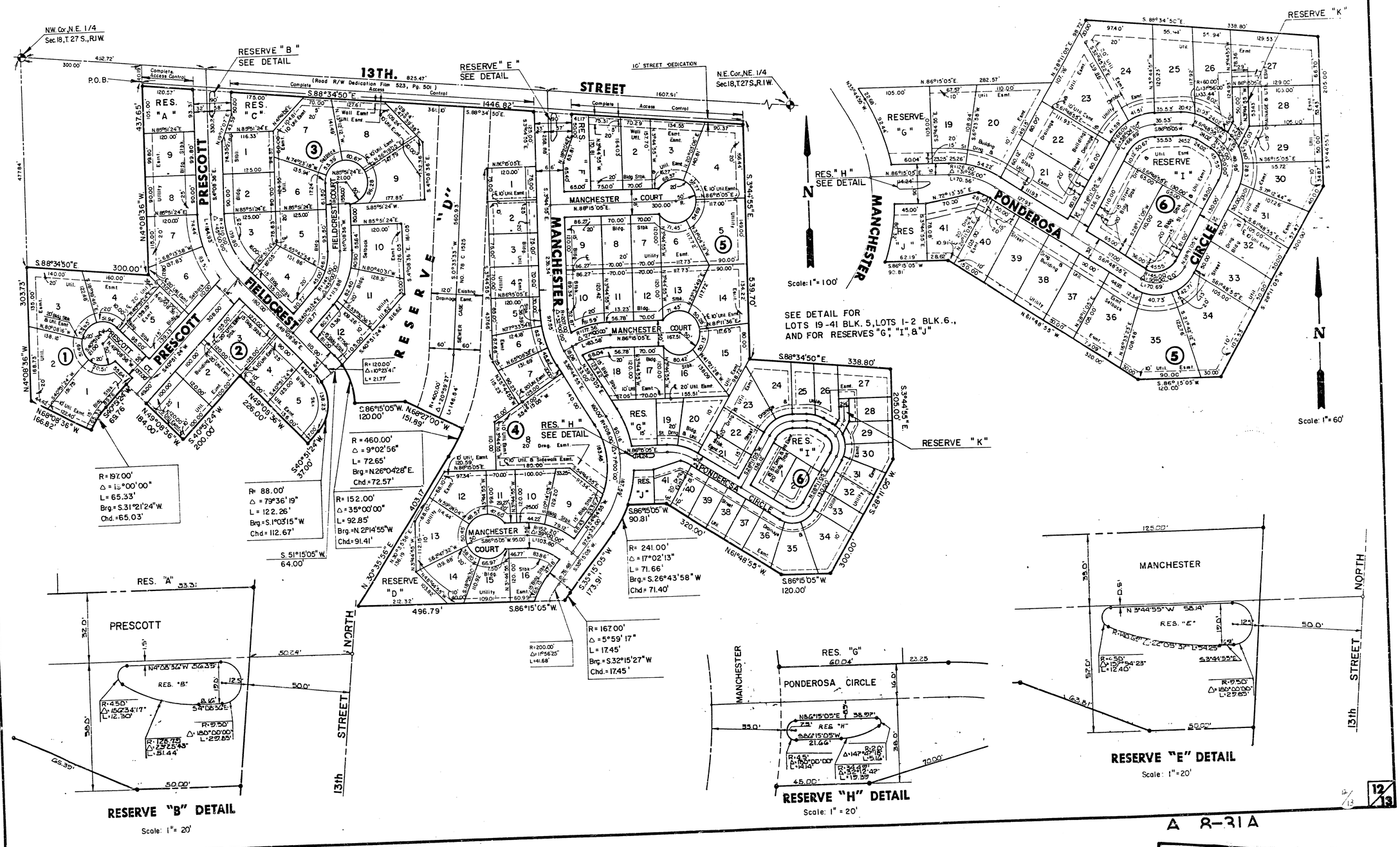

A 8-31A

FILMED FROM THE BEST AVAILABLE COPY....

A 8-31B

8-31B A

FINAL PLAT OF

HUNTINGTON PLACE

AN ADDITION TO WICHITA, SEDGWICK COUNTY, KANSAS

I, Kenneth H. Bengtson, a Civil Engineer in Kansas, do hereby certify that I have been in responsible charge of surveying and platting of "HUNTINGTON PLACE", an addition to Wichita, Sedgwick County, Kansas, into Lots, Blocks, Reserves, and Streets, the same being accurately set forth in the accompanying plat and described herein:

A tract of land lying in the Northeast Quarter, Section 18, Township 27 South, Range 1 West of the 6th P.M., more particularly described as follows: Commencing at the Northwest corner of said Northeast Quarter; thence S 88° 34' 50" E, 300.00 feet along the North line of said Northeast Quarter; thence S 4° 08' 36" E, 40.19 feet parallel with the West line of said Northeast Quarter to the point of beginning; thence S 88° 34' 50" E, 1446.82 feet parallel and 40.00 feet South of said North line to a point 68.75 rods West of the East line of said Northeast Quarter; thence S 3° 44' 55" E, 539.70 feet parallel with the east line of said Northeast Quarter; thence S 88° 34' 50" E, 338.80 feet parallel and 35.00 rods South of the North line of said Northeast Quarter; thence S 3° 44' 55" E, 205.00 feet; thence S 28° 11' 05" W, 300.00 feet; thence S 86° 15' 05" W, 120.00 feet; thence N 61° 48' 55" W, 320.00 feet; thence S 86° 15' 05" W, 90.81 feet to a point on a curve to the right; thence along said curve 71.66 feet, said curve having a central angle of 17° 02' 13", a radius of 241.00 feet, and a long cnord of 71.40 feet, bearing S 26° 43' 58" W; thence S 35° 15' 05" W, 173.91 feet to a point on a curve to the left; thence along said curve 17.45 feet, said curve having a central angle of 5° 59' 17", a radius of 167.00 feet, and a long chord of 17.45 feet, bearing S 32° 15' 27" W; thence S 86° 15' 05" W, 496.79 feet; thence N 30° 35' 56" E, 403.17 feet to a point on a curve to the left; thence along said curve 72.65 feet, said curve having a central angle of 9° 02' 56", a radius of 460.00 feet, and a long chord of 72.57 feet, bearing N 26° 04' 28" E; thence N 68° 27' 00" W, 151.89 feet; thence S 86° 15' 05" W, 120.00 feet to a point on a curve to the left; thence along said curve 92.85 feet, said curve having a central angle of 35° 00' 00", a radius of 152.00 feet, and a long chord of 91.41 feet, bearing N 21° 14' 55" W; thence S 51° 15' 05" W, 64.00 feet to a point on a curve to the right; thence along said curve 122.26 feet, said curve having a central angle of 79° 36' 19", a radius of 88.00 feet, and a long chord of 112.67 feet, bearing S 1° 03' 15" W; thence S 40° 51' 24" W, 37.00 feet; thence N 49° 08' 36" W, 226.00 feet; thence S 40° 51' 24" W, 200.00 feet; thence N 49° 08' 36" W, 184.00 feet; thence S 40° 51' 24" W, 69.76 feet to a point on a curve to the left; thence along said curve 65.33 feet, said curve having a central angle of 19° 00' 00", a radius of 197.00 feet, and a long chord of 65.03 feet, bearing S 31° 21' 24" W; thence N 68° 08' 36" W, 166.82 feet to a point on the west line of said Northeast Quarter; thence N 04° 08' 36" W, 303.73 feet along the West line of said Northeast Quarter to a point 477.84 feet South of the North line of said Northeast Quarter; thence S 88° 34' 50" E, 300.00 feet parallel with the North line of said Northeast Quarter; thence N 4° 08' 36" W, 437.65 feet parallel with the west line of said Northeast Quarter to the point of beginning.

I hereby certify that the details of this plat are correct to the best of my knowledge and belief this 11 day of June, 1986.

Kenneth H. Bengtson
Kenneth H. Bengtson, P.E.
Mid-Kansas Engineering Consultants, P.A.
3500 N. Rock Road, Building #800
Wichita, KS 67226

Know all men by these presents that we the undersigned property owners of the land as above set forth in the Civil Engineer's Certificate, have caused the same to be surveyed and platted into Lots, Blocks, Reserves, and Streets, the same to be known as "HUNTINGTON PLACE", an addition to Wichita, Sedgwick County, Kansas. The streets are hereby dedicated to and for the use of the public. Reserves are platted for the construction and maintenance of public utilities, drainage, landscaping, recreation, walks and open spaces. Reserves D & J are also platted for private Parks. Reserves A,C,D,F & J are also platted for walls. Reserves B & E are also platted for guardhouses. Reserves A through H & J are also platted for entry monument. Reserve K is platted for construction and maintenance of public utilities, drainage and a private drive to serve Lots 26, 27, 28, and 29, Block 5. The Reserves shall be owned and maintained by the Homeowners Association. Easements for the construction and maintenance of street, drainage and public utilities, as indicated on the accompanying plat, are hereby granted. The 5.00 feet wall easement is granted for the purpose of construction and maintenance of a private wall. All abutters rights of access to and from 13th Street over and across the North line of "HUNTINGTON PLACE" are hereby granted to the City of Wichita, Kansas. The sidewalk easement is platted for construction of a sidewalk to be maintained by the Homeowners Association.

A.I.C., INC., A Kansas Corporation

Keith L. Anderson, President

STATE OF KANSAS)
) SS:
SEDGWICK COUNTY)

Be it remembered that on this 11th day of June, 1986, before me a Notary Public in and for said State and County, came Keith L. Anderson, to me personally known to be the same person who executed the foregoing instrument of writing and duly acknowledged the execution of the same. In testimony whereof I have hereunto set my hand and affixed my notarial seal the day and year above written.

Joyce L. Kaufman, Notary Pubiic
My Appointment Expires: June 2, 1988

JOYCE I. KAUFMAN
NOTARY PUBLIC
STATE OF KANSAS
My Appt. Exp. 6-2-88

We, BANK IV Wichita, mortgagees on the above described property, do hereby consent to the plat of "HUNTINGTON PLACE".

BANK IV WICHITA

By: J.D. Newman, Vice-President

STATE OF KANSAS)
) ss:
SEDGWICK COUNTY)

Be it remembered that on this 12th day of June, 1986, before me a Notary Public in and for said State and County, came J.D. Newman, Vice-President, on behalf of BANK IV Wichita, to me personally known to be the same person who executed the foregoing instrument of writing and duly acknowledged the execution of the same. In testimony whereof I have hereunto set my hand and affixed my notarial seal the day and year above written.

Lonneta L. Madden, Notary Public
My Appointment Expires: June 5, 1990

LONNETA L. MADDEN
NOTARY PUBLIC
STATE OF KANSAS
MY APPT. EXPIRES 6-5-90

This plat of "HUNTINGTON PLACE" has been submitted to and approved by the Wichita-Sedgwick County Metropolitan Area Planning Commission, Wichita, Kansas.

Dated this 29TH day of May, 1986.

WICHITA-SEDGWICK COUNTY METROPOLITAN AREA PLANNING COMMISSION

David Boyouth, Vice-Chairman

Michael L. Lindebak, Secretary

This plat approved and all dedications shown hereon, if any, accepted by the City Commission of the City of Wichita, Kansas, this 24TH day of JUNE, 1986.

Tony Casado, Mayor

Donald C. Gisick, City Clerk

Entered on transfer record this 1 day of July, 1986.

Don Wright, County Clerk

STATE OF KANSAS)
) SS:
SEDGWICK COUNTY)

This is to certify that this instrument was filed for record in the Register of Deeds office this 2nd day of July, 1986.

Pat Kettler, Register of Deeds

Ed Resa, Deputy

* 815835

20.00

A 8-31B

FILMED FROM THE BEST AVAILABLE COPY