STORM SEWER PLANS FOR
NORTHROCK BUSINESS PARK PHASE 2
S.W.S. NO. 322
PROJECT NO.
468·76·245·81623 ·000·000·001

CITY OF WICHITA, KANSAS
MICHAEL E. LINDEBAK, CITY ENGINEER

GENERAL NOTES

1. ALL CONCRETE SHALL BE STANDARD PAVING MIX UNLESS OTHERWISE NOTED.
2. THE CONTRACTOR SHALL BE RESPONSIBLE FOR PRESERVING PROPERTY IRONS. THE CONTRACTOR SHALL BE REQUIRED TO RE-ESTABLISH ANY PROPERTY IRONS WHICH ARE DAMAGED OR DESTROYED BY HIS CONSTRUCTION OPERATIONS. SUCH IRONS SHALL BE RE-ESTABLISHED BY A LICENSED LAND SURVEYOR OR A LICENSED PROFESSIONAL ENGINEER IN ACCORDANCE WITH STATE LAWS.
3. TREES TO BE REMOVED ARE MARKED. ALL TREES WHICH IN THE OPINION OF THE FIELD ENGINEER CAN BE SAVED, SHALL BE SAVED.
4. CONTRACTOR SHALL NOTIFY THE UTILITY COMPANIES OF CONSTRUCTION SCHEDULING.
5. EXISTING UTILITIES AND THEIR LOCATIONS, AS SHOWN ON THE PLANS, REPRESENT THE BEST INFORMATION OBTAINABLE FOR DESIGN. LOCATION INFORMATION HAS BEEN OBTAINED FROM THE VARIOUS UTILITY COMPANIES AND IS EITHER FROM COMPANY RECORD DRAWINGS OR COMPANY PROVIDED FIELD LOCATIONS. THE PLAN LOCATIONS SHOWN ARE NOT GUARANTEED. ADDITIONAL EXISTING UTILITIES MAY ALSO BE ENCOUNTERED.

CONTRACTOR SHALL NOTIFY THE FOLLOWING COMPANIES PRIOR TO ANY EXCAVATION:

ARKLA GAS COMPANY	942-8350
BELL TELEPHONE	268-2256
CABLEVISION	269-3340
GAS SERVICE COMPANY	263-7511
KANSAS GAS & ELECTRIC	261-6375
KANSAS ONE-CALL	1-800-344-7233
CITIES SERVICE	524-0491
KANSAS GAS SUPPLY	1-316-254-7243
CONTINENTAL PIPELINE COMPANY	1-316-681-2081
CO-OP REFINERY PIPELINE	1-316-221-2107

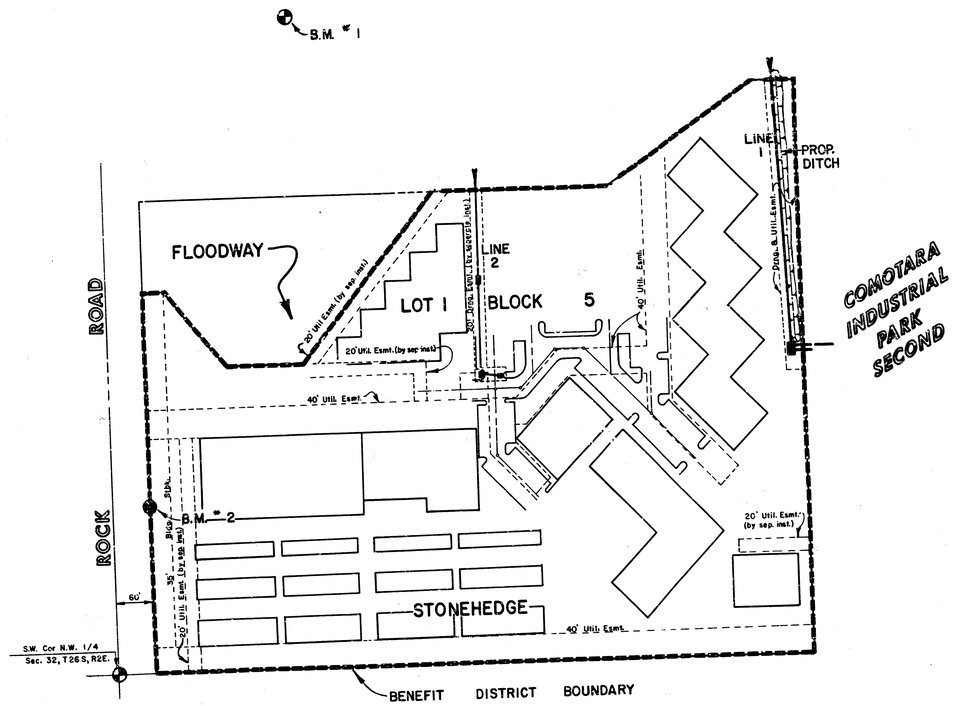

INDEX TO DRAWINGS

SHEET NO.	DESCRIPTION
1	TITLE SHEET
2	PLAN LINE 1
3	PLAN LINE 2
4	STD. DETAILS - REINF. CONC. MANHOLE
5	CURB INLET DETAILS
6	DROP INLET DETAILS
7	FINAL PLAT

N

SCALE: 1" = 100'

As Builts 10/87 McGreene W'89

BENCH MARKS

B.M. #1 " □ " on Northeast side of driveway, Building #600, 3500 North Rock Road.
Elev. = 204.46

B.M. #2 " + " cut on Northeast corner of concrete Driveway entrance to Storage Units. "+" cut is 60' East and 246' North of the West ¼ corner of Section 32, T 26 S, R 2 E.
Elev. = 202.96

NORTHROCK BUSINESS PARK PHASE 2
STORM WATER SEWER PLANS

Design: FBN
Drawn by: DDG
Checked by:
Date: JAN. 5, 1987
Job no:

MID-KANSAS ENGINEERING CONSULTANTS PA
3500 NORTH ROCK ROAD
BUILDING #800
WICHITA, KANSAS 67226
682-6561

Sheet 1 of 7 1/7

FILMED FROM THE BEST AVAILABLE COPY

NORTHROCK BUSINESS PARK
STORM WATER SEWER
PROJ. NO. 468-76245-81623-000000-001

N

Scale: 1"= 20' Horiz.
1"= 5' Vert.

Sta. 0+00 Line 1
Install 36" End Section

Sta. 0+10.0, Line 1
Begin Ditch, 6' Left

Remove 18 S.Y. Exist. Rip-Rap

Exist. Rip-Rap

Shape Existing Channel to Drain from Prop. Pipe (Cost Subsidiary to Proj.)

Install 40 S.Y. Light Stone Rip-Rap

Existing ℄ Ditch

Drainage

36" R.C.P

Utility Easement

Remove Exist. Wash Check

92° 28' 03"

Exist. Ditch

Exist. 18" R.C.P. From 34th Street Court No.

Sta. 4+27.7
Remove Exist. End Section & Const. Special Reinf. Conc. MH Top of MH = 211.30 See Detail Sheet 4 of 7

3'-9⅛" IE Elev. = 204.77
Install TEMP. Plug (Cost Subsidiary to Pipe)

10 L.F. x21" L.F. 21" R.C.P @ 1.42 %

30'-6"

87° 31' 57"

Sta. 4+05.0, Line 1
End Ditch, 6' Left

NOTE: Existing Ditch to be Filled & Compacted to 95% Density to Match Existing Adjacent Ground Elevations After Pipe is Laid. Cost Subsidiary to Project. Proposed Ditch Shall Then be Constructed. Proposed Ditch Shall be Seeded & Mulched. Cost Subsidiary to Project

PLAN LINE 1

DITCH DETAIL

PROFILE LINE 1

Sta. 0+00 Line 1 End Section
Install 36" End Section
Sta. 0+10.0 Line 1
Begin Ditch, 6' Left

Sta. 4+05.0 Line 1
End Ditch, 6' Left

Sta. 4+27.7 Line 1
Remove Exist. End Section & Const. Special Reinf. Conc. MH
Concrete Manhole
Top of Manhole Elev. = 211.30

Design Water Surface Elev. = 207.33

Existing Top Of East Bank

Proposed Ditch IE

Exist. Rip-Rap

Install 40 S.Y. Light Stone Rip-Rap

Remove Existing Wash Check

Existing IE Of Ditch

Exist IE Over Proposed Pipe

395 L.F. Ditch @ 0.30%
(Bottom Width = 4'-0", Side Slopes = 4:1)

MAY BE
~~428 L.F.~~ 36" R.C.P. @ 0.30% with End Section

215
210
205
200
195

0 1 2 3 4

2/7

M.K.E.C.

FILMED FROM THE BEST AVAILABLE COPY

NORTHROCK BUSINESS PARK PHASE 2
STORM WATER SEWER NO. 322
PROJ. NO. 468-76-245-81623-000-000-001

N

SCALE:
1" = 20', Horiz.
1" = 5', Vert.

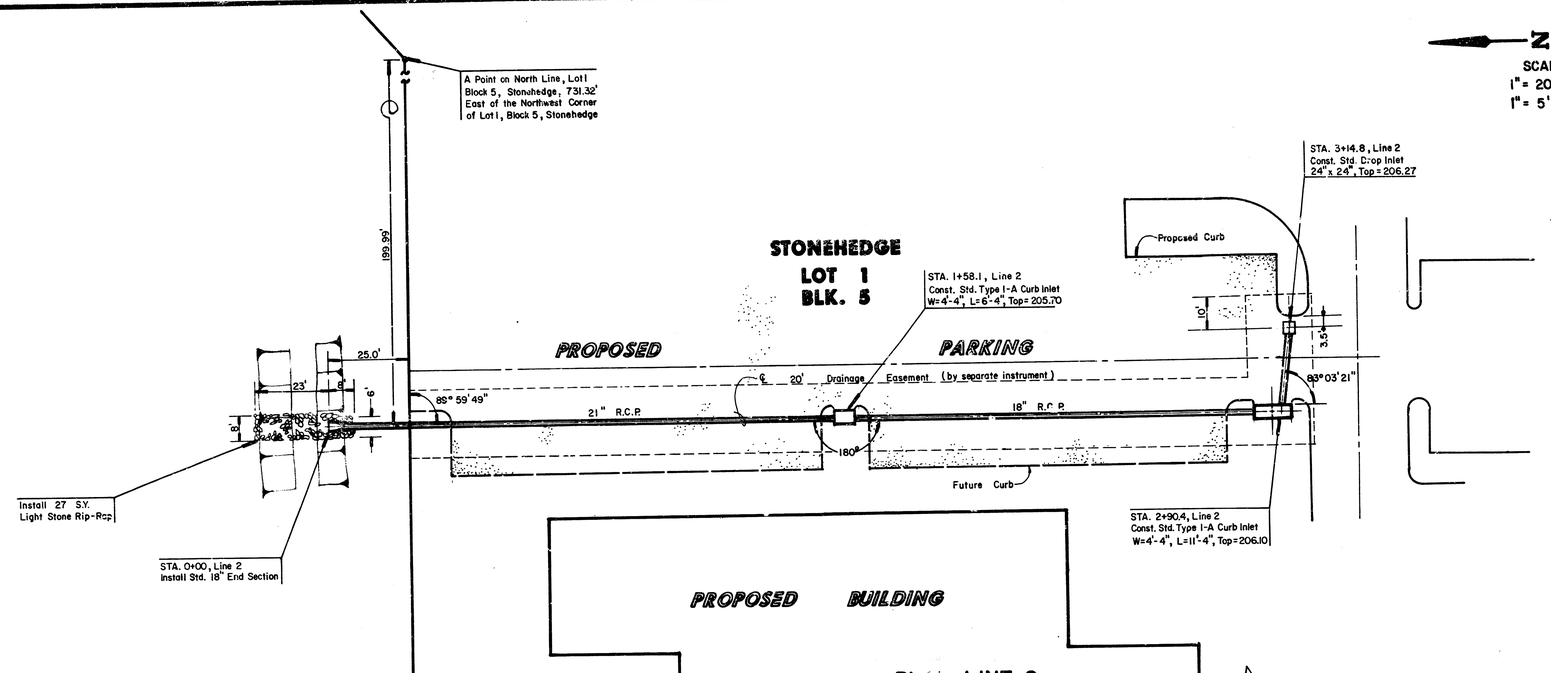

PLAN LINE 2

PROFILE LINE 2

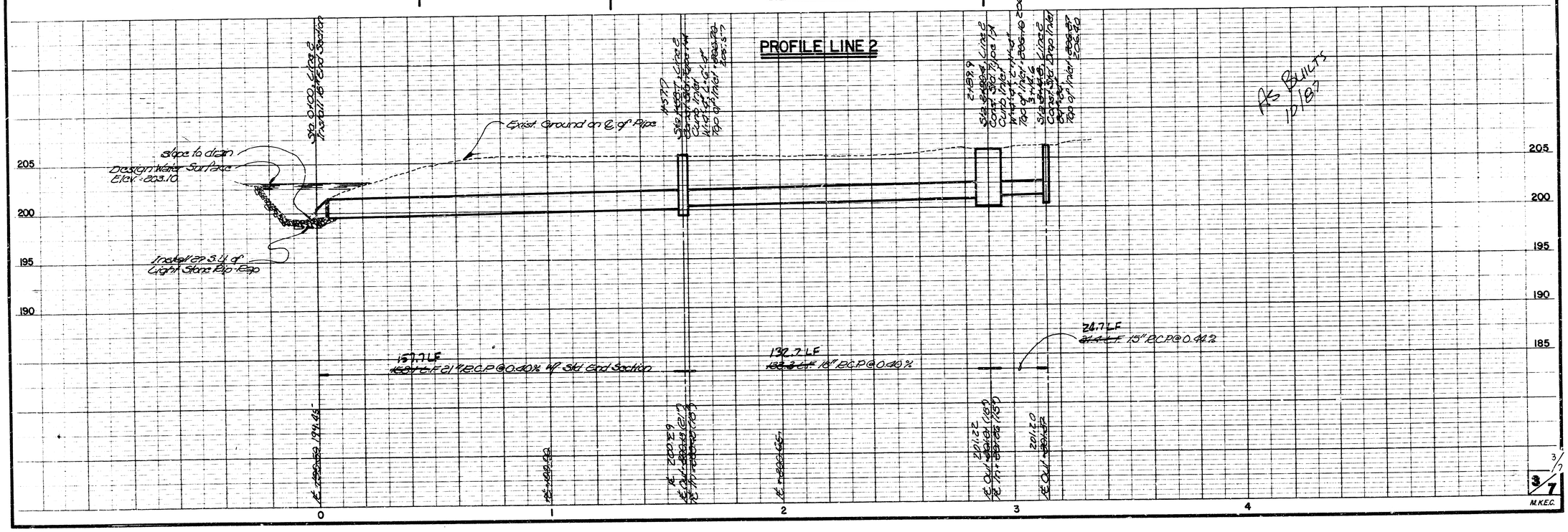

3/7

M.K.E.C.

FILMED FROM THE BEST AVAILABLE COPY

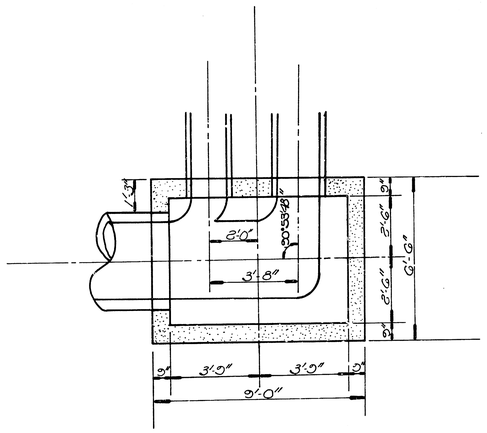

REINFORCED CONCRETE MANHOLE
(STA. 4+22.0, LINE I)
(Reinforcing Omited from Detail for Clarity)

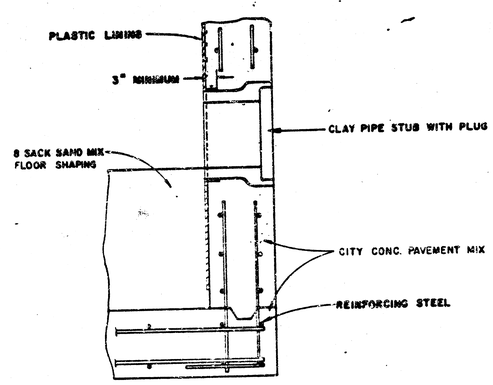

V. C. P. CONNECTION DETAIL
SANITARY SEWER ONLY

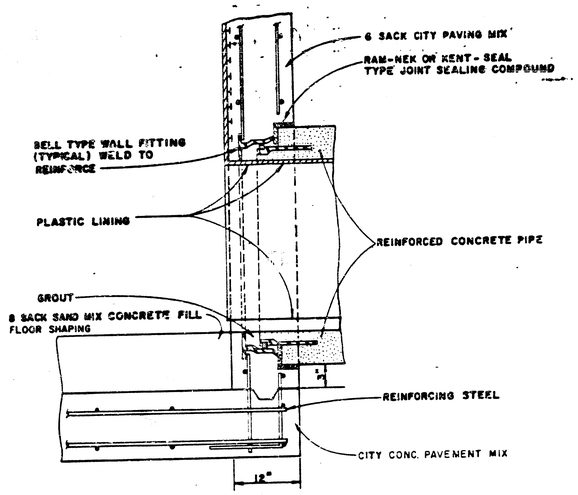

R. C. P. CONNECTION DETAIL
SANITARY SEWER ONLY

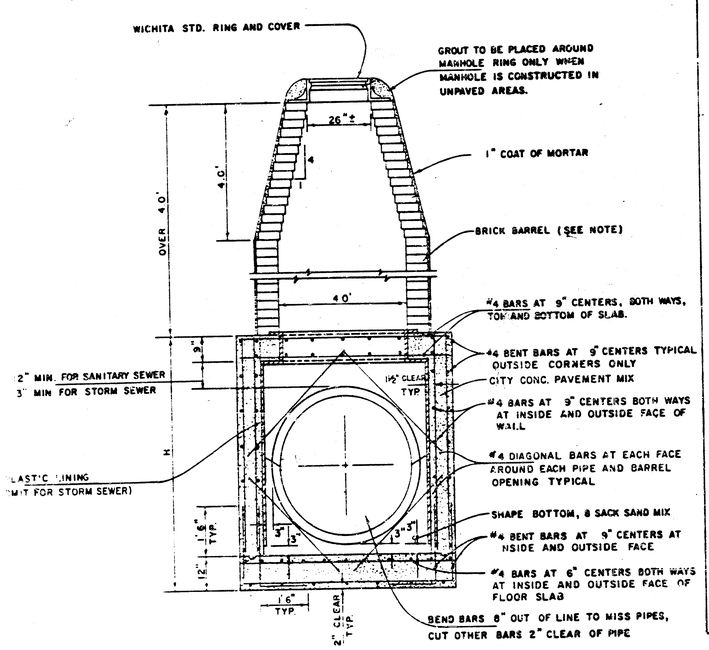

REINFORCED CONCRETE MANHOLE
DEPTH OF STACK: OVER 4.0'
SCALE 1" = 2'

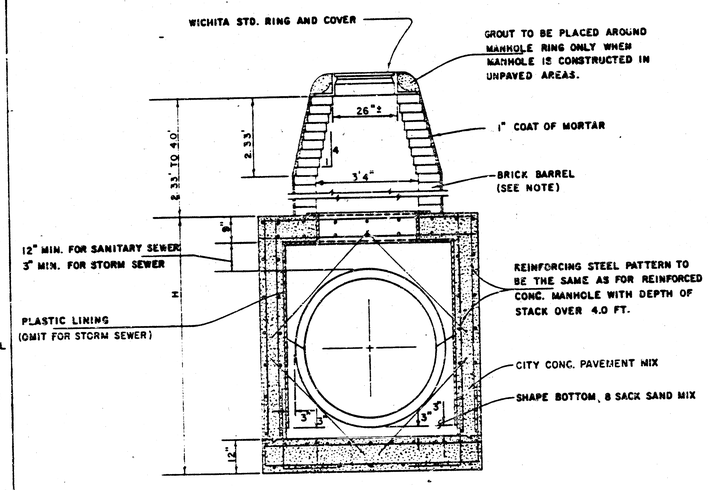

REINFORCED CONCRETE MANHOLE
DEPTH OF STACK: 2.33' TO 4.0'
SCALE 1" = 2'

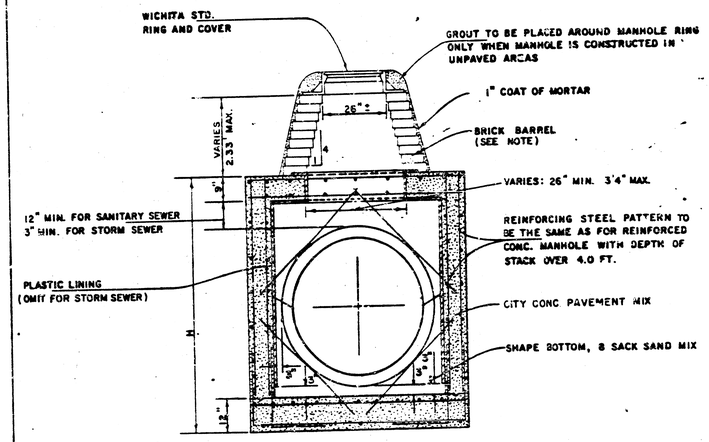

REINFORCED CONCRETE MANHOLE
DEPTH OF STACK: 0' TO 2.33'
SCALE 1" = 2'

NOTE :
BRICK BARRELS LESS THEN 15' DEEP SHALL HAVE 8" WALLS EXCEPT WHEN LOCATED WITHIN PUBLIC STREET OR ALLEY PAVEMENT THEN THE WALL SHALL BE 12" BRICK BARRELS MORE THEN 16' DEEP SHALL HAVE 12" WALLS. THE "L" AND "W" DIMENSIONS SHALL BE A MINIMUM OF 5'6" FOR BRICK BARRELS WITH 8" WALLS AND 6'2" FOR BRICK BARRELS WITH 12" WALLS WHEN THE BRICK BARRELS ARE OVER 4 FT. IN HEIGHT.

STANDARD DETAILS
REINFORCED CONCRETE MANHOLES 4/7
CITY OF WICHITA
FEBRUARY 1984
4/7

FILMED FROM THE BEST AVAILABLE COPY ····

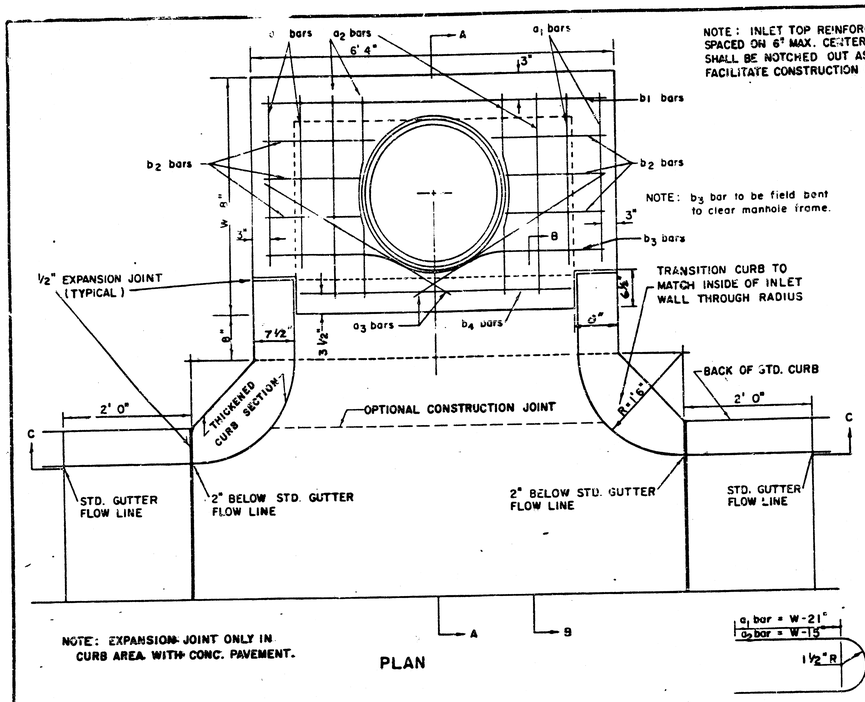

NOTE: EXPANSION JOINT ONLY IN CURB AREA WITH CONC. PAVEMENT.

PLAN

NOTE: INLET TOP REINFORCING SHALL BE SPACED ON 6" MAX. CENTERS. INLET LIDS SHALL BE NOTCHED OUT AS INDICATED TO FACILITATE CONSTRUCTION OF CURB.

NOTE: b_3 bar to be field bent to clear manhole frame.

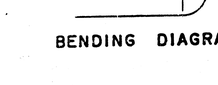

BENDING DIAGRAM

STEEL SCHEDULE

BAR		a_1	a_2	a_3*	b_1 W=4'4"	b_1 W=5'4"	b_1 W=6'4"	b_1 W=7'4"	b_1 W=8'4"	b_2	b_3	b_4	WT. LBS.
NUMBER		4	4	2	1	3	5	7	9	6	1	1	
SIZE		#4	#4	#4	#4	#4	#4	#4	#4	#4	#4	#6	
LENGTH	W=4'4"	5'7"	6'7"	4'0"	6'1"	–	–	–	–	1'9"	6'2"	4'6"	60±
	W=5'4"	7'7"	8'7"	5'0"	–	6'1"	–	–	–	1'9"	6'2"	4'8"	81±
	W=6'4"	9'7"	10'7"	6'0"	–	–	6'1"	–	–	1'9"	6'2"	4'8"	101±
	W=7'4"	11'7"	12'7"	7'0"	–	–	–	6'1"	–	1'9"	6'2"	4'8"	121±
	W=8'4"	13'7"	14'7"	8'0"	–	–	–	–	6'1"	1'9"	6'2"	4'8"	141±

* NOTE: a_3 BARS TO BE PLACED APPROX. 2" BELOW TOP OF INLET COVER

STANDARD CURB INLET PRECAST TOPS			
W	PRE-CAST TOP SIZE	PIPE SIZE	CU. YD. CONC.
4' 4"	5'8" x 6'4" x 7 1/2"	21" & SMALLER	0.38 ±
5' 4"	4'8" x 6'4" x 7 1/2"	24" & 30"	0.51 ±
6' 4"	5'8" x 6'4" x 7 1/2"	36" & 42"	0.64 ±
7' 4"	6'8" x 6'4" x 7 1/2"	48" & 54"	0.77 ±
8' 4"	7'8" x 6'4" x 7 1/2"	60" & 66"	0.90 ±

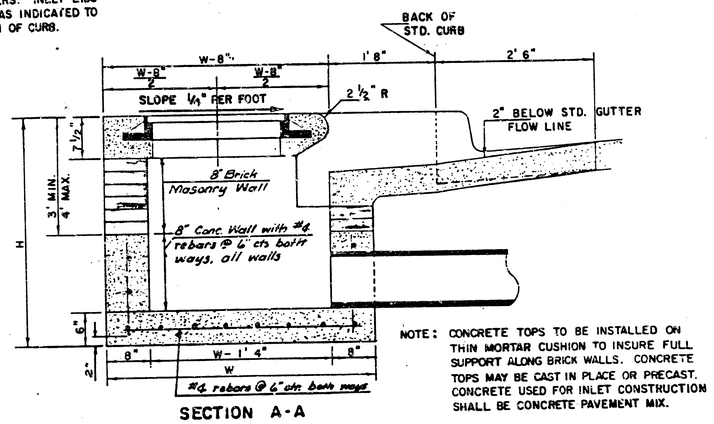

SECTION A-A

NOTE: CONCRETE TOPS TO BE INSTALLED ON THIN MORTAR CUSHION TO INSURE FULL SUPPORT ALONG BRICK WALLS. CONCRETE TOPS MAY BE CAST IN PLACE OR PRECAST. CONCRETE USED FOR INLET CONSTRUCTION SHALL BE CONCRETE PAVEMENT MIX.

NOTE: CONTRACTOR SHALL HAVE THE OPTION OF CONSTRUCTING 8" BRICK MASONRY WALLS BETWEEN THE CONCRETE INLET BASE AND TOP ON THIS INLET WHEN W = 4'4" AND H = 6'6" OR LESS.

ADDITIONAL CURB AND GUTTER CONSTRUCTION NECESSARY TO CONNECT SET-BACK INLET TO PAVEMENT WILL BE PAID FOR AT THE UNIT PRICE BID FOR EACH INLET HOOKUP.

INLET INVERT SHALL BE SHAPED WITH 8 SACK SAND MIX CONCRETE TO CREATE FLOW CHANNELS AND TO INCREASE HYDRAULIC EFFICIENCY SUCH THAT THE INLET WILL BE SELF CLEANING BETWEEN ALL INLET AND/OR OUTLET PIPES.

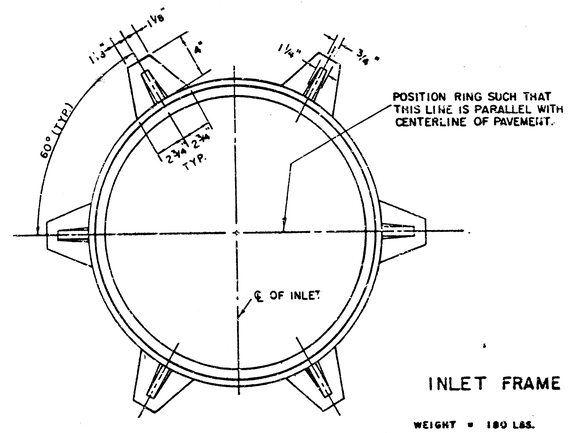

INLET FRAME

WEIGHT = 180 LBS.

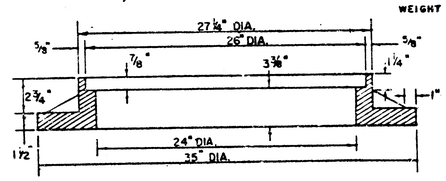

SEE CITY OF WICHITA STANDARD MANHOLE FRAME AND COVER DETAIL SHEET FOR COVER DETAILS TO BE USED WITH INLET FRAME.

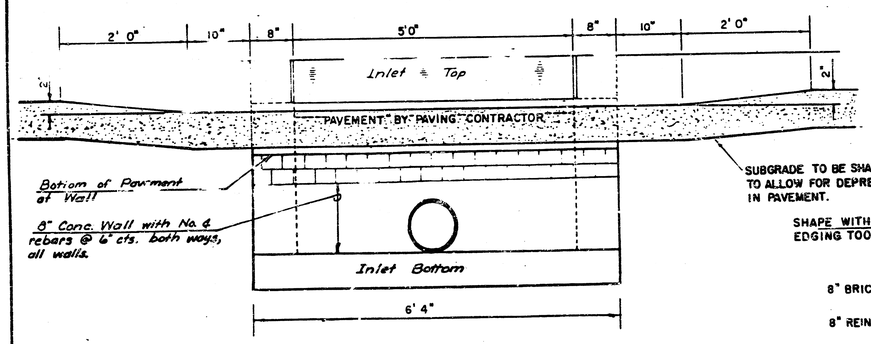

SECTION C-C

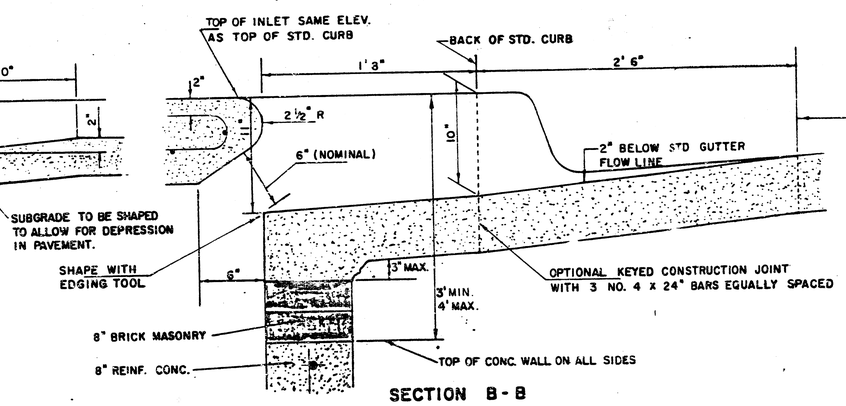

SECTION B-B

DETAIL STANDARD TYPE IA CURB INLET

CITY OF WICHITA, KANSAS

INLET OPENING = 6" x 5' 0"

JUNE 1984

5/7

FILMED FROM THE BEST AVAILABLE COPY

NOTE: Grates shall be imprinted on the top surface with "CITY OF WICHITA" using letters at least 1" in height. Other marking methods may be used only if approved by the engineer.

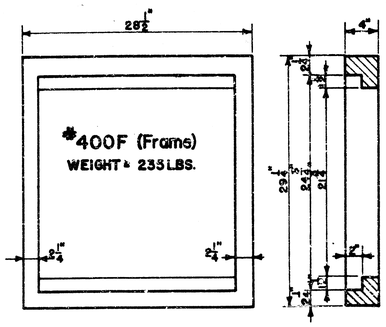

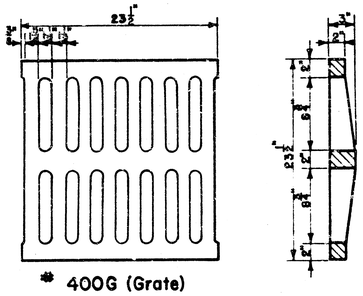

24"x24" Frame & Grate Detail

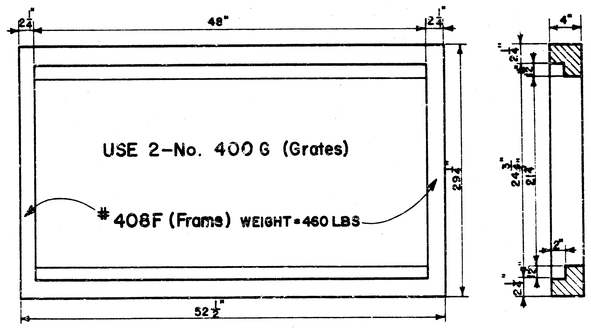

Double 24"x24" Frame Detail

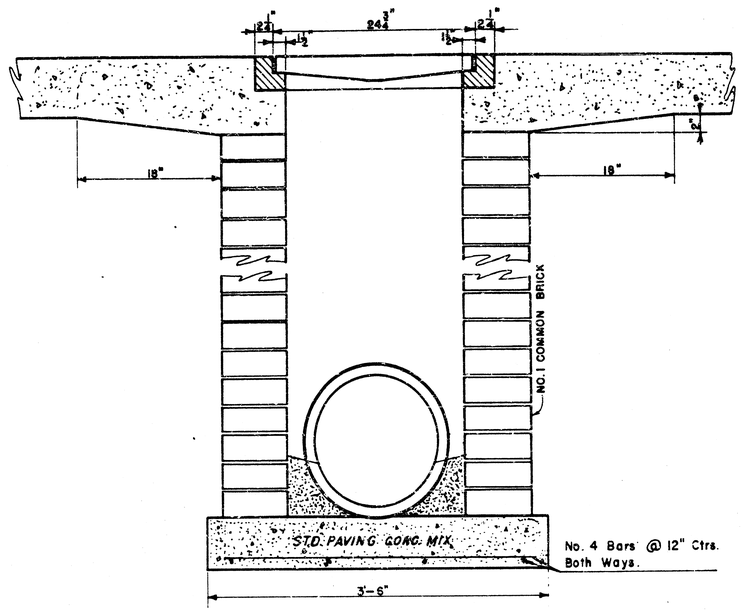

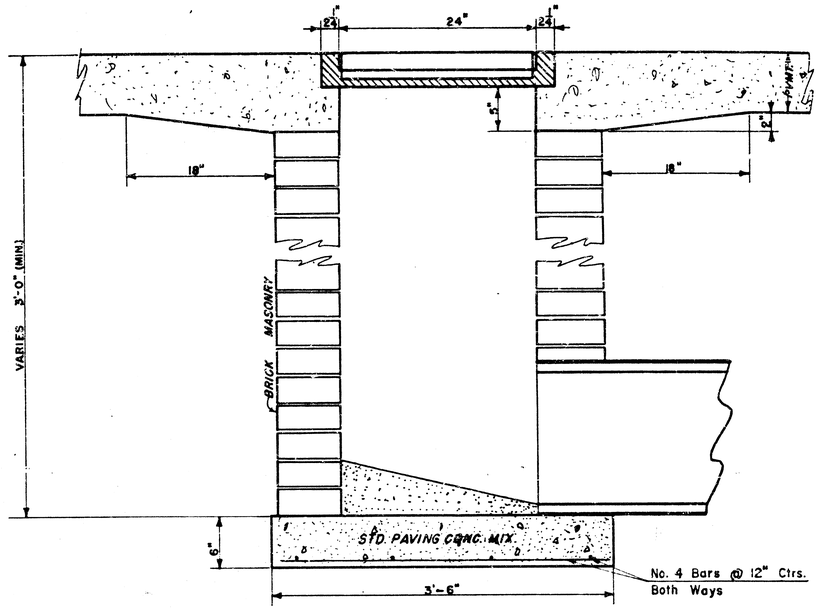

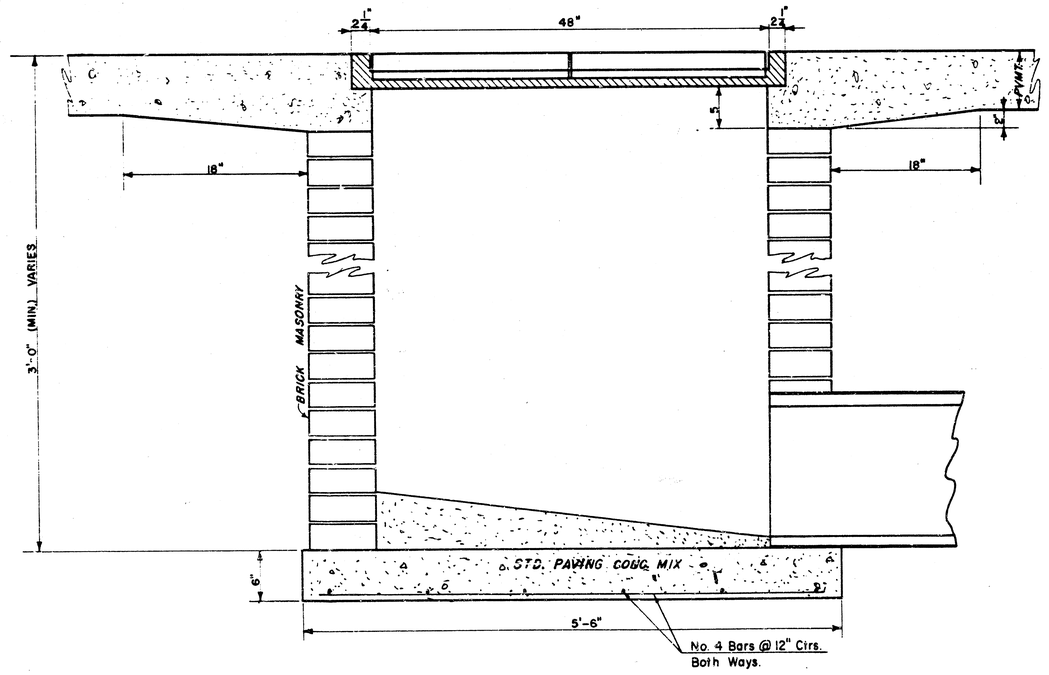

DROP INLET DETAILS

M.E. Lindebak, City Engineer

City of Wichita, Kansas

Project: NORTHROCK BUSINESS PARK Ph2

Project No. 468-76-245-81623-000-000-001

Date: January, 1987

Scale: 1-1/2" = 1'-0"

6/7

FILMED FROM THE BEST AVAILABLE COPY....

FINAL PLAT OF

STONEHEDGE

AN ADDITION TO WICHITA, SEDGWICK COUNTY, KANSAS

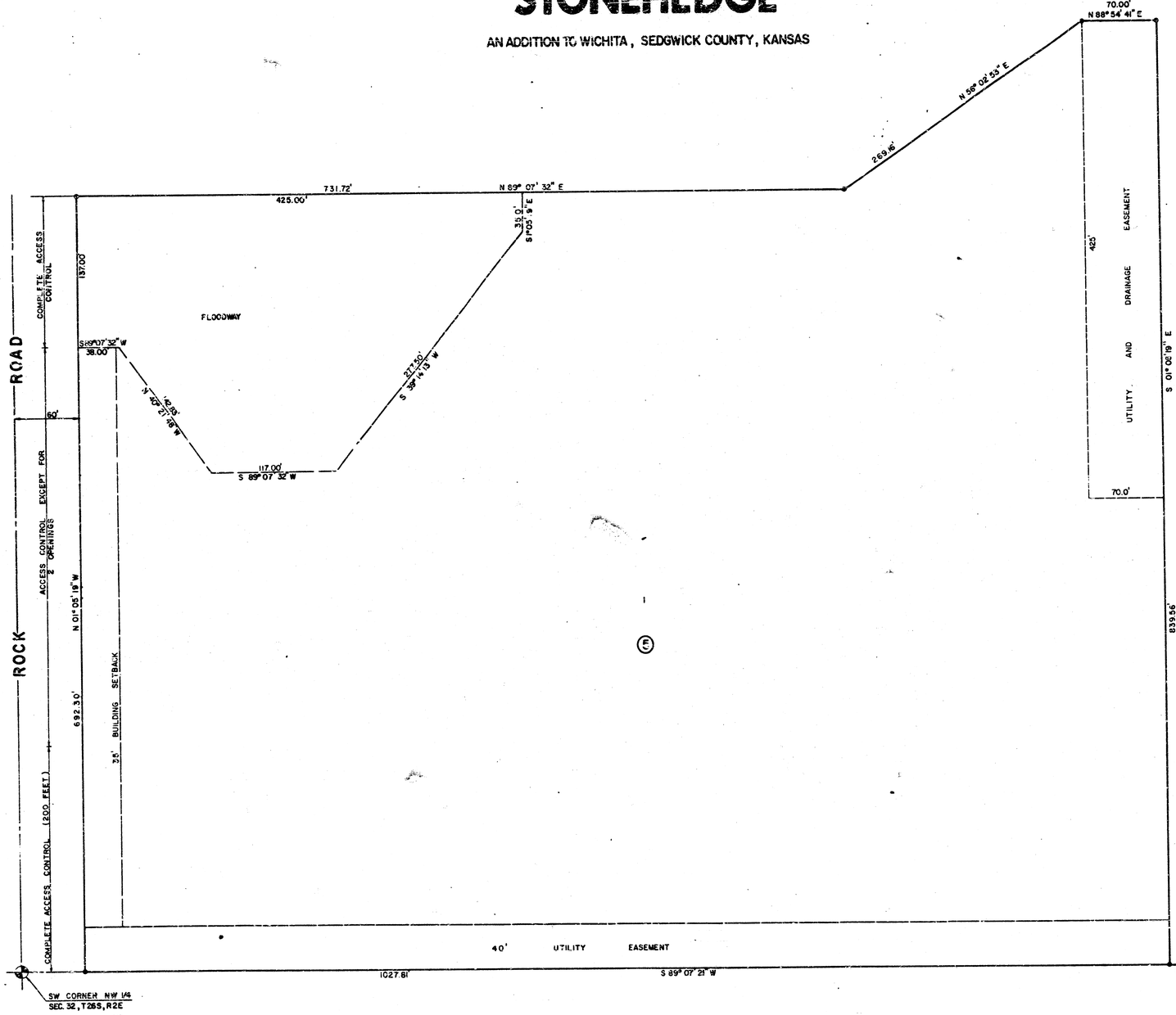

This plat of "Stonehedge" has been submitted to and approved by the Wichita-Sedgwick County Metropolitan Area Planning Commission, Wichita, Kansas.

Dated this 23rd day of OCTOBER, 1980.

Wichita-Sedgwick County Metropolitan Area Planning Commission

_____, Chairman
Michael J. Levina

_____, Secretary
Robert A. Lakin

This plat approved and all dedications shown hereon, if any, accepted by the City Commission of the City of Wichita, Kansas this 2nd day of DEC., 1980.

_____, VICE Mayor
R.C. BROWN

_____, City Clerk
Donald C. Gisick

This plat approved and all dedications shown hereon, if any, accepted by the Board of County Commissioners of Sedgwick County, Kansas this 31 day of December, 1980.

_____, Chairman
Everett Patrick

_____, Commissioner
Tom Scott

_____, Commissioner
Donald E. Gragg

Attest: _____, County Clerk
Dorothy K. White

Entered on Transfer Record this 31 day of December, 1980.

_____, County Clerk
Dorothy K. White

State of Kansas
ss:
County of Sedgwick

This is to certify that this instrument was filed for record in the Register of Deeds Office at 1:45 PM o'clock on the 5TH day of JANUARY, 1981.

#521634

_____, Register of Deeds
Bette F. McCart

_____, Deputy
Pat Kettler

20.00

FILMED FROM THE BEST AVAILABLE COPY