SHEET NO.	TOTAL SHEETS
1	9

CITY OF WICHITA, KANSAS
MICHAEL E. LINDEBAK, P.E., CITY ENGINEER

STORM WATER SEWER NO. 378

IN

BARRINGTON CORNER

CITY OF WICHITA PROJECT NO. 468-76-245-81911-000-000-001
INDEX NO. 750679

INDEX OF SHEETS

1. TITLE SHEET
2. PLAT
3.-5. PLAN AND PROFILE – LINE NO. 1
5. PLAN AND PROFILE – LINE NO. 2
6. TYPE 22 CURB INLET
7. SPECIAL R.C. HEADWALL AND R.C. MANHOLE DETAILS
8. MISCELLANEOUS DETAILS
9. MANHOLE FRAME AND COVER DETAILS

PROJECT SURVEY CONTROL

DATUM BENCH MARK: RAILROAD SPIKE IN SOUTHWEST FACE POWER POLE AT NORTHEAST CORNER 21ST STREET NORTH/RIDGE ROAD. ELEV.=143.38 CITY DATUM

BENCH MARK: CHISELED "□" ON EAST HEADWALL STORM DRAIN INLET IN SOUTH DITCH 21ST STREET NORTH 600' WEST OF RIDGE ROAD. ELEV.=141.83 CITY DATUM

BENCH MARK: RAILROAD SPIKE IN NORTH FACE POWER POLE 410' SOUTH AND 40' WEST OF THE INTERSECTION OF THE CENTERLINES OF 21ST STREET NORTH AND RIDGE ROAD. ELEV.=144.90 CITY DATUM

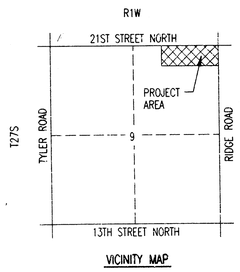

VICINITY MAP

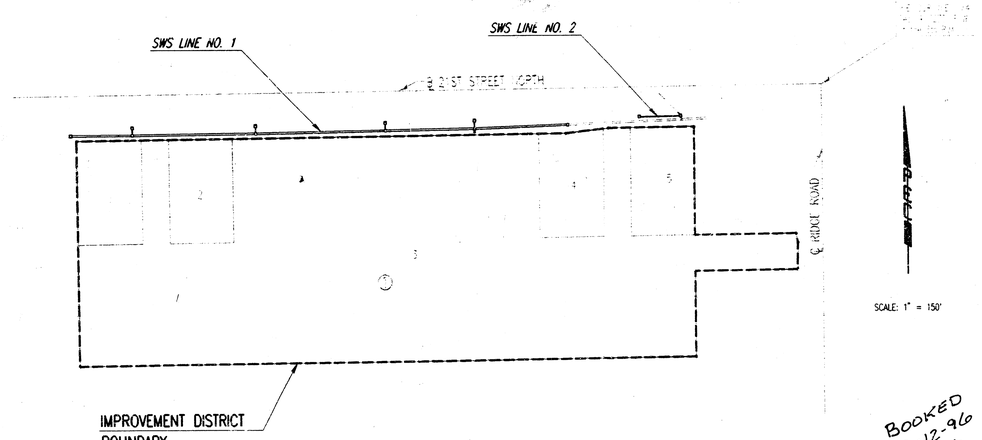

SCALE: 1" = 150'

BOOKED 3-12-96 MCG D-281

BRENT E. REINBERG LICENSED LAND SURVEYOR 8198 KANSAS ENVIRONMENTAL ENGINEER

GENERAL NOTES

UNDERGROUND UTILITY SERVICE LINES AND OVERHEAD UTILITY POLE LINES ARE TO BE ADJUSTED AS NECESSARY BY OTHERS PRIOR TO CONSTRUCTION UNLESS THE PLANS SPECIFICALLY CALL FOR THEIR ADJUSTMENT BY THE CONTRACTOR. EXISTING UTILITIES AND THEIR LOCATION, AS SHOWN ON THE PLANS, REPRESENT THE BEST INFORMATION OBTAINABLE FOR DESIGN. LOCATION INFORMATION HAS BEEN OBTAINED FROM THE VARIOUS UTILITY COMPANIES AND IS EITHER FROM COMPANY RECORD DRAWINGS OR COMPANY PROVIDED FIELD LOCATIONS. THE CONTRACTOR WILL BE REQUIRED TO WORK AROUND EXISTING UTILITIES WITHIN THE RIGHT-OF-WAY WHICH DO NOT CONFLICT WITH PROPOSED CONSTRUCTION. CONTRACTOR SHALL SATISFY HIMSELF OF SUBSURFACE CONDITIONS PRIOR TO BIDDING.

TREES AND SHRUBS IN PUBLIC RIGHT-OF-WAY WHICH ARE IN DIRECT CONFLICT WITH PROPOSED NEW CONSTRUCTION SHALL BE REMOVED BY THE CONTRACTOR WITH THE ENGINEER'S APPROVAL. TREES AND SHRUBS WHICH ARE NOT IN DIRECT CONFLICT WITH PROPOSED NEW CONSTRUCTION SHALL BE SAVED AND PROTECTED FROM DAMAGE.

RUBBLE FROM THE REMOVAL OF MISCELLANEOUS STRUCTURES SHALL BE DISPOSED OF ON SITES TO BE PROVIDED BY THE CONTRACTOR AND APPROVED AS NOTED.

ALL DISPOSAL SITES MUST BE APPROVED BY THE KANSAS DEPARTMENT OF HEALTH AND ENVIRONMENT. MATERIAL EITHER STOCKPILED OR DISPOSED OF IN A FLOOD PLAIN WOULD REQUIRE A KANSAS STATE BOARD OF AGRICULTURE PERMIT. ANY MATERIAL DUMPED IN WATERS OF THE UNITED STATES OR WETLANDS IS SUBJECT TO U.S. CORPS OF ENGINEERS PERMITTING REGULATIONS. ANY MATERIAL BURIED OR STOCKPILED BEYOND APPROVED CONSTRUCTION LIMITS WOULD REQUIRE ADDITIONAL ARCHOLOGICAL INVESTIGATIONS UNLESS BURIED IN A PREVIOUSLY APPROVED BORROW LOCATION.

EXCESS EXCAVATED MATERIAL AND EXCESS TOPSOIL SHALL BE STOCKPILED OR WASTED WITHIN THE PLAT LIMITS. THE CONTRACTOR SHALL CONTACT THE OWNER'S ENGINEER AT 262-2691 FOR INFORMATION PERTAINING TO THE ACCEPTABLE LOCATIONS FOR THE DISPOSITION OF EXCESS MATERIAL. WASTE MATERIAL SHALL BE GRADED SMOOTH AND SLOPED TO DRAIN. THIS WORK SHALL BE CONSIDERED SUBSIDIARY TO OTHER BID ITEMS.

CONTRACTOR SHALL PROVIDE A MINIMUM FORTY-EIGHT (48) HOUR ADVANCE NOTICE (EXCLUDING WEEKENDS AND HOLIDAYS) PRIOR TO BEGINNING ANY EXCAVATION, TO KANSAS ONE-CALL SYSTEM, A UTILITY LOCATION SERVICE, AT (316) 687-2470 TO REQUEST THE FOLLOWING UTILITY COMPANIES TO LOCATE ALL EXISTING LINES WITHIN THE PROJECT AREA: K.G.&E. GAS, K.G.&E. ELECTRIC, SOUTHWESTERN BELL TELEPHONE, MULTIMEDIA CABLEVISION, CITY OF WICHITA SEWER MAINTENANCE AND CITY OF WICHITA WATER DEPARTMENT. ALSO MR. MARK BORST, P.E. AT SEDGWICK COUNTY BUREAU OF PUBLIC SERVICES (383-7901) FOR TRAFFIC SIGNAL.

THE CONTRACTOR SHALL BE RESPONSIBLE FOR PRESERVING PROPERTY IRONS. THE CONTRACTOR WILL BE REQUIRED TO RE-ESTABLISH ANY PROPERTY IRONS WHICH ARE DAMAGED OR DESTROYED BY HIS CONSTRUCTION OPERATIONS. SUCH IRONS SHALL BE RE-ESTABLISHED BY A LICENSED LAND SURVEYOR IN ACCORDANCE WITH STATE LAWS.

THE WATER DEPARTMENT SHALL FIELD LOCATE WATER VALVES ONE TIME DURING CONSTRUCTION WHEN REQUESTED BY THE CONTRACTOR. IT SHALL BE THE CONTRACTOR'S RESPONSIBILITY TO PRESERVE SUCH FIELD LOCATIONS DURING THE CONSTRUCTION PROCESS. WATER VALVES, WATER VALVE BOXES OR FIRE HYDRANTS DAMAGED DURING CONSTRUCTION SHALL BE REPAIRED BY THE CONTRACTOR AT HIS OWN EXPENSE.

THE CONTRACTOR SHALL ADJUST WATER VALVE BOXES AS DIRECTED BY THE ENGINEER. THIS WORK TO BE SUBSIDIARY TO OTHER BID ITEMS.

THE CONTRACTOR SHALL GIVE ALL PROPERTY OWNERS AND/OR TENANTS OF DEVELOPED PROPERTY ABUTTING THE PROJECT LIMITS A MINIMUM OF TEN (10) DAYS ADVANCE NOTICE PRIOR TO START OF CONSTRUCTION.

PROPERTIES WITHIN THE PROJECT LIMITS MAY HAVE UNDERGROUND SPRINKLER SYSTEMS IN PUBLIC RIGHTS-OF-WAY WHICH CONFLICT WITH NEW CONSTRUCTION. CONTRACTOR WILL BE REQUIRED TO REMOVE SUCH IMPROVEMENTS SHOULD THEY NOT BE REMOVED BY THEIR OWNER AT THE TIME OF CONSTRUCTION OF THE PROJECT. THE CONTRACTOR WILL BE REQUIRED TO SALVAGE ALL SPRINKLER HEADS AND/OR VALVES AND GIVE SUCH MATERIAL TO THEIR OWNER. PORTIONS OF UNDERGROUND SPRINKLER SYSTEMS NOT IN CONFLICT WITH NEW CONSTRUCTION SHALL BE PROTECTED FROM DAMAGE AND SHALL REMAIN IN PLACE. ALL WORK IN CONNECTION WITH UNDERGROUND SPRINKLER SYSTEMS SHALL BE CONSIDERED AS SUBSIDIARY TO THE CONTRACT PAY ITEMS OF WORK.

CONTRACTOR SHALL MAINTAIN 2-LANE EAST BOUND TRAFFIC AT ALL TIMES. CONTRACTOR SHALL PROVIDE, ERECT AND MAINTAIN TRAFFIC CONTROL AND ADVANCE WARNING DEVICES AS REQUIRED BY THE MANUAL ON UNIFORM TRAFFIC CONTROL DEVICES (MUTCD).

AUGUST, 1995

PLANS PREPARED BY
PROFESSIONAL ENGINEERING CONSULTANTS, P.A.
ENGINEERS
WICHITA, KANSAS

usr/cstly/dgn: 1995/90325/378title.dgn
date plotted: 8/8/95
deliver to: dwayne dimm

PROJECT NO.	SHEET NO.	TOTAL SHEETS
468-76-245-81911-000-000-001	2	9

BARRINGTON CORNER

AN ADDITION TO WICHITA, SEDGWICK COUNTY, KANSAS

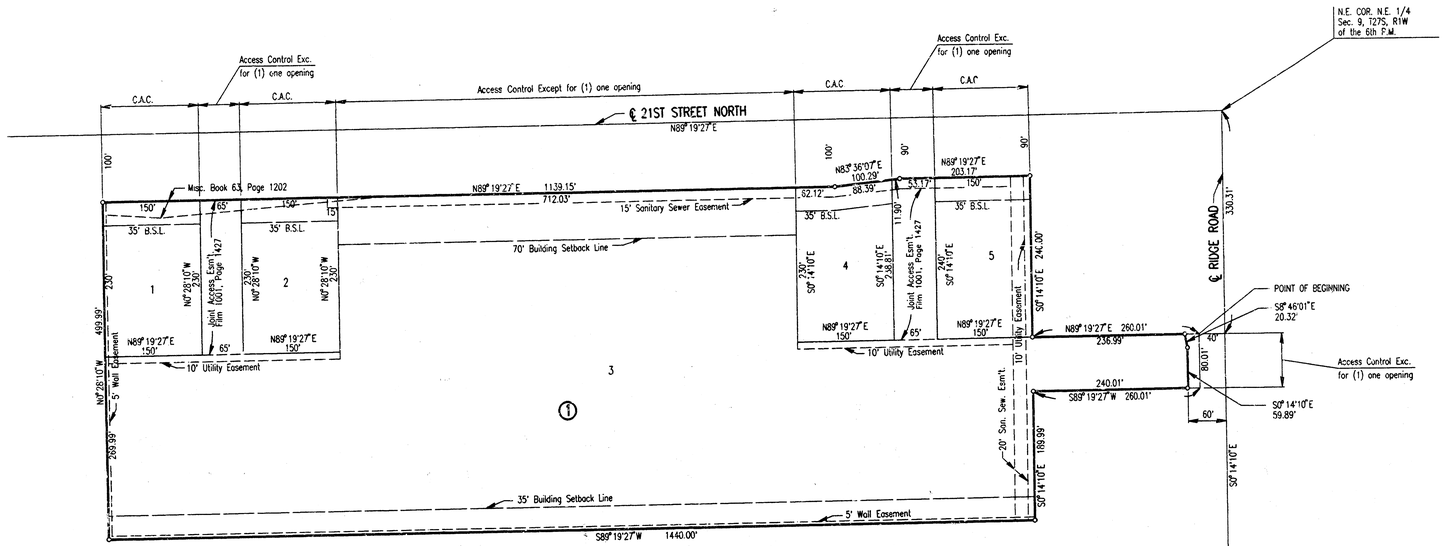

SCALE: 1" = 100'

o = IRON SET

B.S.L.=BUILDING SETBACK LINE
C.A.C.=COMPLETE ACCESS CONTROL

STORM WATER SEWER NO. 378

PLAT

PROFESSIONAL ENGINEERING CONSULTANTS, P.A.
ENGINEERS
WICHITA, KANSAS

Designed by	BER, GDD	Checked by	
Drawn by	DEP	Date AUG., 1995	Job No. 95325

usr/ustn/dgn/1995/95325/378plat.dgn
date plotted: 8/8/95
deliver to: dwaine dunn

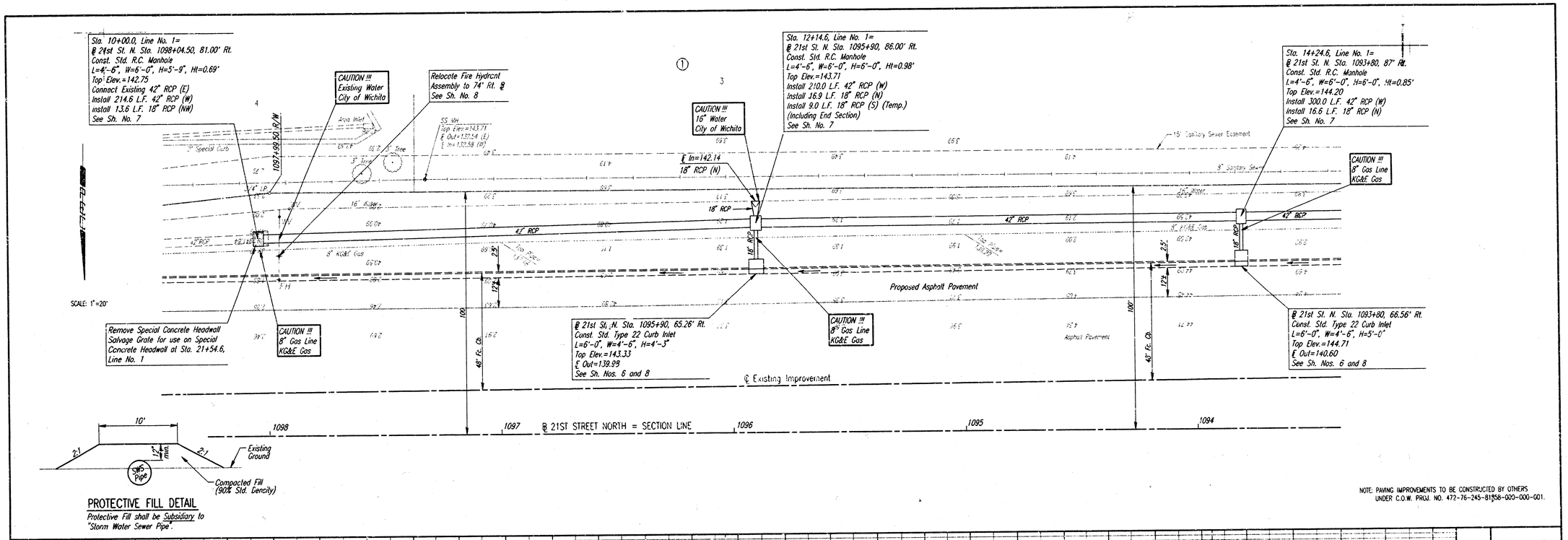

PROTECTIVE FILL DETAIL

Protective Fill shall be Subsidiary to "Storm Water Sewer Pipe".

NOTE: PAVING IMPROVEMENTS TO BE CONSTRUCTED BY OTHERS UNDER C.O.W. PROJ. NO. 472-76-245-81958-000-000-001.

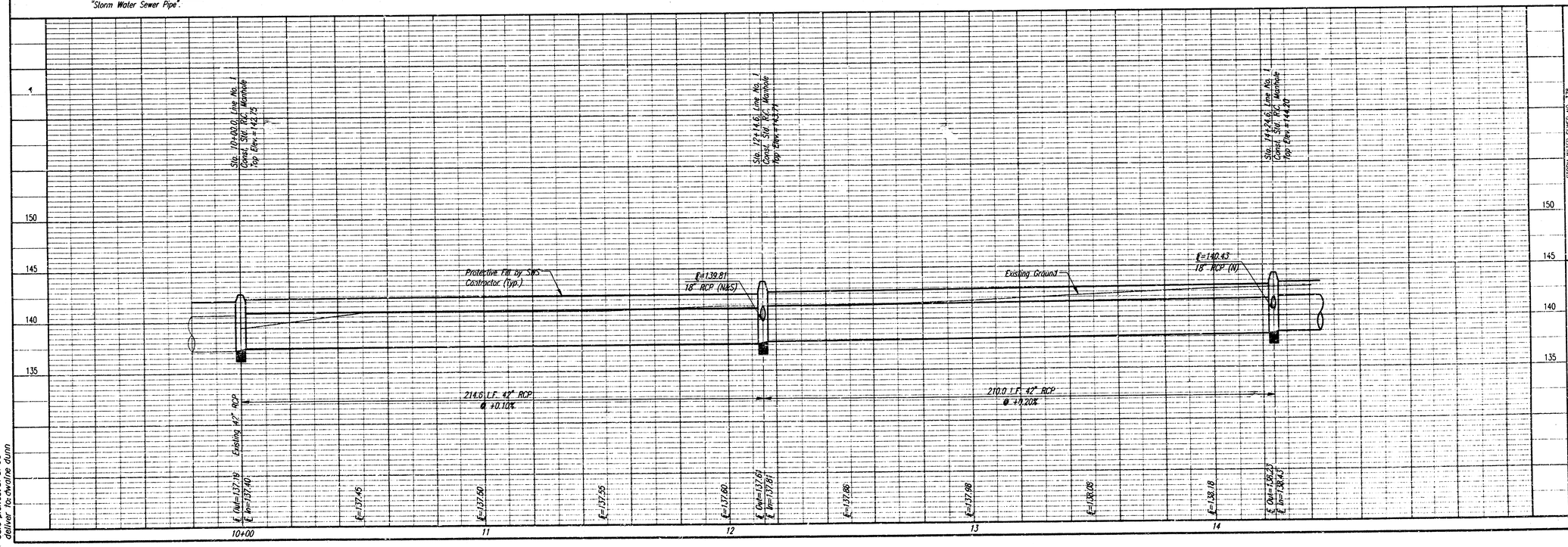

STORM WATER SEWER NO. 378

LINE NO. 1

STA. 10+00.0 TO STA. 14+24.6

C.O.W. PROJ. NO. 468-76-245-81911-000-000-001

PROFESSIONAL ENGINEERING CONSULTANTS, P.A.
ENGINEERS
WICHITA, KANSAS

Designed by BER, GDD
Drawn by DEP
Job No. 95325
Date AUG., 1995

Sheet 3 of 9

usr/ustn/dgn: 1995/95325/swspln1.dgn
date plotted: 8/8/95
deliver to: dwaine dunn

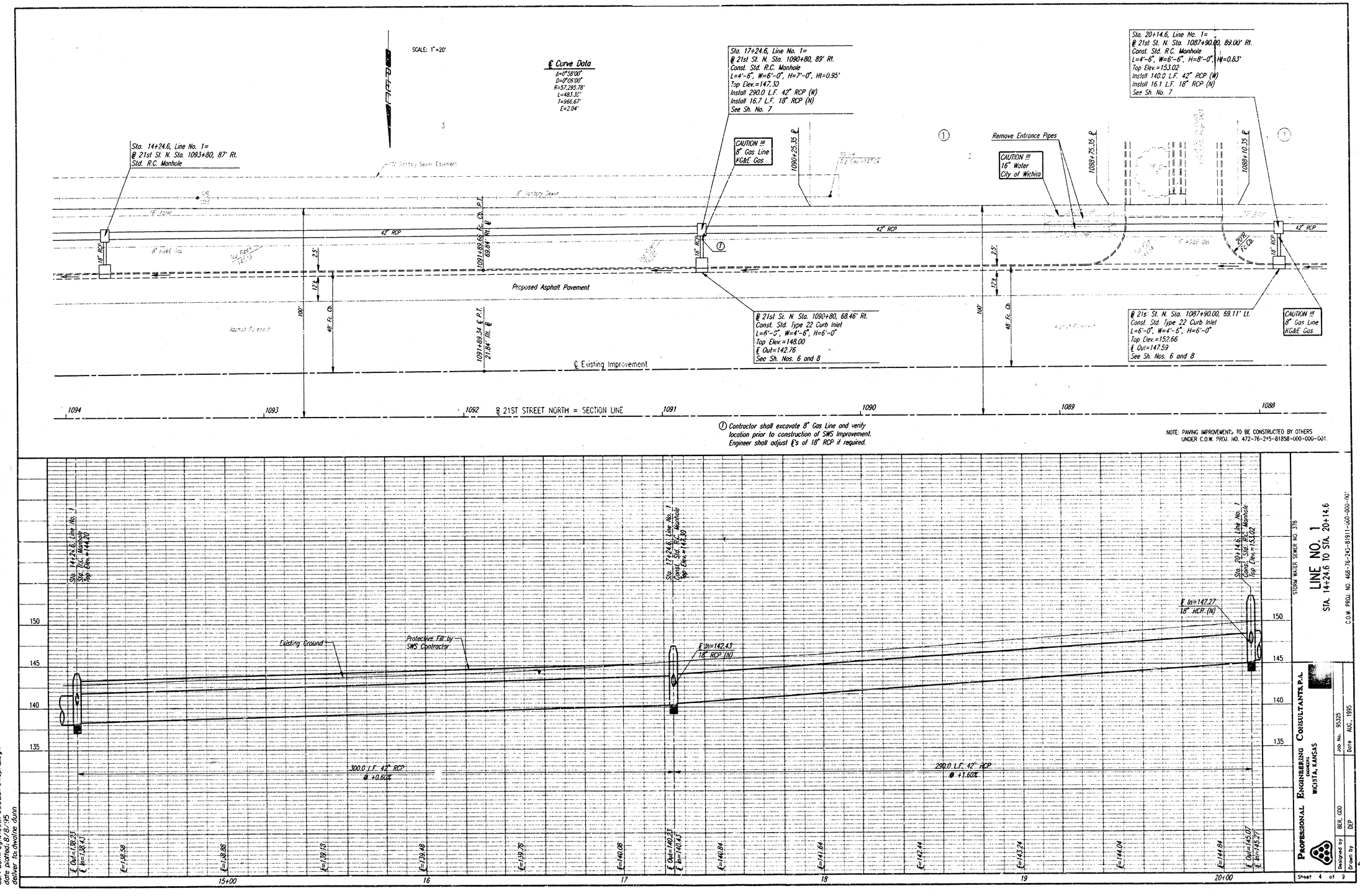

usr/ustn/dgn:1995/95325/swspn2.dgn
date plotted:8/8/95
deliver to:dwaine dunn

STORM WATER SEWER NO. 378

LINE NO. 1
STA. 14+24.6 TO STA. 20+14.6

C.O.W. PROJ. NO. 468-76-245-81911-000-000-001

PROFESSIONAL ENGINEERING CONSULTANTS, P.A.
ENGINEERS
WICHITA, KANSAS

Designed by	BER, GDD
Drawn by	DEP
Job No.	95325
Date	AUG., 1995

Sheet 4 of 9

4

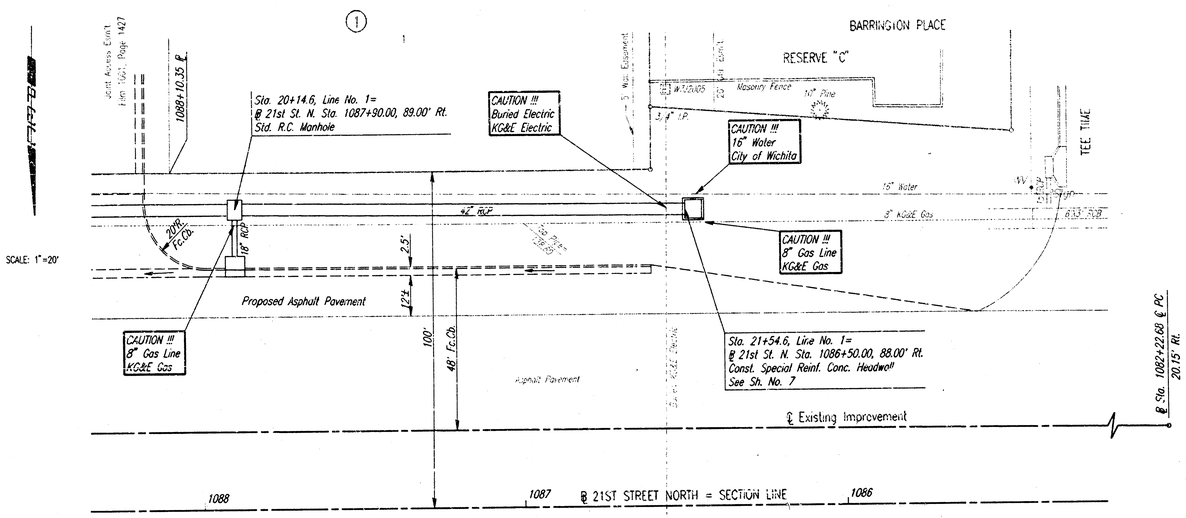

NOTE: PAVING IMPROVEMENTS TO BE CONSTRUCTED BY OTHERS UNDER C.O.W. PROJ. NO. 472-76-245-81858-000-000-001.

LINE NO. 1

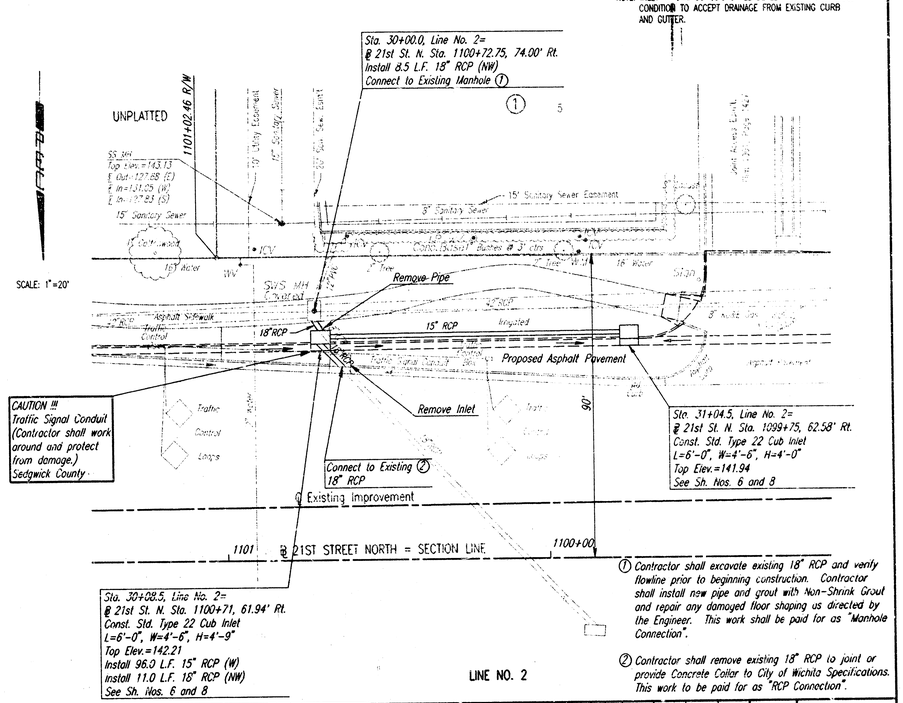

LINE NO. 2

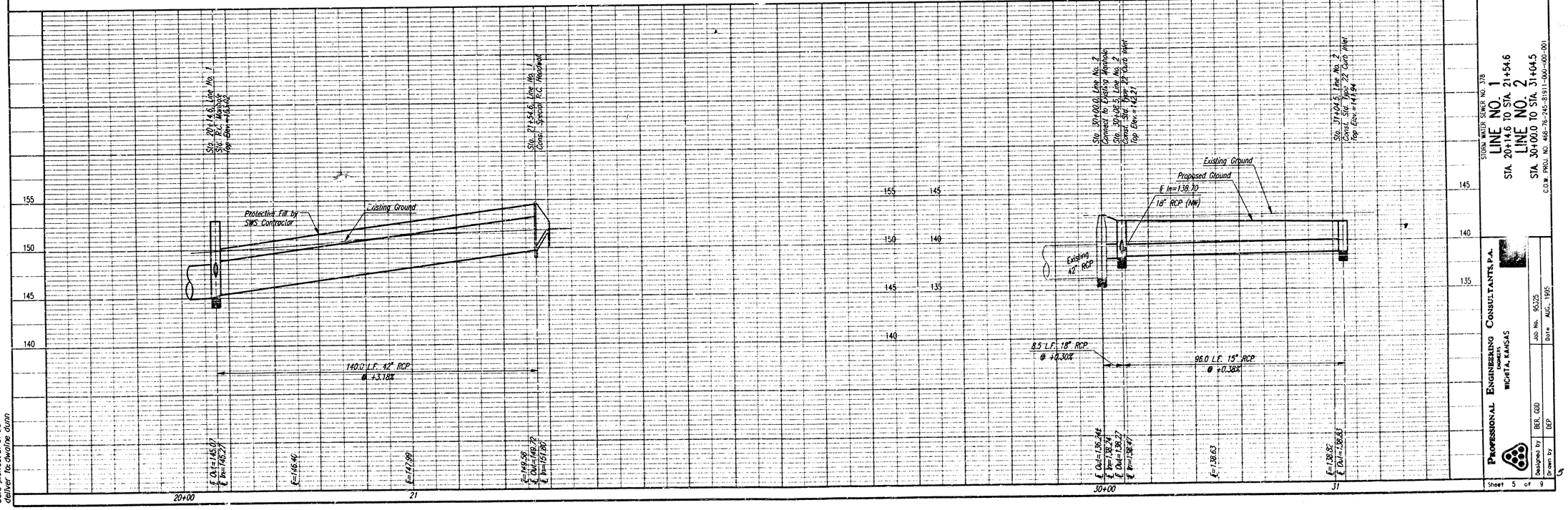

STORM WATER SEWER NO. 378

LINE NO. 1
STA. 20+14.6 TO STA. 21+54.6

LINE NO. 2
STA. 30+00.0 TO STA. 31+04.5

C.O.W. PROJ. NO. 468-76-245-81911-000-001

PROFESSIONAL ENGINEERING CONSULTANTS, P.A.
NORTH TOPEKA
WICHITA, KANSAS

Designed by	BER, GBD
Drawn by	DEP
Job No.	95325
Date	AUG., 1995

Sheet 5 of 9

usr/usin/dgn:1995/95325/swsoln3.dgn
date plotted: 8/8/95
deliver to: dwaine dunn

FHWA REGION NO.	STATE	PROJECT NO.	YEAR	SHEET NO.	TOTAL SHEETS
7	KANSAS	468 76 245 81911 0000000	19	6	9

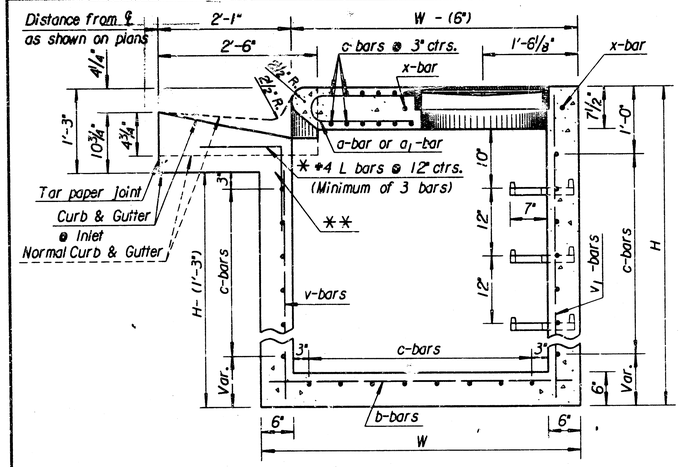

SECTION A-A

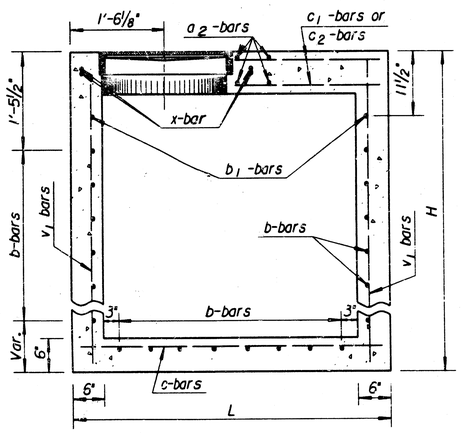

SECTION B-B

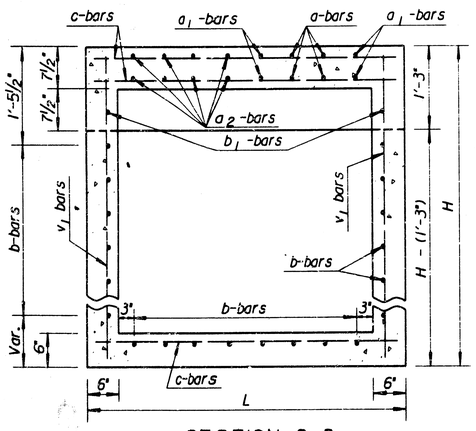

SECTION C-C

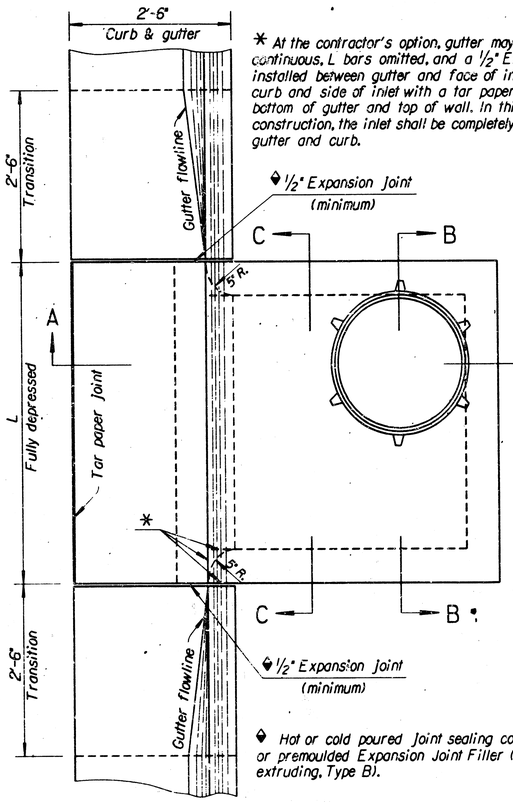

PLAN

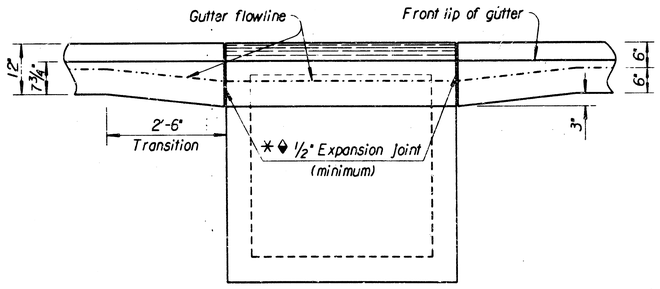

ELEVATION

Note: Transition gutter from normal depth of 6" to 9" at inlet in 2'-6". Curb and Gutter sections shall be shaped as shown where required by the installation of curb inlets. This work will be subsidiary to other bid items.

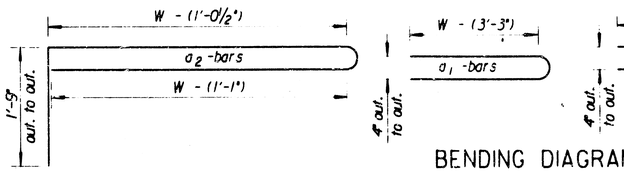

BENDING DIAGRAMS

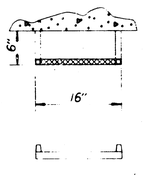

STEP DETAILS

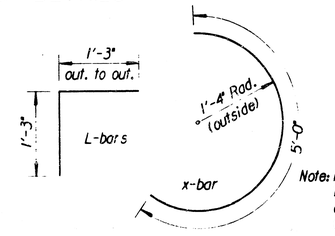

Note: Reinforcing steel for L bars is not included in the steel quantity and is subsidiary to the other inlet items.

Note: Use Class A Concrete throughout. All exposed edges shall be finished with an edging tool.
At the contractors option Class A Concrete (AE) or mix used in concrete pavement may be used throughout.
In general, pipes will enter and leave manhole at various positions. Where possible bend bars around pipes.
Floor of manhole to be shaped ~~as shown in various "EXAMPLES"~~ with unreinforced Class "A" Concrete.
Manhole opening and steps, where used, shall be placed to afford easy access to top of shaped invert. Top reinforcing bars to be adjusted accordingly.
All castings shall be gray iron and shall comply with the KDOT Standard Specifications.
No deductions in concrete quantities shall be made for pipe openings or additions to concrete quantities shall be made for shaping floor of manholes.
~~When so ordered by the Engineer, the top of the manhole shall be sloped slightly to approximately fit the ground line or other conditions.~~
Dimensions and weights of cast iron as shown on this sheet are minimum. Larger dimensions and/or heavier weights of cast iron may be used.
Steps shall be installed in all storm sewer inlets when specified in the plans or when "H" is equal to or greater than six feet. Steps shall comply with the KDOT Standard Specification.
All inlets shall have tops permanently set and sloped 1/4"/ft. towards street.
Inlets shall be bid as a Lump Sum per each. Any Quantities are for Information only.

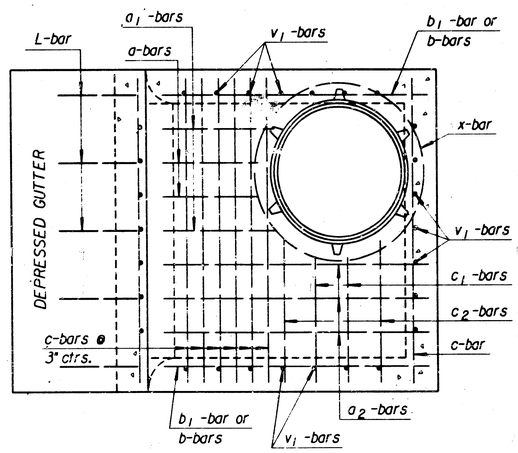

Reinforcing Steel Top View

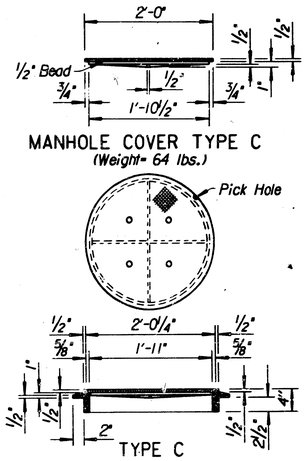

NOTE: All manhole castings are cast iron. Weight of castings includes no allowance for fillets and overruns.

*LIGHT TYPE
MANHOLE COVER & RING

*Rings with four equally spaced lugs will be permitted.

NO.	DATE	REVISIONS	BY	APP'D
2	12-27-93	Delete point note	R.J.S.	J.O.B.
1	1-30-92	Rev. point&step notes, ent. on CADD	R.J.S.	J.O.B.

KANSAS DEPARTMENT OF TRANSPORTATION

TYPE 22
CURB INLET

~~STD. NO. 646~~

FHWA APPROVAL	2-15-94	APP'D James O. Brewer	
DESIGNED	DETAILED	QUANTITIES	TRACED Squeaky
DESIGN CK.	DETAIL CK.	QUAN.CK.	TRACE CK. Spiff

6

Source File :
Drawn By : road
DGN File : /usr2/road/std6460.dgn
Plotted : 18-FEB-1994 11:24 View=

PROJECT NO.	SHEET NO.	TOTAL SHEETS
468-76-245-81911-000-000-001	7	9

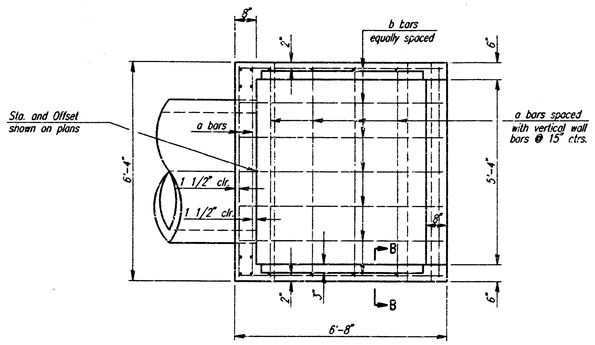

PLAN

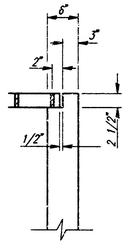

SECTION B-B

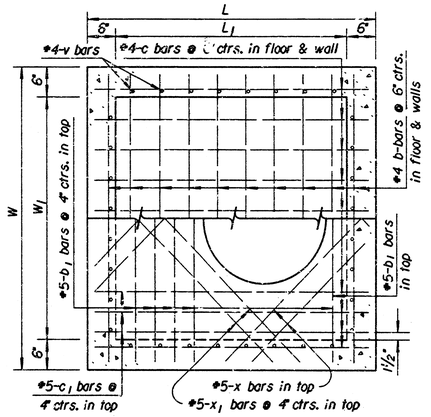

PLAN
(Showing top & floor reinf.)

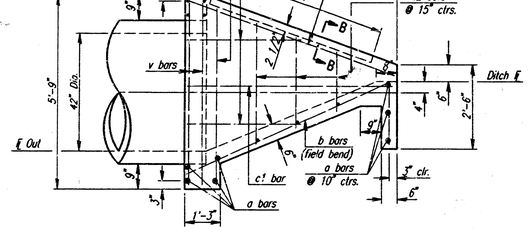

ELEVATION

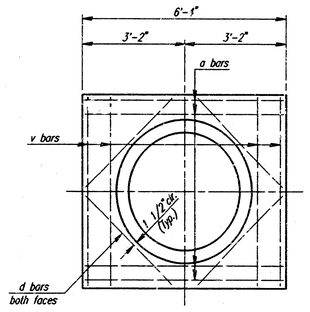

SECTION THRU HEADWALL

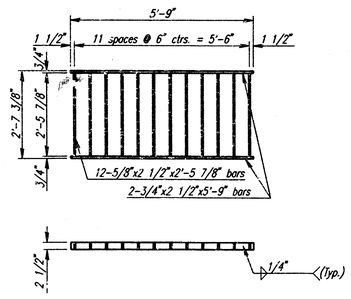

STRUCTURAL STEEL GRATE
Wt. 232 Lbs. Ea. 2 Req'd. Ea. Headwall

BAR LIST DIAMETER = 42"								
BAR	a	b	c	c1	d	v	v1	v2
NUMBER	14	7	4	4	8	8	2	6
SIZE	#4	#4	#4	#4	#4	#4	#4	#4
LENGTH	6'-1"	8'-5"	3'-6"	6'-5"	3'-10"	5'-6"	5'-2"	*

SUMMARY OF QUANTITIES	
DIAMETER	42"
CONCRETE	2.52 Cu. Yds.
REINFORCING STEEL	190 lbs.
STRUCTURAL STEEL ≠	464 lbs.

≠ Contractor shall salvage Structural Steel Grate from Existing Special R.C. Headwall to be removed at Sta. 10+00.0, Line No. 1 for reuse on Special R.C. Headwall at Sta. 20+54.6, Line No. 1.

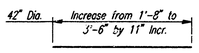

* v2 bar (cut 2 each length)

SPECIAL R.C. HEADWALL

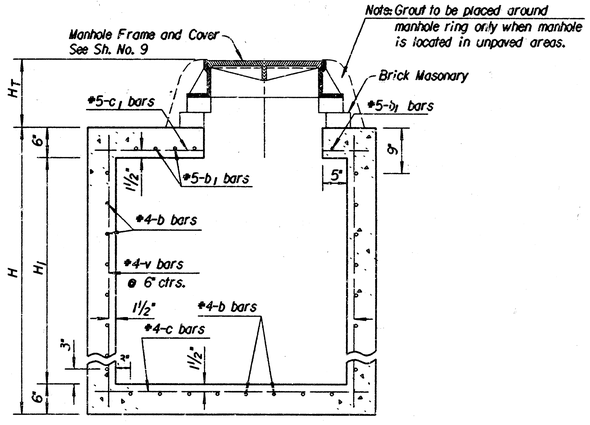

SECTION
(Exclusive of floor shaping)

R.C. MANHOLE

GENERAL NOTES

Concrete: Bevel all exposed edges with a 1/4" triangular molding or finish with an approved edging tool. Concrete shall be as per City of Wichita Standard Specifications for concrete paving mix except that it shall have a minimum 28 day compressive strength of 4,000 p.s.i. All pipes shall be flush cut prior to being cast into the headwall or manhole.

Reinforcing Steel: All dimensions relative to reinforcing steel are to centerline of bar unless otherwise noted. All reinforcing steel shall conform to A.S.T.M. designation A615 Grade 60 and shall be epoxy coated. All clearances shall be 2" unless otherwise noted.

Payment: A deduction in concrete quantities has been made for the pipe opening. The "Reinforced Concrete Manhole" and "Special Reinforced Concrete Headwall" shall be paid for at the unit price bid per each in place including concrete, reinforcing steel, excavation and all other miscellaneous materials, labor, tools, equipment, and incidentals necessary to complete the work. Quantities shown are for information only.

STORM WATER SEWER NO. 378

SPECIAL R.C. HEADWALL AND R.C. MANHOLE DETAILS

PROFESSIONAL ENGINEERING CONSULTANTS, P.A.
ENGINEERS
WICHITA, KANSAS

Designed by	BER, GDD	Checked by		
Drawn by	DEP	Date AUG., 1995	Job No. 95325	7

usr/ustn/dgn:1995/95325/specheadwl.dgn
date plotted: 8/8/95
deliver to: dwayne dunn

PROJECT NO.	SHEET NO.	TOTAL SHEETS
468-76-245-81911-000-000-001	8	9

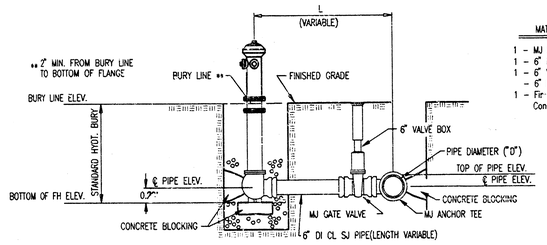

MATERIALS

1 – MJ Anchor Tee ("D"x 6")
1 – 6" MJ Gate Valve
1 – 6" Valve Box
– 6" DI CL SJ Pipe (length as needed)
1 – Fir- Hydrant
Concrete Blocking (As needed)

FIRE HYDRANT ASSEMBLY

GENERAL NOTES

1. ALL ELEVATIONS SHOWN ARE CITY OF WICHITA DATUM. (U.S.G.S. – 1187.4 = CITY DATUM)
2. CONTRACTOR WILL BE REQUIRED TO PROVIDE A MINIMUM ADVANCE NOTICE OF FORTY-EIGHT (48) HOURS TO UTILITY COMPANIES PRIOR TO STARTING ANY EXCAVATION AS FOLLOWS:

KANSAS ONE-CALL	687-2470

THE CONTRACTOR MUST NOTIFY THE FOLLOWING IN CASE OF AN EMERGENCY:

CABLEVISION	262-4270 OR 263-2061
KG&E-GAS	263-7511
KG&E-ELECTRIC	264-1141
PEOPLES NATURAL GAS	942-8350 OR 263-8161
SOUTHWESTERN BELL TELEPHONE CO.	1-571-2611
CITY OF WICHITA WATER DEPARTMENT	268-4908
CITY OF WICHITA SEWER MAINTENANCE	733-0202

3. ALL WATER MAINS AND APPURTENANCES SHALL BE INSTALLED IN ACCORDANCE WITH CITY OF WICHITA, KANSAS STANDARD SPECIFICATIONS FOR WATER MAIN INSTALLATIONS NO. 14533.
4. CONTRACTOR SHALL EXCAVATE EXISTING GAS LINE AND WATER LINE TO VERIFY LOCATION AND DEPTH PRIOR TO COMMENCING CONSTRUCTION OF FIRE HYDRANT RELOCATION. ANY DEVIATION FROM PLAN REQUIRED SHALL BE APPROVED BY THE ENGINEER.
5. LUMP SUM BID FOR "FIRE HYDRANT RELOCATION" SHALL BE FULL COMPENSATION FOR ALL MATERIALS, TOOLS, LABOR, EQUIPMENT AND INCIDENTALS NECESSARY TO COMPLETE THE WORK. QUANTITIES ARE FOR INFORMATION ONLY.

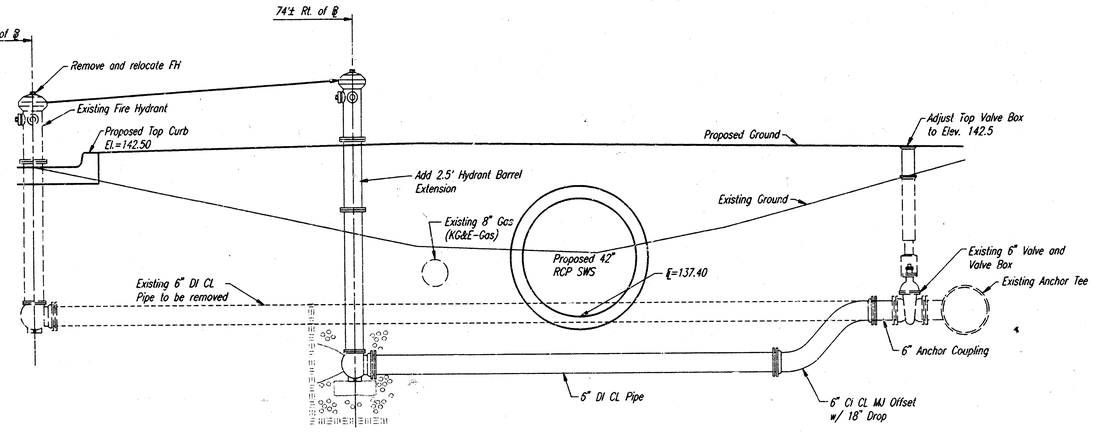

FIRE HYDRANT RELOCATION

@ Sta. 1097+96±, Rt.

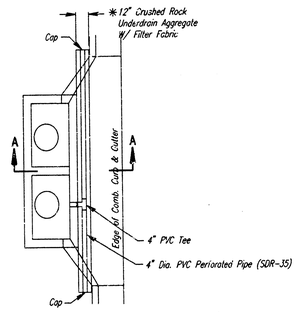

PLAN

* UNDERDRAIN AGGREGATE
PERCENT OF AGGREGATE RETAINED

1"	0
3/4 "	0–10
3/8 "	45–80
#4	90–100
#8	95–100

ROCK QUALITY SHALL CONFORM TO THE REQUIREMENTS SPECIFIED BY THE KDOT 1990 EDITION STANDARD SPECIFICATION SUBSECTION 1102 FOR DURABILITY CLASS Φ.

PAVEMENT UNDERDRAIN LOCATIONS		
STREET	℄ STATION	SIDE
21ST ST. N.	1099+75	RT.

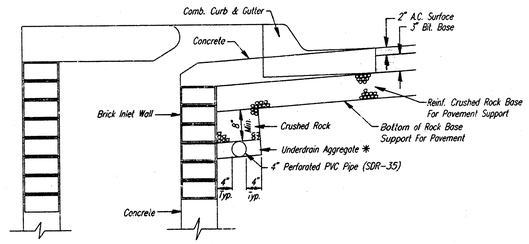

(Min. 16 Perforations Per Lin. Ft. @ 1/4" Dia.)
Perforations To Be on Bottom Half

NOTE: SWS CONTRACTOR SHALL INSTALL SDR 35, 4" DRAIN PIPE STUB ONLY THROUGH WALL OF THIS CURB INLET AND CAP TO ALLOW FUTURE CONNECTION OF TEE AND ADDITIONAL DRAIN PIPE BY OTHERS.

SECTION A–A

PAVEMENT UNDERDRAIN DETAIL

NOTE: PLACE 4" PVC PERFORATED PIPE AT ALL DRAINAGE SUMP LOCATION

COST OF UNDERDRAIN SYSTEM TO BE INCIDENTAL TO TYPE 22 INLET.

INLET TYPE MAY VARY FROM THAT SHOWN.

STORM WATER SEWER NO. 378

MISCELLANEOUS DETAILS

PROFESSIONAL ENGINEERING CONSULTANTS, P.A.
ENGINEERS
WICHITA, KANSAS

Designed by	BER, GDD	Checked by	
Drawn by	DEP	Date AUG., 1995	Job No. 95325

8

usr/astb/dgn: 1995/95325/378misc.dgn
date plotted: 8/8/95
deliver to: dwaine dunn

MANHOLE FRAME AND COVER DETAIL

ADOPTED AS STANDARD DESIGN BY
CITY OF WICHITA, KANSAS

MANHOLE COVER
Weight = 180 Lbs.

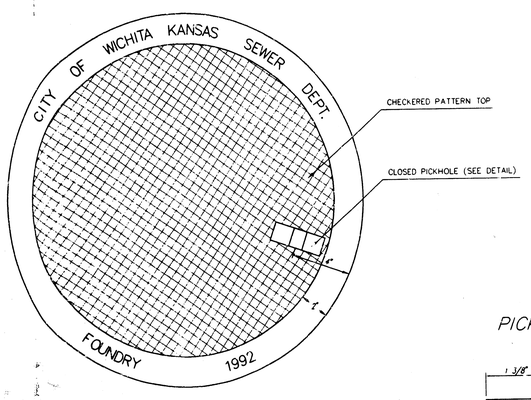

TOP VIEW

PICKHOLE DETA

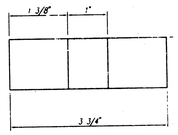

TOP VIEW

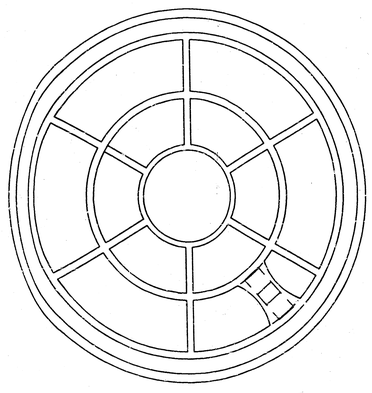

BOTTOM VIEW

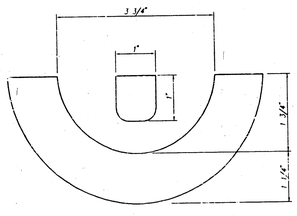

SECTION VIEW

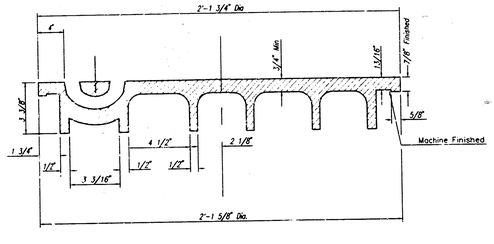

SECTION VIEW

MANHOLE FRAME
Weight = 240 Lbs.

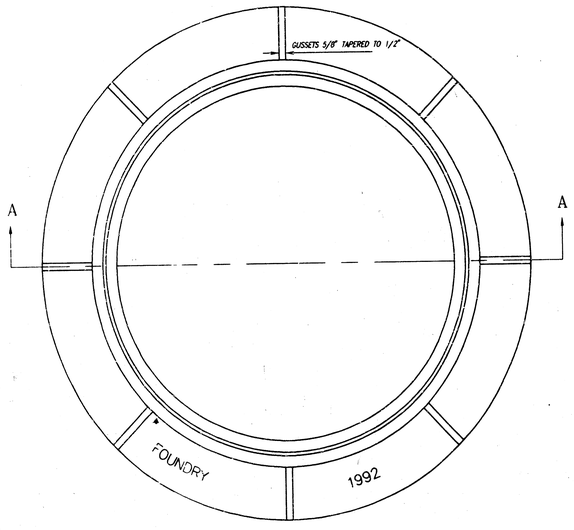

TOP VIEW

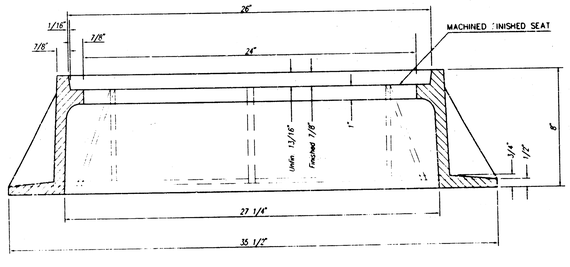

SECTION A-A

GENERAL NOTES

MANHOLE CASTINGS SHALL BE MANUFACTURED USING GOOD QUALITY GRAY IRON CONFORMING TO CLASS 30 OF A.S.T.M. DESIGNATION A-48. DIMENSIONS AND WEIGHTS SHOWN ON THE DETAILED DRAWINGS SHALL BE CONSIDERED AS MINIMUM REQUIREMENTS AND ANY DEVIATIONS FROM THE DIMENSIONS SHOWN MUST BE SPECIFICALLY APPROVED. THE FINISHED CASTINGS SHALL BE OF UNIFORM QUALITY, FREE FROM BLOWHOLES, POROSITY, HARD SPOTS, SHRINKAGE DISTORTIONS OR OTHER DEFECTS.

MANHOLE CASTINGS SHALL BE MANUFACTURED SUCH THAT A COVER MANUFACTURED BY ANY ONE FOUNDARY WILL FIT INTERCHANGEABLY INTO A FRAME MANUFACTURED BY ANOTHER FOUNDRY AND STILL MEET ALLOWABLE CLEARANCES AND NON-ROCKING REQUIREMENTS. THIS WILL REQUIRE MANUFACTURING OF THE MATCHING FACES ON THE COVER AND THE FRAME TO CLOSE TOLERANCES.

THE OUTSIDE CIRCUMFERENCE OF THE VERTICAL FACE OF THE COVER AND THE INSIDE CIRCUMFERENCE OF THE VERTICAL FACE IN THE FRAME RECESS SHALL BE MANUFACTURED TO TOLERANCES SUCH THAT THE CLEARANCE BETWEEN THE COVER AND FRAME WILL NOT EXCEED 1/8" AT ANY POINT ARI JND THE CIRCUMFERENCE OF THE COVER. THE SEATING SURFACES BETWEEN THE COVER AND FRAME SHALL BE MACHINED SUCH AS THESE SURFACES SHALL MAKE FULL CONTACT FOR THEIR FULL CIRCUMFERENCE TO PRECLUDE THE COVER FROM ROCKING IN THE FRAME.

THE MANHOLE FRAME AND COVER SHALL BE MARKED WITH LETTERING INDICATING THE NAME OF THE MANUFACTURER AND THE YEAR WHEN THE COVER OR FRAME WAS C'ST. THE COVER SHALL BE FURTHER IDENTIFIED WITH REGARDS TO OWNERSHIP USING LETTERS A; LEAST 1 INCH IN HEIGHT. THIS IDENTIFICATION SHALL BE "CITY OF WICHITA SEWER DEPARTMENT". THE WORD DEPARTMENT MAY BE ABBREVIATED. THE TEXTURE OF THE TOP SURFACE OF THE COVER SHALL BE MANUFACTURED IN A CHECKERED PATTERN DESIGN AS INDICATED ON THE DRAWINGS. SMOOTH BLOCKOUTS SHALL BE UTILIZED TO HIGHLIGHT THE LETTERING ON THE COVER SURFACE. THE TOTAL AREA OF SMOOTH SURFACE BLOCKOUT SHALL NOT EXCEED THE AREA AS INDICATED ON THE DRAWING. POSITIONING OF SMOOTH BLOCKOUTS AND LETTERING MAY VARY FROM THAT SHOWN ON THE DETAILED DRAWING.

MANHOLE CASTINGS SHALL WEIGH A MINIMUM OF 180 POUNDS ON THE SOLID COVER AND 240 POUNDS ON THE MANHOLE RING. THIS IS A TOTAL OF 420 POUNDS ON A RING AND COVER SET. CASTINGS WEIGHING LESS THAN THE MINIMUM SPECIFICATIONS WILL NOT BE ACCEPTED.

TO INSURE CONFORMANCE TO TENSILE STRENGTH REQUIREMENTS ALL CASTINGS SHALL BE JULIAN HEAT DATED WITH THE FOLLOWING REQUIREMENTS:

TWO TEST BAR SPECIMENS MUST BE POURED WHEN PRODUCING CITY OF WICHITA CASTINGS. ONE OF THE TEST BAR SPECIMENS SHALL BE SENT TO AN INDEPENDENT LABORATORY FOR TENSILE STRENGTH VERIFICATION TESTING. A TEST REPORT SHALL ACCOMPANY EACH SHIPMENT OF CASTINGS. THE HEAT DATE(S) ON THE CASTINGS SHALL RESPOND TO THE TENSILE STRENGTH REPORT(S). THE TEST REPORT WILL BE PAID FOR BY THE SUPPLIER. THE REMAINING TEST BAR SPECIMEN WILL BE SHIPPED TO SEWER MAINTENANCE AT 715 W. HARRY, WICHITA, KANSAS 67213.

MANHOLE FRAME AND COVER DETAIL
ADOPTED AS STANDARD DESIGN BY
CITY OF WICHITA, KANSAS

CITY OF WICHITA, KANSAS
M. E. LINDEBAK - CITY ENGINEER

REVISED 6/27/95

PROJ. NO. 468-76-245-81911-000-000-001

SHEET 9 OF 9

18-10-5-1