SHEET NO.	TOTAL SHEETS
1	11

CITY OF WICHITA, KANSAS
MICHAEL E. LINDEBAK, P.E., CITY ENGINEER

STORM WATER SEWER NO. 431

FOR

OXFORD ADDITION

CITY OF WICHITA PROJECT NO. 468-76-245-82202-000-000-001
INDEX CODE NO. 750349

INDEX OF SHEETS

1. TITLE SHEET
2. PLAT
3. PLAN AND PROFILE - LINE NO. 1
4. PLAN AND PROFILE - LINE NO. 2
5. PLAN AND PROFILE - LINE NO. 3
6. POND AND SWALE PLAN
7. STD. R.C. MANHOLE
8. DROP INLET DETAILS
9. 30" & 54" R.C. HEADWALL DETAILS
10. STD. TYPE 1A CURB INLET DETAILS
11. MANHOLE FRAME AND COVER DETAILS

PROJECT SURVEY CONTROL

DATUM BENCH MARK: CHIS. "O" ON WEST SIDE CONC. BASE OF "Y" SHAPED HIGH VOLTAGE ELEC. POLE, 0.5' BELOW GROUND SURFACE, 30'± NORTH AND 75'± EAST OF W. 1/4 COR. SEC. 5, T27S, R2E. ELEV.=218.63

BENCH MARK : CHIS. "O" NORTH BACK OF CURB OXFORD CIRCLE AT OXFORD COURT NEAR S.E. CORNER INLET, 110' EAST AND 27' NORTH OF "Y" SHAPED HIGH VOLTAGE ELEC. POLE. ELEV.=205.56

BENCH MARK : CHIS. "O" ON WEST SIDE CONC. BASE "Y" SHAPED HIGH VOLTAGE ELEC. POLE NORTH OF OXFORD CIRCLE CUL-DE-SAC. ELEV.=208.95

BENCH MARK : T-POST AT GROUND LEVEL 16'± EAST OF P.C. ON WEST SIDE LOT 6, BLOCK 1. ELEV.=205.20

BENCH MARK : T-POST AT GROUND LEVEL 16'± EAST OF P.C. ON WEST SIDE LOT 14, BLOCK 2. ELEV.=205.76

BENCH MARK : T-POST AT GROUND LEVEL 16'± SOUTH OF P.C. ON N.E. SIDE LOT 17, BLOCK 1. ELEV.=205.41

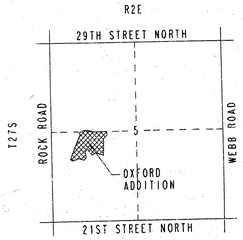

VICINITY MAP

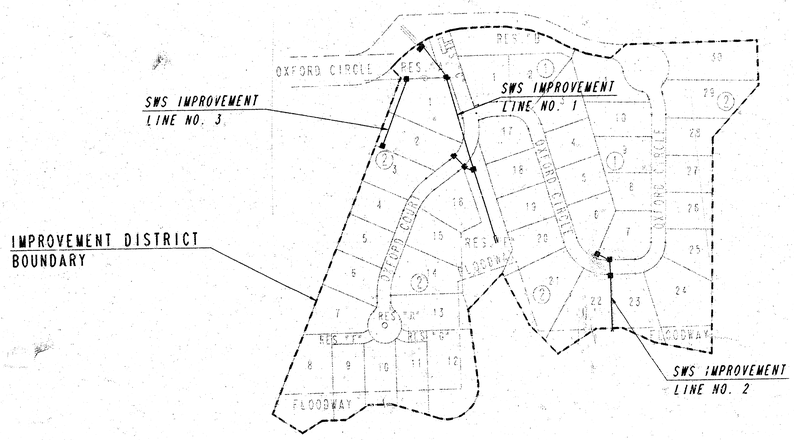

GENERAL NOTES

UNDERGROUND UTILITY SERVICE LINES AND OVERHEAD UTILITY POLE LINES ARE TO BE ADJUSTED AS NECESSARY BY OTHERS PRIOR TO CONSTRUCTION UNLESS THE PLANS SPECIFICALLY CALL FOR THEIR ADJUSTMENT BY THE CONTRACTOR. EXISTING UTILITIES AND THEIR LOCATION, AS SHOWN ON THE PLANS, REPRESENT THE BEST INFORMATION OBTAINABLE FOR DESIGN. LOCATION INFORMATION HAS BEEN OBTAINED FROM THE VARIOUS UTILITY COMPANIES AND IS EITHER FROM COMPANY RECORD DRAWINGS OR COMPANY PROVIDED FIELD LOCATIONS. THE CONTRACTOR WILL BE REQUIRED TO WORK AROUND EXISTING UTILITIES WITHIN THE RIGHT-OF-WAY WHICH DO NOT CONFLICT WITH PROPOSED CONSTRUCTION.

CONTRACTOR SHALL SATISFY HIMSELF OF SUBSURFACE CONDITIONS PRIOR TO CONSTRUCTION.

TREES AND SHRUBS IN PUBLIC RIGHT-OF-WAY WHICH ARE IN DIRECT CONFLICT WITH PROPOSED NEW CONSTRUCTION SHALL BE REMOVED BY THE CONTRACTOR WITH THE ENGINEER'S APPROVAL. TREES AND SHRUBS WHICH ARE NOT IN DIRECT CONFLICT WITH PROPOSED NEW CONSTRUCTION SHALL BE SAVED AND PROTECTED FROM DAMAGE.

ALL TREE TRIMMINGS OR TREES REMOVED SHALL BE DISPOSED OF OFF SITE BY THE CONTRACTOR AT NO ADDITIONAL COST TO THE OWNER.

ALL DISPOSAL SITES MUST BE APPROVED BY THE KANSAS DEPARTMENT OF HEALTH AND ENVIRONMENT. MATERIAL EITHER STOCKPILED OR DISPOSED OF IN A FLOOD PLAIN WOULD REQUIRE A KANSAS STATE BOARD OF AGRICULTURE PERMIT. ANY MATERIAL DUMPED IN WATERS OF THE UNITED STATES OR WETLANDS IS SUBJECT TO U.S. CORPS OF ENGINEERS PERMITTING REGULATIONS. ANY MATERIAL BURIED OR STOCKPILED BEYOND APPROVED CONSTRUCTION LIMITS WOULD REQUIRE ADDITIONAL ARCHEOLOGICAL INVESTIGATIONS UNLESS BURIED IN A PREVIOUSLY APPROVED BORROW LOCATION.

EXCESS EXCAVATED MATERIAL AND EXCESS TOPSOIL SHALL BE STOCKPILED OR WASTED WITHIN THE PLAT LIMITS. THE CONTRACTOR SHALL CONTACT THE OWNER'S ENGINEER AT 262-2691 FOR INFORMATION PERTAINING TO THE ACCEPTABLE LOCATIONS FOR THE DISPOSITION OF EXCESS MATERIAL. WASTE MATERIAL SHALL BE GRADED SMOOTH AND SLOPED TO DRAIN. THIS WORK SHALL BE CONSIDERED SUBSIDIARY TO *"POND AND SWALE GRADING"*.

CONTRACTOR SHALL PROVIDE A MINIMUM FORTY-EIGHT (48) HOUR ADVANCE NOTICE (EXCLUDING WEEKENDS AND HOLIDAYS) PRIOR TO BEGINNING ANY EXCAVATION, TO KANSAS ONE-CALL SYSTEM, A UTILITY LOCATION SERVICE, AT (316) 687-2470 TO REQUEST THE FOLLOWING UTILITY COMPANIES TO LOCATE ALL EXISTING LINES WITHIN THE PROJECT AREA: KPL/GAS SERVICE, K.G.&E., SOUTHWESTERN BELL TELEPHONE, MULTIMEDIA CABLEVISION, CITY OF WICHITA SEWER MAINTENANCE AND CITY OF WICHITA WATER DEPARTMENT.

THE CONTRACTOR SHALL BE RESPONSIBLE FOR PRESERVING PROPERTY IRONS. THE CONTRACTOR WILL BE REQUIRED TO RE-ESTABLISH ANY PROPERTY IRONS WHICH ARE DAMAGED OR DESTROYED BY HIS CONSTRUCTION OPERATIONS. SUCH IRONS SHALL BE RE-ESTABLISHED BY A LICENSED LAND SURVEYOR IN ACCORDANCE WITH STATE LAWS.

THE WATER DEPARTMENT SHALL FIELD LOCATE WATER VALVES ONE TIME DURING CONSTRUCTION WHEN REQUESTED BY THE CONTRACTOR. IT SHALL BE THE CONTRACTOR'S RESPONSIBILITY TO PRESERVE SUCH FIELD LOCATIONS DURING THE CONSTRUCTION PROCESS. WATER VALVES, WATER VALVE BOXES OR FIRE HYDRANTS DAMAGED DURING CONSTRUCTION SHALL BE REPAIRED BY THE CONTRACTOR AT HIS OWN EXPENSE.

Booked Per Plan
2-2-93

DRAWING NAME: 36-91637-3 TITLE
LOCATION:
CENTER COORDINATES:
ADDITIONAL NOTES:
DATE LAST WORKED ON:
SPECIAL INSTRUCTIONS:

APRIL, 1992

PLANS PREPARED BY
PROFESSIONAL ENGINEERING CONSULTANTS, P.A.
ENGINEERS
WICHITA, KANSAS

CHARLES S. SHOWN
LICENSED
7581
KANSAS
PROFESSIONAL ENGINEER

PROJECT NO.	SHEET NO.	TOTAL SHEETS
468-76-245-82202-000-000-001	2	1

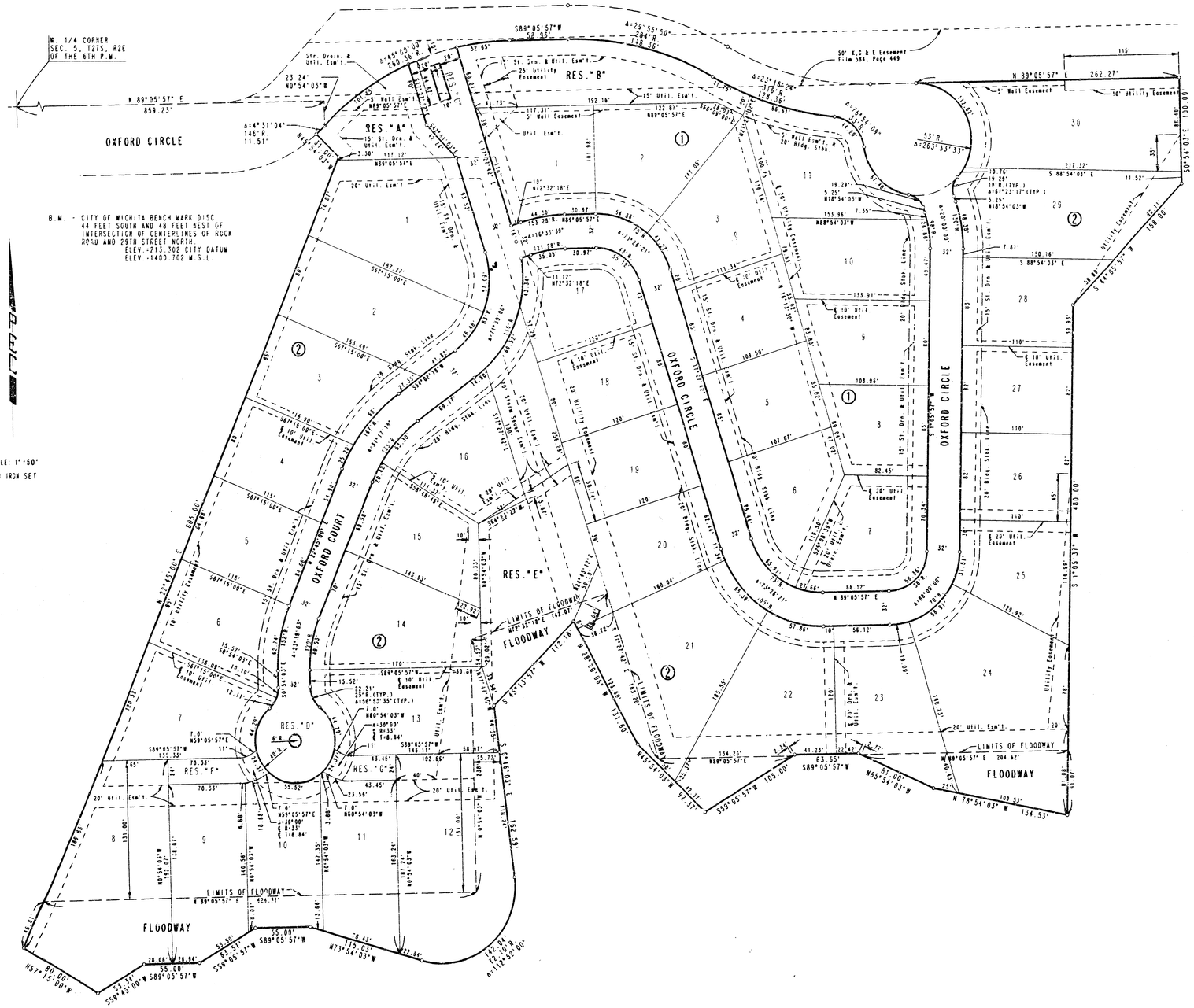

OXFORD ADDITION

TO WICHITA, SEDGWICK COUNTY, KANSAS

PLAN		BY	DATE
NOTE BOOK NO.	SURVEYED		
	PLOTTED		
	ALIGNMENT CHECKED		
	R.I. OF WAY CHECKED		

DRAWING NAME: 32-92049 PLAT
LOCATION: 04 447
CENTER COORDINATES:
ROTATION ANGLE:
DATE LAST WORKED ON:
SPECIAL INSTRUCTIONS:

STORM WATER SEWER NO. 431

PLAT

PROFESSIONAL ENGINEERING CONSULTANTS, P.A.
ENGINEERS
WICHITA, KANSAS

Designed by		Checked by	
Drawn by	DEP	Date MAR., 1992	Job No. 92049-3

2

NOTE: SEE SHEET NO. 6 FOR POND, SWALE AND RIPRAP DETAILS.

Proposed MH
Top:
℄ In=198.15
℄ Out=196.15

℄ Oxford Court Sta. 13+25.00, 17.67' Lt.
Const. Std. Type 1A Curb Inlet
L=6'-4", W=4'-4"
Top Elev.=205.50
Install 35.3 L.F. 15" RCP(NW)
℄ In=200.05, ℄ Out=199.95
See Sh. No. 10

Install 32 L.F.
Excavatable Flowable
Fill to Elev. 202.8

℄ Oxford Court Sta. 13+25.00, 17.67' Rt.
Const. Std. Type 1A Curb Inlet
L=5'-4", W=4'-4"
Top Elev.=205.50
℄ Out=200.40
See Sh. No. 10

SCALE: 1"=20'

Sta. 3+68.7, Line No. 1=
℄ Oxford Court Sta. 11+20.03, 23.00' Rt.
Const. Std. R.C. Manhole
L=7'-0", W=7'-0", H=7'-0", Stock=0.95'
Top Elev.=206.60
Install 88.3 L.F. 42" RCP(NW)
Connect 42" RCP(W)
Install 58.1 L.F. 15" RCP(NE)
See Sh. No. 7

Backfill area between R.C. Manhole and Exist. Sidewalk is directed by the Engineer. This work shall be subsidiary to "R.C. Manhole"

8'-0" Min.
12" min
2:1 min
2:1 min
Exist. Ground
Compact to 95% Std. Density

PROTECTIVE FILL DETAIL

Sta. 4+57.0, Line No. 1=
℄ Oxford Court Sta. 10+38.00, 58.00' Rt
Const. Std. R.C. Manhole
L=5'-0", W=5'-0", H=6'-6", Stock=0.21'
Top Elev.=206.00
Connect Exist. 30"x19" HERCP
Remove 30" End Sections (2) and
Install 2-8.0 L.F. 30" RCP(NW)
See Sh. No. 7

Remove existing
R.C. Manhole and
16.5 L.F. 42" RCP

Install 40 L.F.
Excavatable Flowable
Fill to elev. 208.3

CAUTION!!!
8" Water *
Contact C.U.W.

CAUTION!!!
4" Gas *
Contact KPL

30°

Remove 72 S.Y.
Existing Riprap

Sta. 10+00.00 ℄ Oxford Court
Sta. 12+10.66 ℄ Exist. Oxford Circle

℄ Curve Data
Δ=71°-30'-00"
D=57°-52'-28"
R=99.00'
L=123.54'
T=71.27'
E=22.99'

13+40.23 P.T.

Swale

54" RCP

48" RCP

42" RCP

12+16.59 P.C.

Install 106.7 S.Y.
Light Stone Riprap
See Sh. Nos. 5 & 6

Sta. 0+00.0, Line No. 1
Const. R.C. Headwall
Install 156.5 L.F. 54"RCP(N)
See Sh. No. 9

Sta. 1+56.5, Line No. 1=
℄ Oxford Court Sta. 13+18.23, 36.00' Lt.
Const. Std. R.C. Manhole
L=5'-0", W=7'-6", H=7'-6", Stock=0.2'
Top Elev.=205.00
Install 212.2 L.F. 48" RCP(N)
Install 20.2 L.F. 18" RCP(NW)
See Sh. No. 7

Install 55 L.F.
Excavatable Flowable
Fill to Elev. 203.9

Sta. 12+16.69 ℄ Oxford Court=
Sta. 50+00.00 ℄ Oxford Circle

OXFORD COURT

OXFORD CIRCLE

Prop. 8" Water

Remove 108 S.Y.
Existing Riprap

Sta. 10+98.99, 29.0' Lt.
Const. 2'x2' Drop Inlet
Top Elev.=205.50
℄ Out=202.41
See Sh. No. 8

OXFORD CIRCLE

No	Revision	By	Date
1	ADD DROP INLET & 15" RCP		

PLAN | SURVEYED | DATE | BY
NOTE BOOK | PLOTTED
NO. | ALIGNMENT CHECKED
BY: CH, KB | R/W & UTIL. VERIFIED
STRUCTURE No's IS CH, KB

PROFILE | SURVEYED
NOTE BOOK | PLOTTED
NO. | ALIGNMENT CHECKED
BY: CH, KB | R/W & UTIL. VERIFIED
STRUCTURE No's IS CH, KB

DRAWING NAME: J:\9049-3 SWS 2
LOCATION: CH 423
CENTER MOUNTED.
ROTATION ANGLE:
DATE LAST WORKED ON:
SPECIAL INSTRUCTIONS:

Sta. 0+00.0, Line No. 1
Const. R.C. Headwall

Prop. 8" Sanitary Sewer
℄=198.88

Sta. 1+56.5, Line No. 1
Const. Std. R.C. Manhole
Top Elev.=205.00
Prop. 8" Water
Top Pipe=196.66

Exist. 8" Sanitary Sewer
℄=194.84

Sta. 3+68.7, Line No. 1
Const. Std. R.C. Manhole
Top Elev.=206.60

Exist. 4" Gas Line
(KPL/Gas Service)

Exist. 8" Water

Sta. 4+57.0, Line No. 1
Const. Std. R.C. Manhole
Top Elev.=206.00

Protective Fill(Typ.)
See Detail above
Excavatable Flowable Fill
Existing Ground
Proposed Ground
(by others)

DWS=203.4

Static Pool=198.0±

Riprap

℄=199.89
18" (NW)

℄=199.85±
Exist. 42" RCP(W)

℄=200.30
15" (NE)

30" RCP-℄=200.27
30" RCP-℄=200.12
30"x19" HERCP-℄=200.19

156.5 L.F. 54" RCP
@ +3.70%

212.2 L.F. 48" RCP
@ +0.66%

88.3 L.F. 42" RCP
@ +0.10%

℄=191.25 Headwall
℄ In=191.14

℄=193.56

℄=195.41

℄ Out=197.50
℄ In=198.00

℄=197.26

℄=198.29

℄=198.62

℄=198.95

℄=199.28

℄ Out=199.40
℄ In=199.91

℄=199.94

℄=199.99

℄ Out=200.00

0+00 1 2 3 4 5+00

210 205 200 195 190

SWS IMPROVEMENT
LINE NO. 1
STA. 0+00.0 TO STA. 4+57.0

PROFESSIONAL ENGINEERING CONSULTANTS, P.A.

Designed by: KB
Drawn by: DJH
Checked by: CH
Approved by: MJW

Sheet 5 of 12

SCALE: 1"=10'

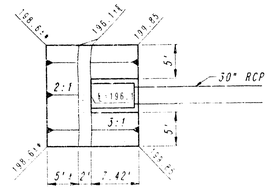

RIPRAP DETAIL

* MATCH EXISTING

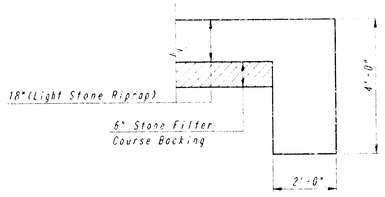

TYPICAL SECTION THRU TOEWALL

NO SCALE

NOTES

1. ALL RIPRAP FOR THIS PROJECT SHALL BE NATURAL STONE. NEITHER BROKEN CONCRETE, FABRIC ENVELOPE, NOR PREMIXED DRY PACKAGED CONCRETE BAG ALTERNATES WILL BE ALLOWED.
2. TOEWALLS SHALL BE INSTALLED ALONG ALL EDGES OF STONE RIPRAP.
3. GROUTING OF THE SURFACE OF THE RIPRAP SHALL NOT BE PERFORMED. GROUTING OF THE TOEWALLS SHALL BE PERFORMED PER CITY SPECIFICATIONS.

PLAN — SURVEYED / PLOTTED / NOTE BOOK / PLAN CHECKED / NO. ___ / BY: ___ / DATE: ___ / AS-BUILT CHECKED / BY: ___ / DATE: ___ / NOTE: ___ / CONSTRUCTION NOTES ON SHEET NO. 4

SCALE: 1"=20'

Sta. 0+99.3, Line No. 2
Const. R.C. Headwall
Install 118.6 L.F. 30" RCP(N)
See Sh. No. 9

Warp Channel and Banks as shown. Seed disturbed areas outside Riprap. This work to be subsidiary to Riprap

Install 25.2 L.F. Light Stone Riprap See Detail this sheet

Sta. 1+00.0, S.W.S. Line No. 2

Install 32 L.F. Excavatable Flowable Fill to Elev. 201.6

Sta. 2+18.3, Line No. 2
℄ Oxford Circle Sta. 55+58.80, 17.67' Rt.
Const. Std. Type 1A Curb Inlet
L=6'-4", W=4'-4"
Top Elev.=204.01
Install 35.3 L.F. 24" RCP(N)
See Sh. No. 10

Prop. 8" Water

OXFORD CIRCLE

56

55

Sta. 2+85.7, Line No. 2=
℄ Oxford Circle Sta. 55+19.15, 26.0' Lt.
Const. 2'x2' Drop Inlet
Top Elev.=203.00
See Sh. No. 8

55+51.80 PT

℄ Curve Data

56+17.91 PC

Sta. 2+53.6, Line No. 2=
℄ Oxford Circle Sta. 55+58.80, 17.67' Lt.
Const. Std. Type 1A Curb Inlet
L=6'-4", W=4'-4"
Top Elev.=204.01
Install 32.1 L.F. 15" RCP(NW)
See Sh. No. 10

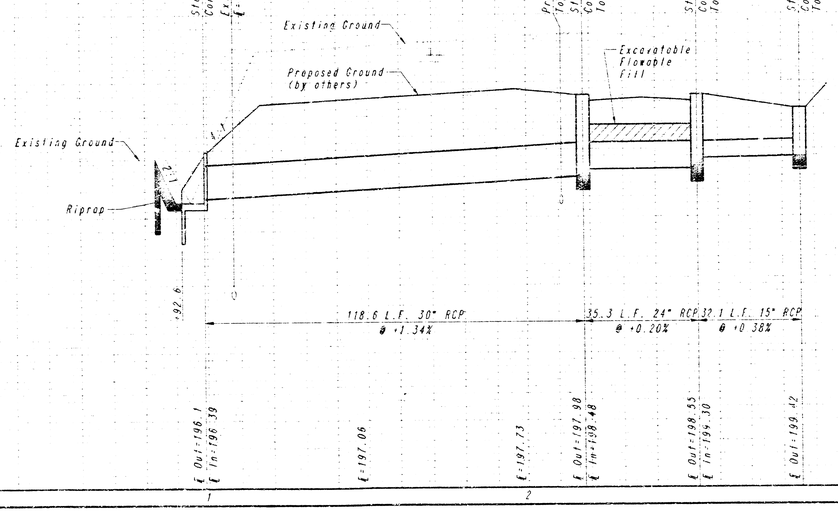

PROFILE — SURVEYED / PLOTTED / NOTE BOOK / PROFILE CHECKED / BY: B.W.S. NOTED / STRUCTURE NOTES ON SHEET NO. ___ / DATE: ___

DRAWING NAME: S7 9-099 3 SWS 1
CONSTRUCTION DATES
CONSTRUCTION NOTES
RELATION ANGLES
DATE EASEMENTS RECORDED ON
SPECIAL INSTRUCTIONS

PROFESSIONAL ENGINEERING CONSULTANTS, P.A.

SWS IMPROVEMENT
LINE NO. 2
STA 0+99.3 TO STA 2+85.7

Sheet



SWS IMPROVEMENT
LINE NO. 3
STA. 0+00.0 TO STA. 1+58.0
STORM WATER SEWER NO. 451
PROFESSIONAL ENGINEERING CONSULTANTS, P.A.
ENGINEERS
WICHITA, KANSAS
Designed By CSB, CDD
Job No. 32 92049 3
Drawn By DEP
Date MAR., 1992
Sheet 5 of 11
Sta. 1+58.0, Line No. 3
Const. 2'x2' Drop Inlet
Top Elev.=205.00
See Sh. No. 8
Sta. 0+00.0, Line No. 3
Const. 4'x2' Drop Inlet
Top Elev.=205.00
Install 158.0 L.F. 15" RCP(S)
See Sh. No. 8
Proposed Ground (by others)
Exist. Ground
158.0 L.F. 15" RCP
Exist. 8" Sanitary Sewer
Exist. ℄=200.30
℄ In=201.96
℄=202.15
℄=202.34
℄=202.53
℄ Out=202.56
0+00
210
205
200
SCALE 1"=20'
NOTE: CONSTRUCT 4'x2' DROP INLET ON EXISTING 42" RCP. PRICE BID SHALL BE FULL COMPENSATION FOR ALL LABOR, MATERIALS, REMOVAL OF EXIST. 42" PIPE, GROUTING AND INCIDENTALS NECESSARY TO BUILD INLET COMPLETE.
PLAN
NOTE BOOK NO.
SURVEYED
PLOTTED
ALIGNMENT CHECKED
RT. OF WAY CHECKED
BY
DATE
PROFILE
NOTE BOOK NO.
SURVEYED
PLOTTED
GRADES CHECKED
B.M.'s NOTED
STRUCTURE NOTES CH'KD
BY
DATE
DRAWING NAME: 32 92049-3 SWS 5
LOCATION: 04 #117
CENTER COORDINATES:
ROTATION ANGLE:
DATE LAST WORKED ON:
SPECIAL INSTRUCTIONS:

PROJECT NO.	SHEET NO.	TOTAL SHEETS
468-76-245-82202-000-000-001	5	11

SCALE: 1"=20'

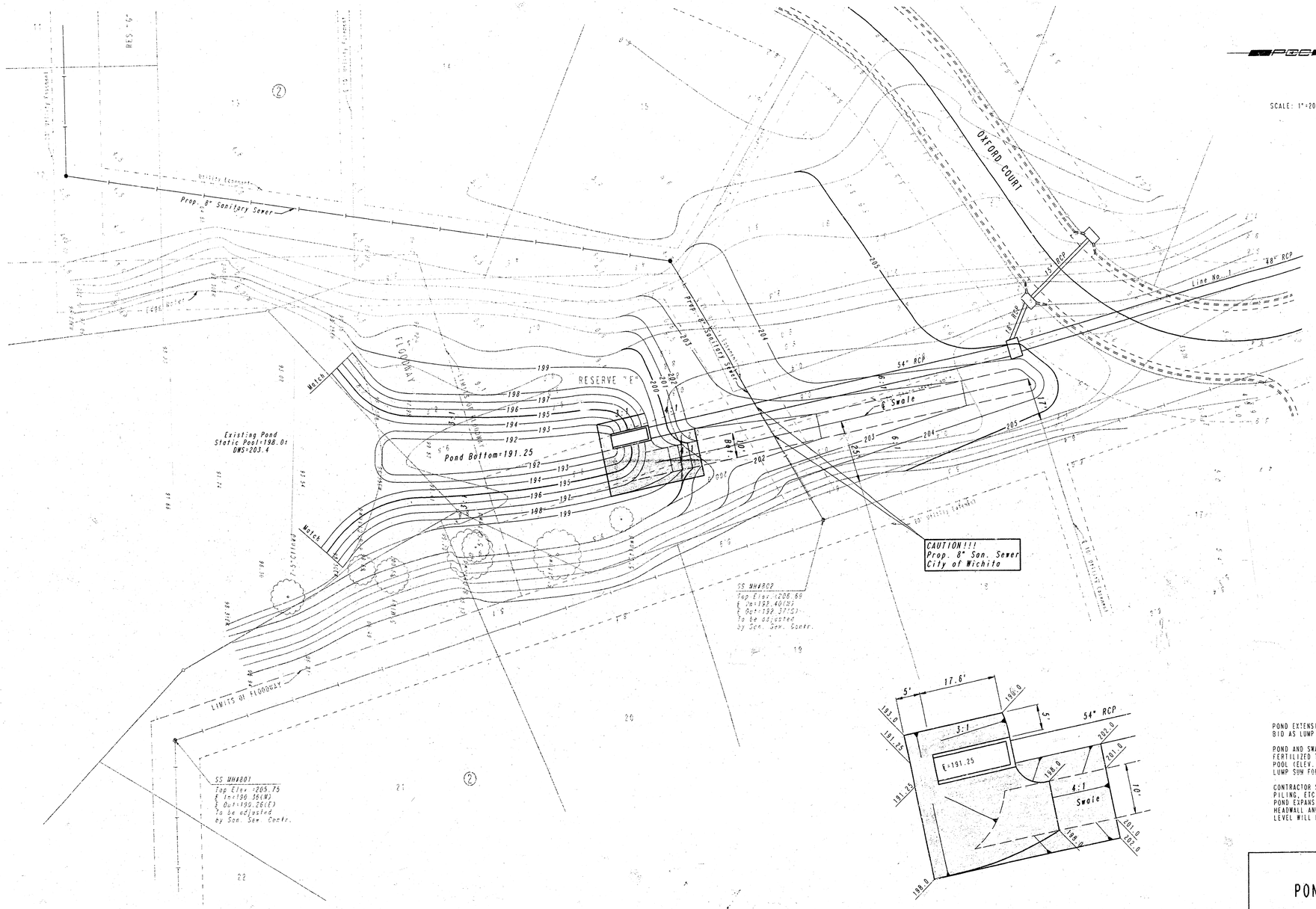

RIPRAP DETAIL

SEE SHEET NO. 4 FOR RIPRAP TOEWALL DETAIL

SCALE: 1"=10'

NOTES

POND EXTENSION AND SWALE CONSTRUCTION SHALL BE BID AS LUMP SUM FOR "POND AND SWALE GRADING".

POND AND SWALE SHALL BE SEEDED, MULCHED AND FERTILIZED TO C.O.W. SPECIFICATION ABOVE STATIC POOL (ELEV. 198.0). THIS WORK SHALL BE BID AS LUMP SUM FOR "SEEDING".

CONTRACTOR SHALL CONSTRUCT COFFER DAM, SHEET PILING, ETC. AS REQUIRED TO PROPERLY EXCAVATE THE POND EXPANSION AND TO PROPERLY INSTALL THE HEADWALL AND RIPRAP. LOWERING THE EXISTING POND LEVEL WILL NOT BE ALLOWED.

STORM WATER SEWER NO. 431

POND AND SWALE PLAN

PROFESSIONAL ENGINEERING CONSULTANTS, P.A.
ENGINEERS
WICHITA, KANSAS

Designed by	CSB, GDD	Checked by	
Drawn by	DEP	Date MAR., 1992	Job No. 92049-3

PLAN		BY	DATE
NOTE BOOK NO.	SURVEYED		
	PLOTTED		
	ALIGNMENT CHECKED		
	RT. OF WAY CHECKED		

DRAWING NAME: 32-92049-3 SWS 4
LOCATION: 04 431
CENTER COORDINATES:
ROTATION ANGLE:
DATE LAST WORKED ON:
SPECIAL INSTRUCTIONS:

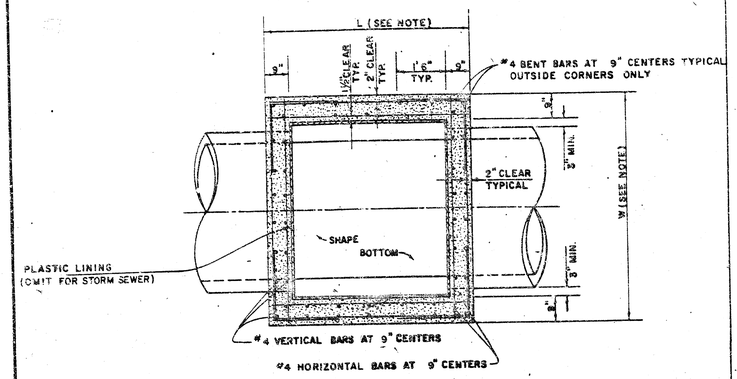

TOP VIEW

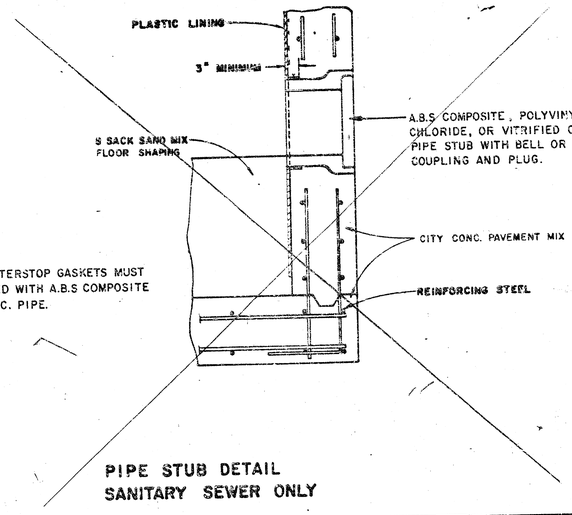

NOTE: WATERSTOP GASKETS MUST BE USED WITH A.B.S COMPOSITE OR P.V.C. PIPE.

PIPE STUB DETAIL
SANITARY SEWER ONLY

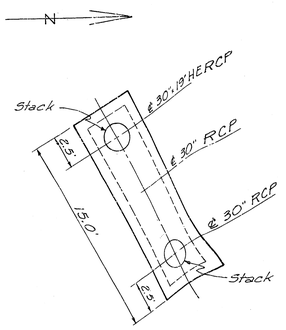

MANHOLE STACK LOCATION DIAGRAM
Sta. 4+57.0 SWS Line No. 1

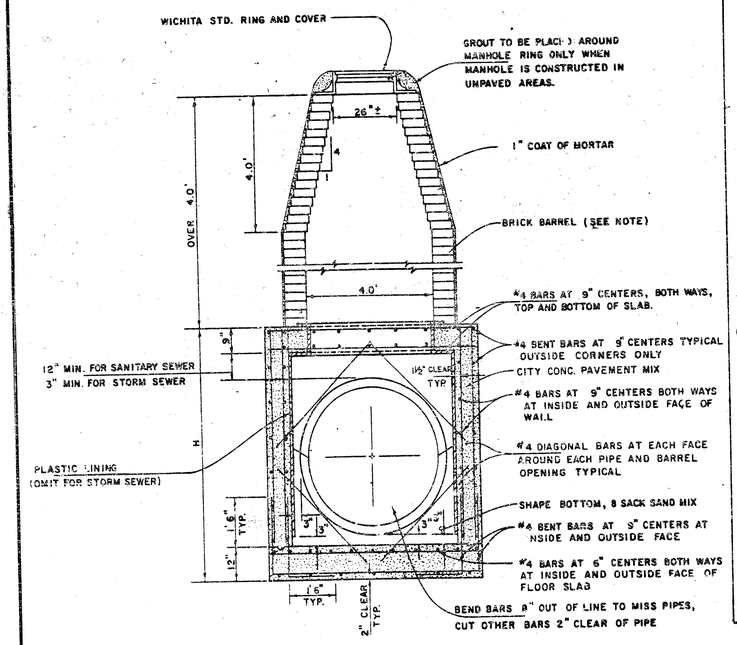

REINFORCED CONCRETE MANHOLE
DEPTH OF STACK: OVER 4.0'
SCALE 1" = 2'

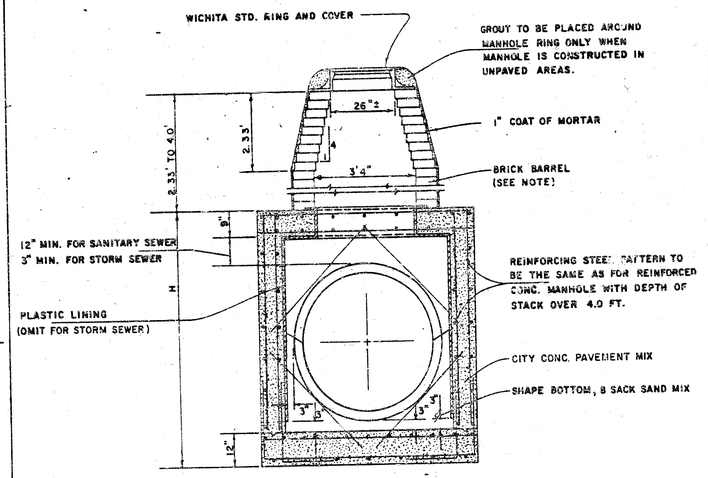

REINFORCED CONCRETE MANHOLE
DEPTH OF STACK: 2.33' TO 4.0'
SCALE 1" = 2'

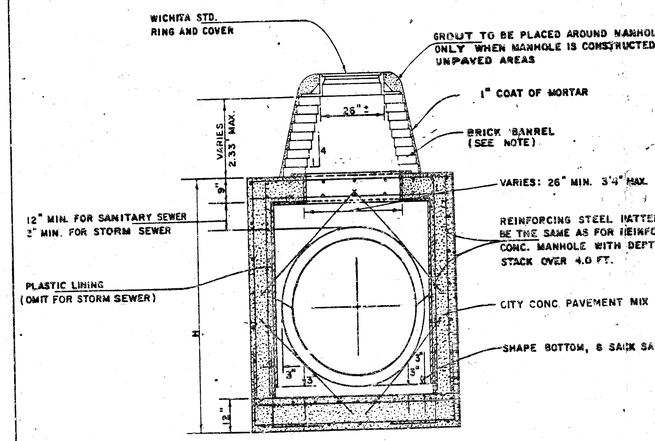

REINFORCED CONCRETE MANHOLE
DEPTH OF STACK: 0' TO 2.33'
SCALE 1" = 2'

NOTE:
BRICK BARRELS LESS THEN 16' DEEP SHALL HAVE 8" WALLS EXCEPT WHEN LOCATED WITHIN PUBLIC STREET OR ALLEY PAVEMENT THEN THE WALL SHALL BE 12" BRICK BARRELS MORE THEN 16' DEEP SHALL HAVE 12" WALLS. THE "L" AND "W" DIMENSIONS SHALL BE A MINIMUM OF 5'6" FOR BRICK BARRELS WITH 8" WALLS AND 6'2" FOR BRICK BARRELS WITH 12" WALLS WHEN THE BRICK BARRELS ARE OVER 4 FT. IN HEIGHT. COMLETED MANHOLE SHALL BE WITHOUT LEAKS AND WATERTIGHT.

REVISIED 1-7-85

STANDARD DETAILS
REINFORCED CONCRETE MAN
CITY OF WICHITA

FEBRUARY 1984

C.O.W. Proj No. 468-76-245-82202-000-000-001

NOTE: Grates shall be imprinted on the top surface with "CITY OF WICHITA" using letters at least 1" in height. Other marking methods may be used only if approved by the engineer.

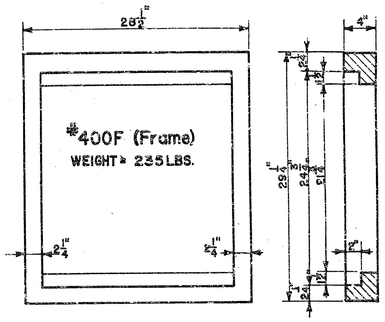

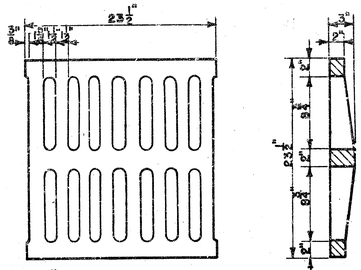

24"x24" Frame & Grate Detail

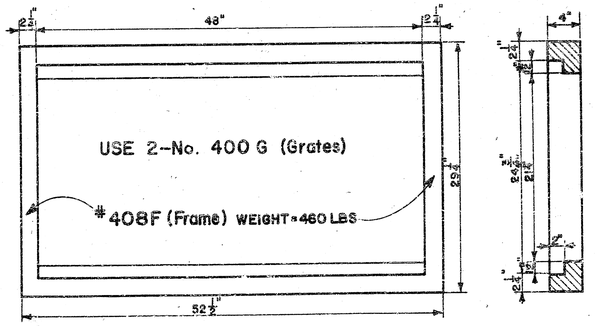

Double 24"x24" Frame Detail

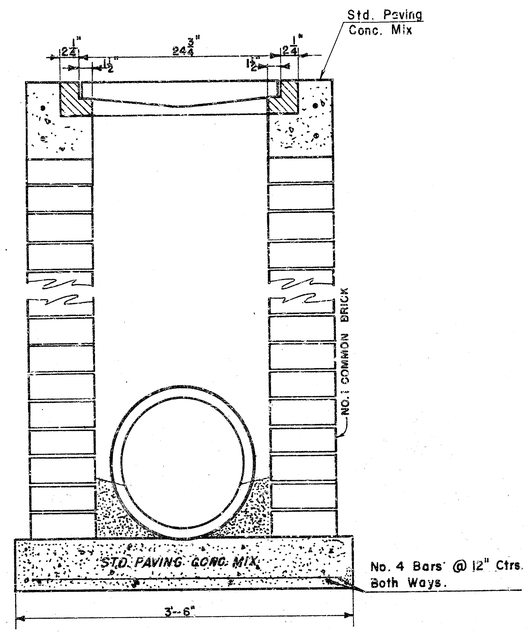

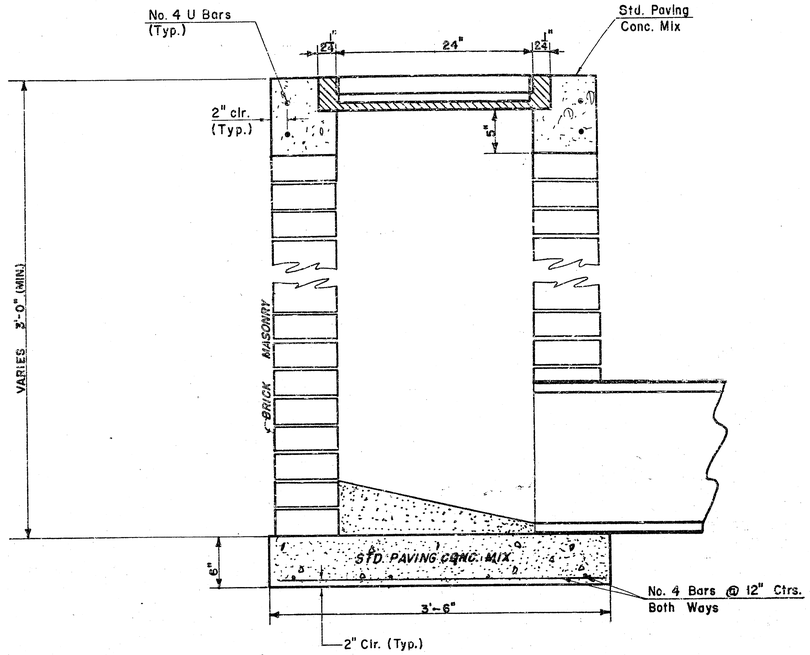

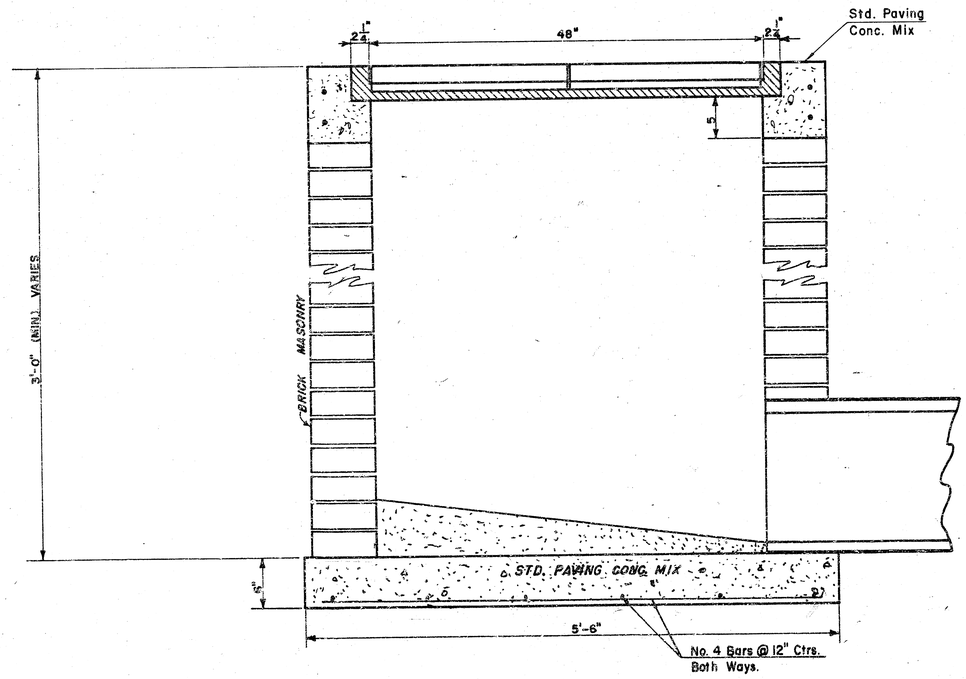

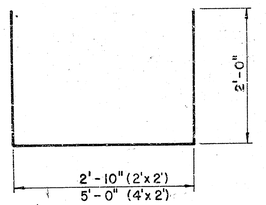

NO. 4 U BAR (4 Req'd.)

DROP INLET DETAILS

M.E. Lindebak, City Engineer
City of Wichita, Kansas
Project Oxford Add. S.W.S. No. 431
Project No. 468-76-245-82202
Date: April, 1992
Scale: 1-1/2" = 1'-0"

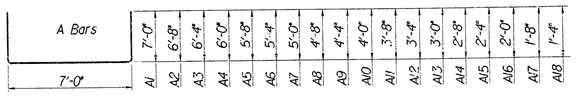

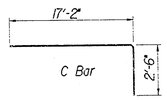

BENDING DIAGRAMS

All dimensions are out to out of bars.

RE-BAR SCHEDULE				
Mark	Shape	No.	Length	Weight
A1		2	21'-0"	28.06
A2		1	20'-4"	13.58
A3		1	19'-8"	13.14
A4		1	19'-0"	12.69
A5		1	18'-4"	12.25
A6		1	17'-8"	11.80
A7		1	17'-0"	11.36
A8		1	16'-4"	10.91
A9		1	15'-8"	10.47
A10		1	15'-0"	10.02
A11		1	14'-4"	9.57
A12		1	13'-8"	9.13
A13		1	13'-0"	8.68
A14		1	12'-4"	8.24
A15		1	11'-8"	7.79
A16		1	11'-0"	7.35
A17		1	10'-4"	6.90
A18		1	9'-8"	6.46
B1	——	2	17'-3"	23.05
B2	——	2	14'-7"	19.48
B3	——	2	10'-0"	13.36
B4	——	2	5'-6"	7.35
C		8	19'-8"	105.10
D1	——	4	4'-9"	12.69
D2	——	4	3'-8"	9.80
D3	——	4	7'-2"	19.15
E	——	6	7'-2"	28.72
F	——	2	18'-3"	24.38
Total Rebars			462	Lbs.
Concrete			8.00	C.Y.

All Concrete Reinforcement to be #4 bars.

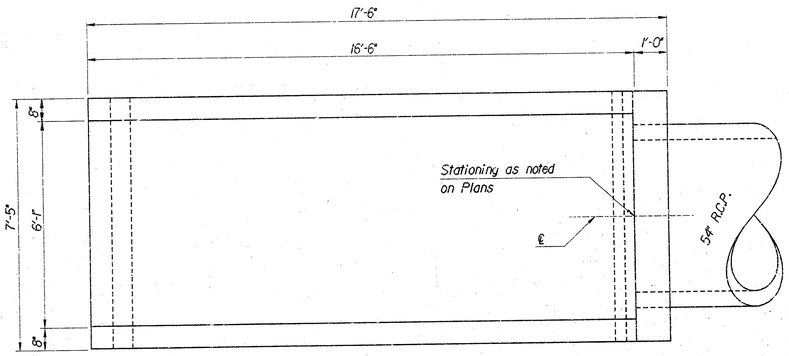

PLAN

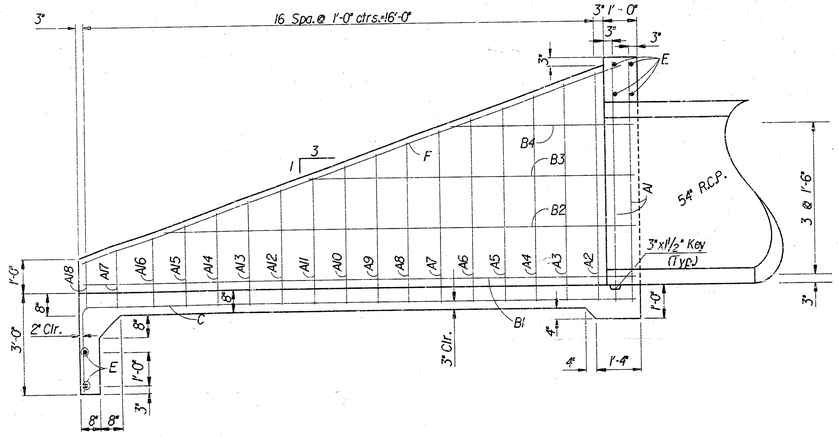

SECTION

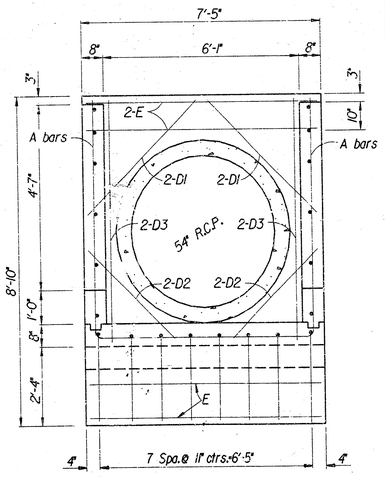

ELEVATION

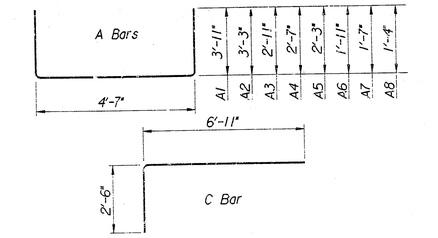

BENDING DIAGRAMS

All dimensions are out to out of bars.

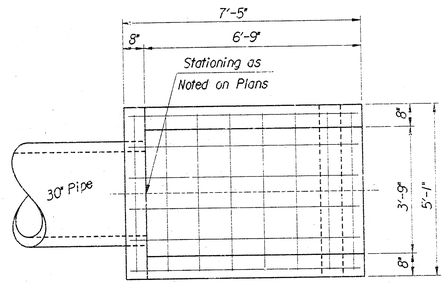

PLAN

PROJECT NO.	SHEET NO.	TOTAL SHEETS
472-76-245-82043-000-000-001	9	11

RE-BAR SCHEDULE				
Mark	Shape	No.	Length	Weight
A1		1	12'-5"	8.29
A2		1	11'-1"	7.40
A3		1	10'-5"	6.96
A4		1	9'-9"	6.51
A5		1	9'-1"	6.07
A6		1	8'-5"	5.62
A7		1	7'-9"	5.18
A8		1	7'-3"	4.84
B1	——	2	7'-2"	9.57
B2	——	2	6'-6"	8.68
B3	——	2	4'-0"	5.34
B4	——	2	1'-6"	2.00
C		6	9'-5"	37.74
D1	——	4	3'-0"	8.02
E	——	3	4'-10"	9.69
F	——	2	7'-6"	10.02
Total Rebars			142	Lbs.
Concrete			2.34	C.Y.

All Concrete Reinforcement to be #4 bars.

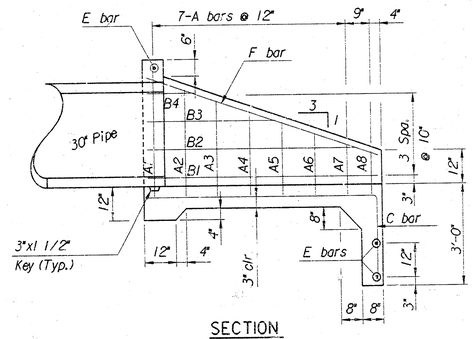

SECTION

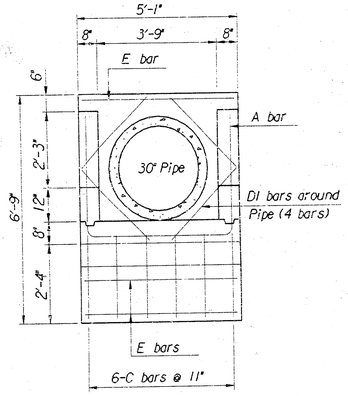

FRONT

CONCRETE HEADWALL NOTES

CONCRETE: BEVEL ALL EXPOSED EDGES WITH A 3/4" TRIANGULAR MOLDING OR FINISH WITH AN APPROVED EDGING TOOL. CONCRETE SHALL BE AS PER CITY OF WICHITA STANDARD SPECIFICATIONS FOR CONCRETE PAVING MIX EXCEPT THAT IT SHALL HAVE A MINIMUM 28 DAY COMPRESSIVE STRENGTH OF 4,000 P.S.I. ALL PIPES SHALL BE FLUSH CUT PRIOR TO BEING CAST INTO THE HEADWALL.

REINFORCING STEEL: ALL DIMENSIONS RELATIVE TO REINFORCING STEEL ARE TO CENTERLINE OF BAR UNLESS OTHERWISE NOTED. ALL CLEARANCES SHALL BE 2" UNLESS OTHERWISE NOTED. ALL REINFORCING STEEL SHALL CONFORM TO A.S.T.M. DESIGNATION A615 GRADE 60 AND SHALL BE EPOXY COATED.

PAYMENT: A DEDUCTION IN CONCRETE QUANTITIES HAS BEEN MADE FOR THE PIPE OPENING. THE "HEADWALL (54") (REINFORCED CONCRETE)" AND "THE HEADWALL (30") (REINFORCED CONCRETE)" SHALL BE PAID FOR AT THE UNIT PRICE BID PER EACH IN PLACE INCLUDING CONCRETE, REINFORCING STEEL, EXCAVATION AND ALL OTHER MISCELLANEOUS MATERIALS, LABOR, TOOLS, EQUIPMENT AND INCIDENTALS NECESSARY TO COMPLETE THE WORK. QUANTITIES SHOWN ARE FOR INFORMATION ONLY.

SEE SHEET NO. 3 AND 5 FOR ADDITIONAL DETAILS.

No.	Revisions	By	Date
1			

STORM WATER SEWER NO. 431

54" HEADWALL AND 30" HEADWALL

PROFESSIONAL ENGINEERING CONSULTANTS, P.A.
ENGINEERS
WICHITA, KANSAS

Designed by	RAS	Checked by	RWA
Drawn by	RAS/JRA	Date	April 1992
		Job No.	92049-3

Drawing Name : usr/ustn/dgn/92049/3054hwlidgn
Center Coordinates : 0,0
Rotation Angle : 0
Date Last Worked On : 4/3/92
Special Instructions : None
Drawn By : JRA

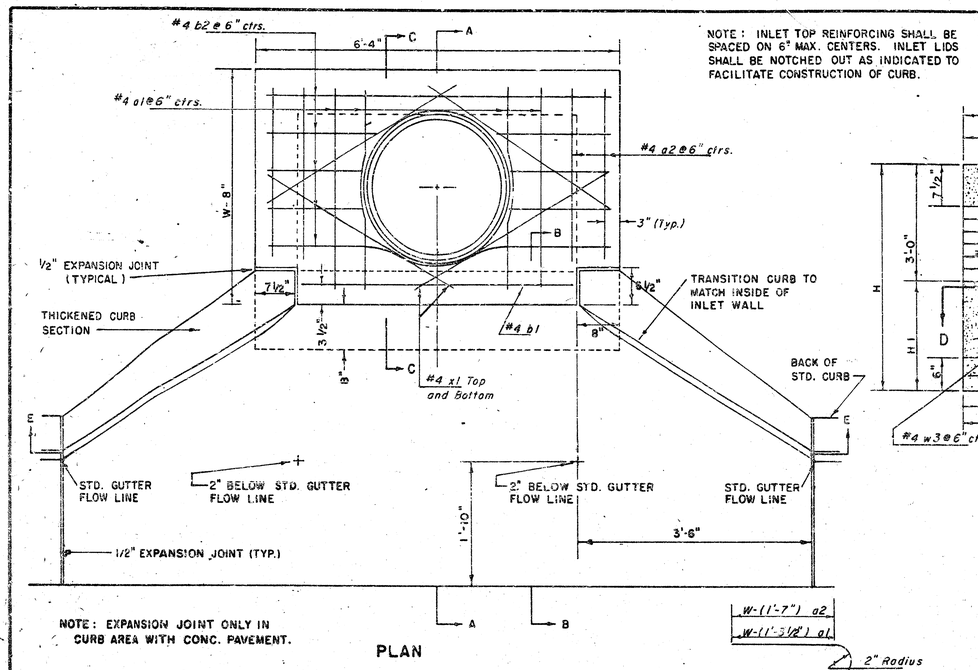

NOTE: EXPANSION JOINT ONLY IN CURB AREA WITH CONC. PAVEMENT.

PLAN

NOTE: INLET TOP REINFORCING SHALL BE SPACED ON 6" MAX. CENTERS. INLET LIDS SHALL BE NOTCHED OUT AS INDICATED TO FACILITATE CONSTRUCTION OF CURB.

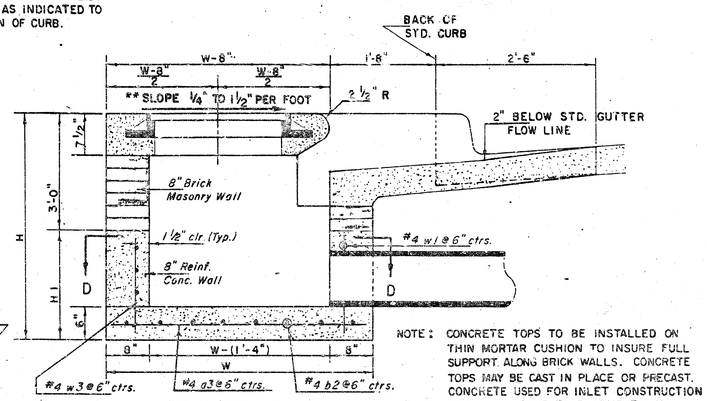

SECTION A-A

NOTE: CONCRETE TOPS TO BE INSTALLED ON THIN MORTAR CUSHION TO INSURE FULL SUPPORT ALONG BRICK WALLS. CONCRETE TOPS MAY BE CAST IN PLACE OR PRECAST. CONCRETE USED FOR INLET CONSTRUCTION SHALL BE CONCRETE PAVEMENT MIX WITH AIR ENTRAINMENT.

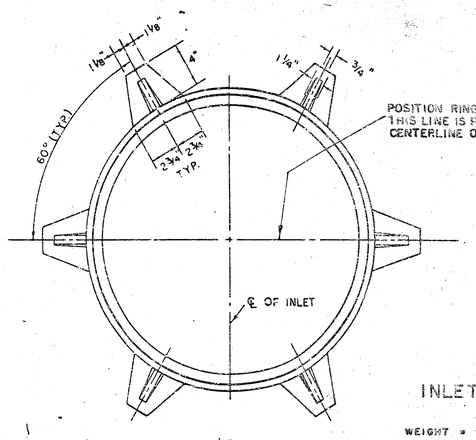

INLET FRAME

WEIGHT = 180 LBS.

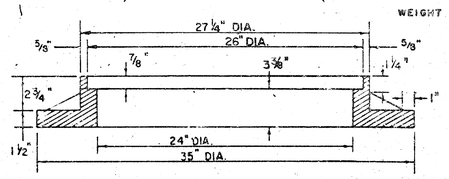

SEE CITY OF WICHITA STANDARD MANHOLE FRAME AND COVER DETAIL SHEET FOR COVER DETAILS TO BE USED WITH INLET FRAME.

BENDING DIAGRAM

NOTE: CONTRACTOR SHALL HAVE THE OPTION OF CONSTRUCTING 8" BRICK MASONRY WALLS BETWEEN THE CONCRETE INLET BASE AND TOP ON THIS INLET WHEN W = 6'4" AND H = 7'0" OR LESS.

ADDITIONAL CURB AND GUTTER CONSTRUCTION NECESSARY TO CONNECT SET-BACK INLET TO PAVEMENT WILL BE PAID FOR AT THE UNIT PRICE BID FOR EACH INLET HOOKUP.

INLET INVERT SHALL BE SHAPED WITH 6 SACK SAND MIX CONCRETE TO CREATE FLOW CHANNELS AND TO INCREASE HYDRAULIC EFFICIENCY SUCH THAT THE INLET WILL BE SELF CLEANING BETWEEN ALL INLET AND/OR OUTLET PIPES.

THE ENDS OF ALL PIPES INSTALLED IN INLETS SHALL BE CUT OFF FLUSH WITH THE INSIDE FACE OF THE INLET WALL.

**NOTE: Slope of Inlet Tops to match Sidewalk or Parking Slopes within Limits indicated.

PRECAST SLAB AND FLOOR REINFORCING

		W=4'-4"		W=5'-4"		W=6'-4"		W=7'-4"		W=8'-4"	
Mark	Size	No.	Length	No.	Length	No.	Length	No.	Length	No.	Length
a1	#4	6	6'-7"	6	8'-7"	6	10'-7"	6	12'-7"	6	14'-7"
a2	#4	4	6'-0"	4	8'-0"	4	10'-0"	4	12'-0"	4	14'-0"
a3	#4	13	4'-1"	13	5'-1"	13	6'-1"	13	7'-1"	13	8'-1"
b1	#4	1	4'-9"	1	4'-9"	1	4'-9"	1	4'-9"	1	4'-9"
*b2	#4	23	6'-1"	29	6'-1"	35	6'-1"	41	6'-1"	47	6'-1"
x1	#4	8	3'-10"	8	4'-2"	8	4'-6"	8	4'-10"	8	5'-2"

WALL REINFORCING

		W=4'-4"		W=5'-4"		W=6'-4"		W=7'-4"		W=8'-4"	
Mark	Size	No.	Length	No.	Length	No.	Length	No.	Length	No.	Length
w1	#4	(1)	6'-1"	(1)	6'-1"	(1)	6'-1"	(1)	6'-1"	(1)	6'-1"
w2	#4	(1)	4'-1"	(1)	5'-1"	(1)	6'-1"	(1)	7'-1"	(1)	8'-1"
w3	#4	32	(2)	36	(2)	40	(2)	44	(2)	48	(2)

* Field bend or cut Reinforcing as required for clearance.

(1) 4(H1-12"); (H1-12") Round down to nearest 0.5'

(2) H1-3"

STANDARD CURB INLET PRECAST TOPS			
W	PRE-CAST TOP SIZE	PIPE SIZE	CU. YD. CONC.
4' 4"	5'8"x 6'4" x7 1/2"	21" & SMALLER	0.38 ±
5' 4"	4'8"x 6'4" x7 1/2"	24" & 30"	0.51 ±
6' 4"	5'8"x 6'4" x7 1/2"	36" & 42"	0.64 ±
7' 4"	6'8"x 6'4" x7 1/2"	48" & 54"	0.77 ±
8' 4"	7'8"x 6'4" x7 1/2"	60" & 66"	0.90 ±

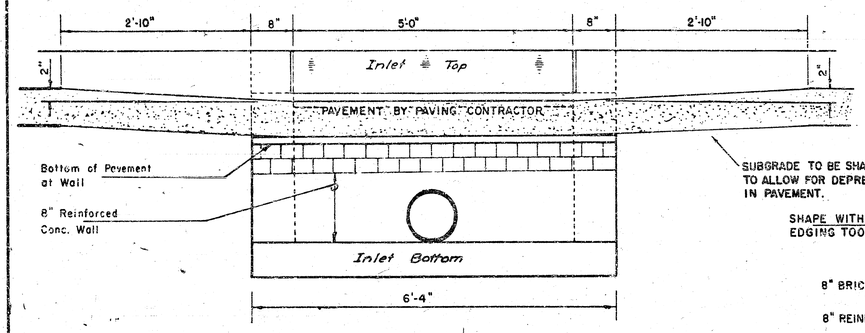

SECTION E-E

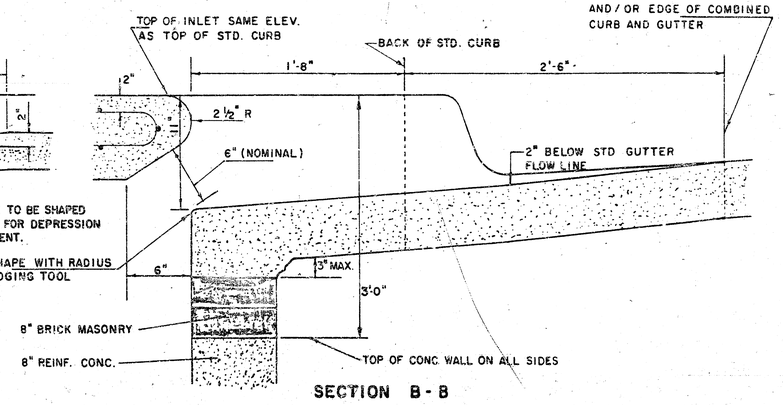

SECTION B-B

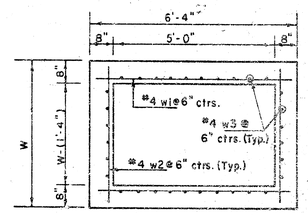

SECTION C-C

SECTION D-D

~~REVISED 11-30-1988~~

~~REVISED 12-31-1984~~ Revised 2-16-1988

DETAIL STANDARD TYPE IA CURB INLET

CITY OF WICHITA, KANSAS

INLET OPENING = 6" × 5'0"

JUNE 1984

C.O.W. Proj. No. 468-76-245-82202-000-000-001

MANHOLE FRAME AND COVER DETAIL

ADOPTED AS STANDARD DESIGN

BY

City of Wichita, Kansas

MANHOLE COVER

Weight: 180 Lbs.

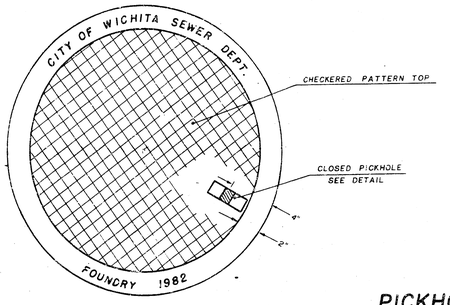

TOP VIEW

PICKHOLE DETAIL

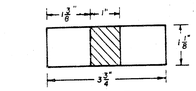

TOP VIEW

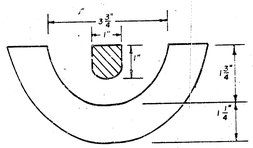

SECTION VIEW

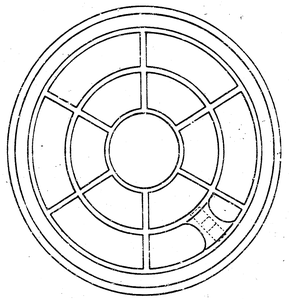

BOTTOM VIEW

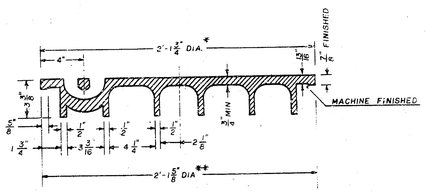

SECTION VIEW

* OUTSIDE DIA. TOP OF COVER

** OUTSIDE DIA. BOTTOM OF COVER

MANHOLE FRAME

Weight: 240 Lbs.

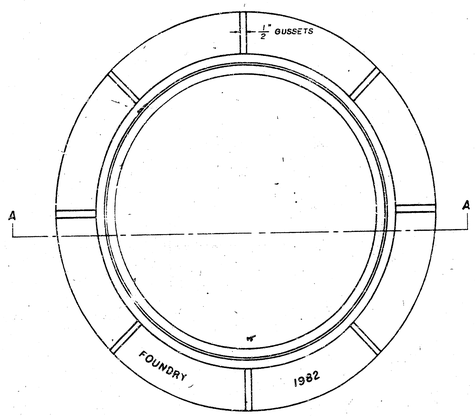

TOP VIEW

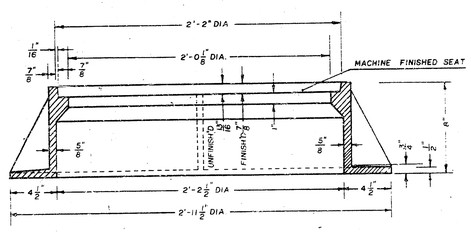

SECTION A-A

GENERAL NOTES

1. MANHOLE CASTINGS SHALL BE MANUFACTURED USING GOOD QUALITY GRAY IRON CONFORMING TO CLASS 30 OF A.S.T.M. DESIGNATION A-48. DIMENSIONS AND WEIGHTS SHOWN ON THE DETAILED DRAWINGS SHALL BE CONSIDERED AS MINIMUM REQUIREMENTS AND ANY DEVIATIONS FROM THE DIMENSIONS SHOWN MUST BE SPECIFICALLY APPROVED. THE FINISHED CASTINGS SHALL BE OF UNIFORM QUALITY, FREE FROM BLOWHOLES, POROSITY, HARD SPOTS, SHRINKAGE DISTORTIONS OR OTHER DEFECTS.

2. MANHOLE CASTINGS SHALL BE COATED WITH AN ASPHALT PAINT RESULTING IN A SMOOTH, TOUGH AND TENACIOUS COATING WHICH IS NOT BRITTLE OR TACKY.

3. MANHOLE CASTINGS SHALL BE MANUFACTURED SUCH THAT A COVER MANUFACTURED BY ANY ONE FOUNDRY WILL FIT INTERCHANGEABLY INTO A FRAME MANUFACTURED BY ANOTHER FOUNDRY AND STILL MEET ALLOWABLE CLEARANCES AND NON-ROCKING REQUIREMENTS. THIS WILL REQUIRE MANUFACTURING OF THE MATCHING FACES ON THE COVER AND THE FRAME TO CLOSE TOLERANCES.

4. THE OUTSIDE CIRCUMFERENCE OF THE VERTICAL FACE OF THE COVER AND THE INSIDE CIRCUMFERENCE OF THE VERTICAL FACE IN THE FRAME RECESS SHALL BE MANUFACTURED TO TOLERANCES SUCH THAT THE CLEARANCE BETWEEN THE COVER AND FRAME WILL NOT EXCEED 1/8" AT ANY POINT AROUND THE CIRCUMFERENCE OF THE COVER. THE SEATING SURFACES BETWEEN THE COVER AND FRAME SHALL BE MACHINED SUCH THAT THESE SURFACES SHALL MAKE FULL CONTACT FOR THEIR FULL CIRCUMFERENCE TO PRECLUDE THE COVER FROM ROCKING IN THE FRAME.

5. THE MANHOLE FRAME AND COVER SHALL BE MARKED WITH LETTERING INDICATING THE NAME OF THE MANUFACTURER AND THE YEAR WHEN THE COVER OR FRAME WAS CAST. THE COVER SHALL BE FURTHER IDENTIFIED WITH REGARDS TO OWNERSHIP USING LETTERS AT LEAST 1" IN HEIGHT. THIS IDENTIFICATION SHALL BE "CITY OF WICHITA SEWER DEPARTMENT". THE WORD DEPARTMENT MAY BE ABBREVIATED. THE TEXTURE OF THE TOP SURFACE OF THE COVER SHALL BE MANUFACTURED IN A CHECKERED PATTERN DESIGN AS INDICATED ON THE DRAWINGS. SMOOTH BLOCKOUTS SHALL BE UTILIZED TO HIGHLIGHT THE LETTERING ON THE COVER SURFACE. THE TOTAL AREA OF SMOOTH SURFACE BLOCKOUT SHALL NOT EXCEED THE AREA AS INDICATED ON THE DRAWING. POSITIONING OF SMOOTH BLOCKOUTS AND LETTERING MAY VARY FROM THAT SHOWN ON THE DETAILED DRAWING.

JNL DEC. 1981

C.O.W. Proj No. 403-76-245-82202-000-000-001

18-8-5-5