STORM SEWER PLANS FOR

LEEWOOD VILLAGE AT NORTHROCK

PHASE 2

STORM WATER SEWER #432

PROJECT NO. 468-82199

CITY OF WICHITA, KANSAS

MICHAEL E. LINDEBAK, CITY ENGINEER

INDEX NO. 750448

GENERAL NOTES

1. THE TOPS OF INLETS AND MANHOLES AS NOTED ON THE PLANS MAY VARY SO AS TO MEET PROPOSED TOP OF CURB ELEVATIONS OR PAVEMENT ELEVATIONS. THE FIELD ENGINEER SHALL LOCATE INLETS AND MANHOLES WITH REFERENCE TO PROPOSED PAVING PLANS OF THE PERTINENT STREETS.

2. ALL CONCRETE SHALL BE STANDARD PAVING MIX UNLESS OTHERWISE NOTED.

3. THE CONTRACTOR SHALL BE RESPONSIBLE FOR PRESERVING PROPERTY IRONS. THE CONTRACTOR SHALL BE REQUIRED TO RE-ESTABLISH ANY PROPERTY IRONS WHICH ARE DAMAGED OR DESTROYED BY HIS CONSTRUCTION OPERATIONS. SUCH IRONS SHALL BE RE-ESTABLISHED BY A LICENSED LAND SURVEYOR IN ACCORDANCE WITH STATE LAWS.

4. TREES TO BE REMOVED ARE MARKED ⟨⟩. ALL TREES WHICH IN THE OPINION OF THE FIELD ENGINEER CAN BE SAVED, SHALL BE SAVED.

5. CONTRACTOR SHALL NOTIFY UTILITY COMPANIES OF CONSTRUCTION SCHEDULING.

6. EXISTING UTILITIES AND THEIR LOCATIONS, AS SHOWN ON THE PLANS REPRESENT THE BEST INFORMATION OBTAINABLE FOR DESIGN. LOCATION INFORMATION INFORMATION HAS BEEN OBTAINED FROM THE VARIOUS COMPANIES AND IS EITHER FROM COMPANY UTILITY DRAWINGS OR COMPANY PROVIDED FIELD LOCATIONS. THE PLAN LOCATIONS SHOWN ARE NOT GUARANTEED. ADDITIONAL EXISTING UTILITIES MAY ALSO BE ENCOUNTERED.

7. CONTRACTOR WILL BE REQUIRED TO PROVIDE A MINIMUM ADVANCE NOTICE OF FORTY-EIGHT (48) HOURS TO UTILITY COMPANIES PRIOR TO STARTING ANY EXCAVATION AS FOLLOWS:

KANSAS ONE-CALL	1-800-344-7233
	OR 687-2470 (LOCAL WICHITA)

THE CONTRACTOR MUST NOTIFY THE FOLLOWING IN CASE OF AN EMERGENCY:

SOUTHWESTERN BELL TELEPHONE COMPANY	1-571-2115
CABLEVISION	262-0661
KG&E (GAS)	832-3169 OR 3180
KANSAS GAS & ELECTRIC	264-1141
CITY OF WICHITA WATER & SEWER DEPT.	268-4908

8. RUBBLE FROM THE REMOVAL OF MISCELLANEOUS STRUCTURES AND EXCESS EXCAVATION WHICH IS TO BE WASTED SHALL BE DISPOSED OF ON SITES TO BE PROVIDED BY THE CONTRACTOR. THESE SITES SHALL BE APPROVED BY THE ENGINEER AS TO SUITABILITY, APPEARANCE AND SITE LOCATION. LOCATIONS THAT, IN THE OPINION OF THE ENGINEER, WILL LEAVE AN UNSIGHTLY APPEARANCE WILL NOT BE APPROVED. ALL DISPOSAL SITES MUST BE APPROVED BY THE KANSAS DEPARTMENT OF HEALTH AND ENVIRONMENT. MATERIAL EITHER STOCKPILED OR DISPOSED OF IN A FLOOD PLAIN WOULD REQUIRE A KANSAS STATE BOARD OF AGRICULTURE PERMIT. ANY MATERIAL DUMPED IN WATERS OF THE UNITED STATES OR WETLANDS IS SUBJECT TO U.S. CORPS OF ENGINEERS PERMITTING REGULATIONS. ANY MATERIAL BURIED OR STOCKPILED BEYOND APPROVED CONSTRUCTION LIMITS WOULD REQUIRE ADDITIONAL ARCHAEOLOGICAL INVESTIGATIONS UNLESS BURIED IN A PREVIOUSLY APPROVED BORROW LOCATION.

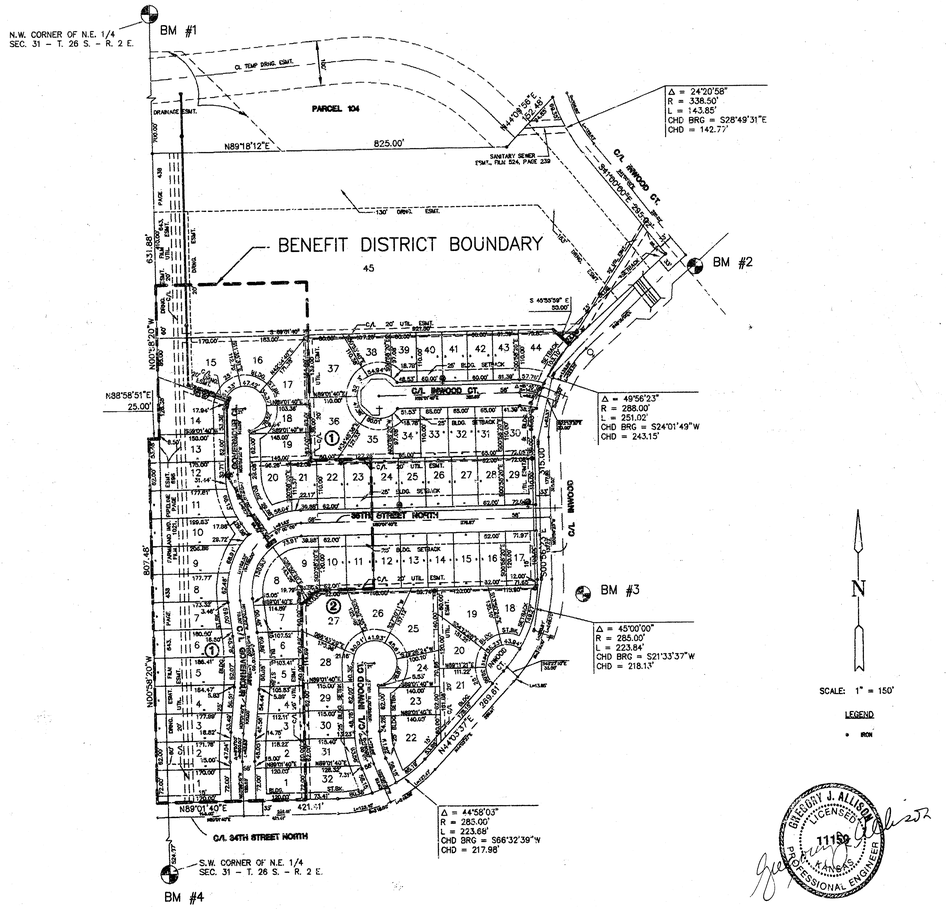

INDEX TO DRAWINGS

SHEET NO.	DESCRIPTION
1	TITLE SHEET
2-3	LINE 1
4	INLET DETAIL
5	MANHOLE DETAIL
6-7	FINAL PLATS

BENCHMARKS

BM #1 CITY DISC 30' N. & 34' W. OF 1/4 COR. 37TH ST. N. & GOVERNOUR.
ELEV. = 185.54

BM #2 "□" CUT ON T.C. AT WEST END OF N.W. RETURN 36TH ST. N. & INWOOD.
ELEV. = 183.53

BM #3 TOP OF "T" POST 2' E. OF S.W.COR. LOT 1,BLK.1 KILLARNEY PLAZA 2ND
ELEV. = 192.00

BM #4 CONC. NAIL DRIVEN ON N. EDGE OF MH 72' E. OF CTR. SECTION 31-T26S-2E
ELEV. = 194.16

Booked 12-22-93 mcg

GREGORY J. ALLISON LICENSED 11152 KANSAS PROFESSIONAL ENGINEER

LEEWOOD VILLAGE AT NORTHROCK

STORM SEWER PLANS PHASE 2

Design	G.J.A.
Drawn by	K.K.L.
Checked by	J.N.J
Date	9/93
Job no.	92175WST
Sheet	1
Of	7

MID-KANSAS ENGINEERING CONSULTANTS INC.
3500 NORTH ROCK ROAD
BUILDING #300
WICHITA, KANSAS 67226 (316) 636-5566

92-17-113-D

LEEWOOD VILLAGE PHASE 2
STORM SEWER PLANS
PROJ. NO. 468-82199

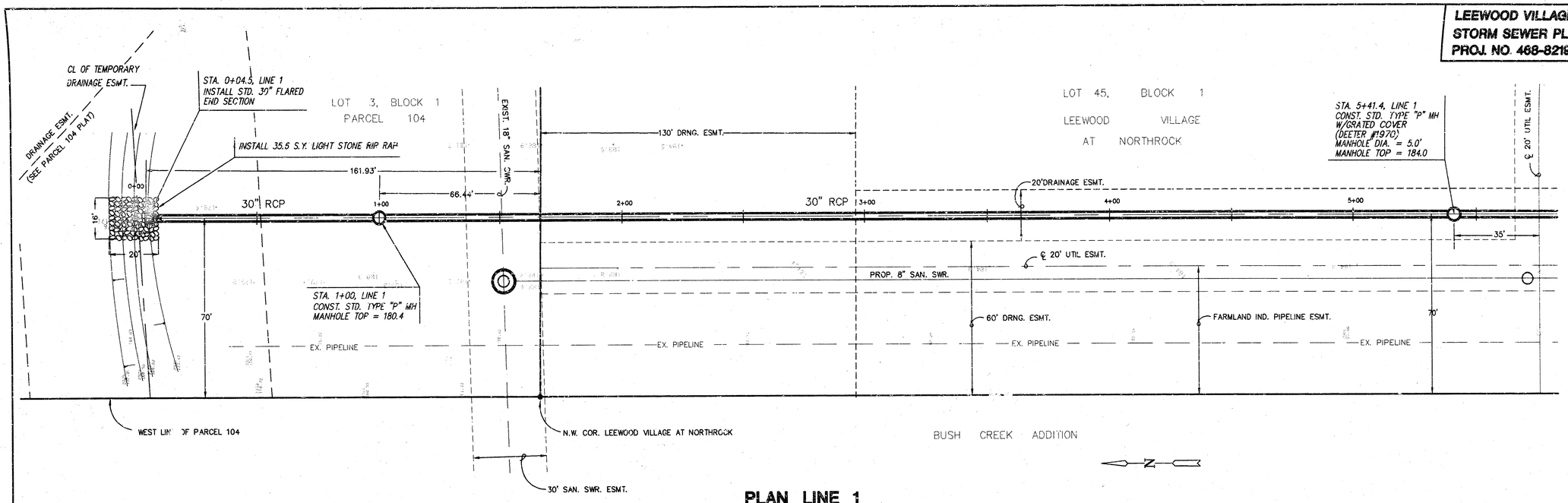

PLAN LINE 1

SCALE: 1"=20'

PROFILE LINE 1

SCALE: HORIZ. 1"=20'
SCALE: VERT. 1"=5'

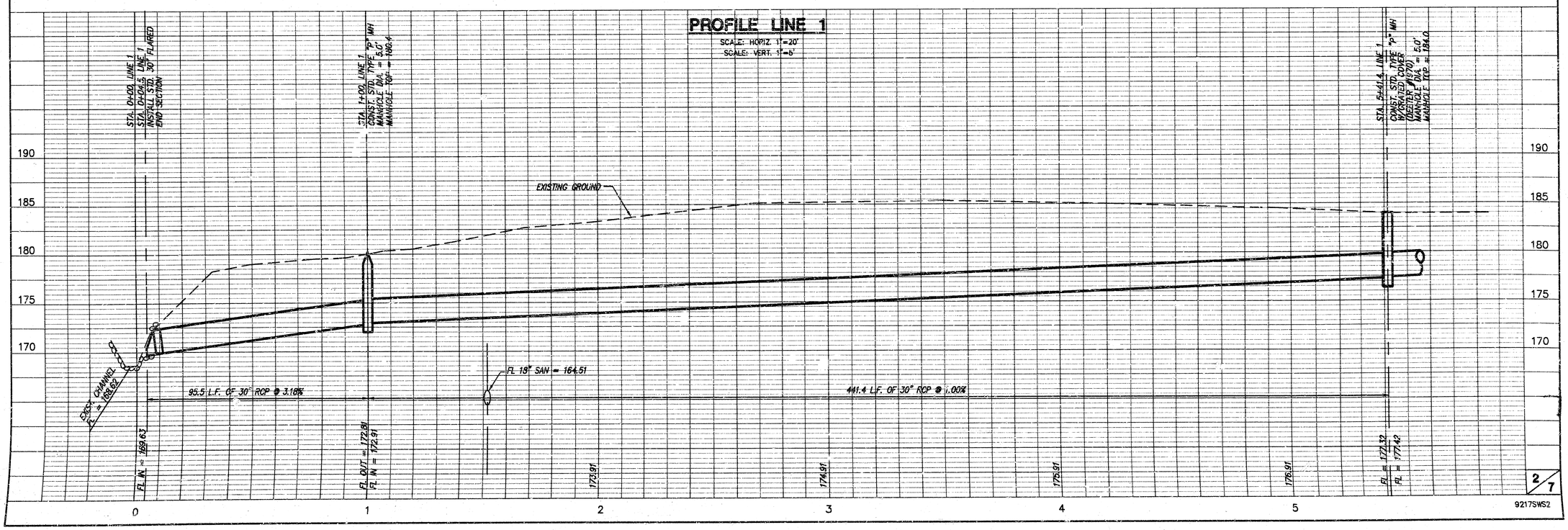

9217SWS2

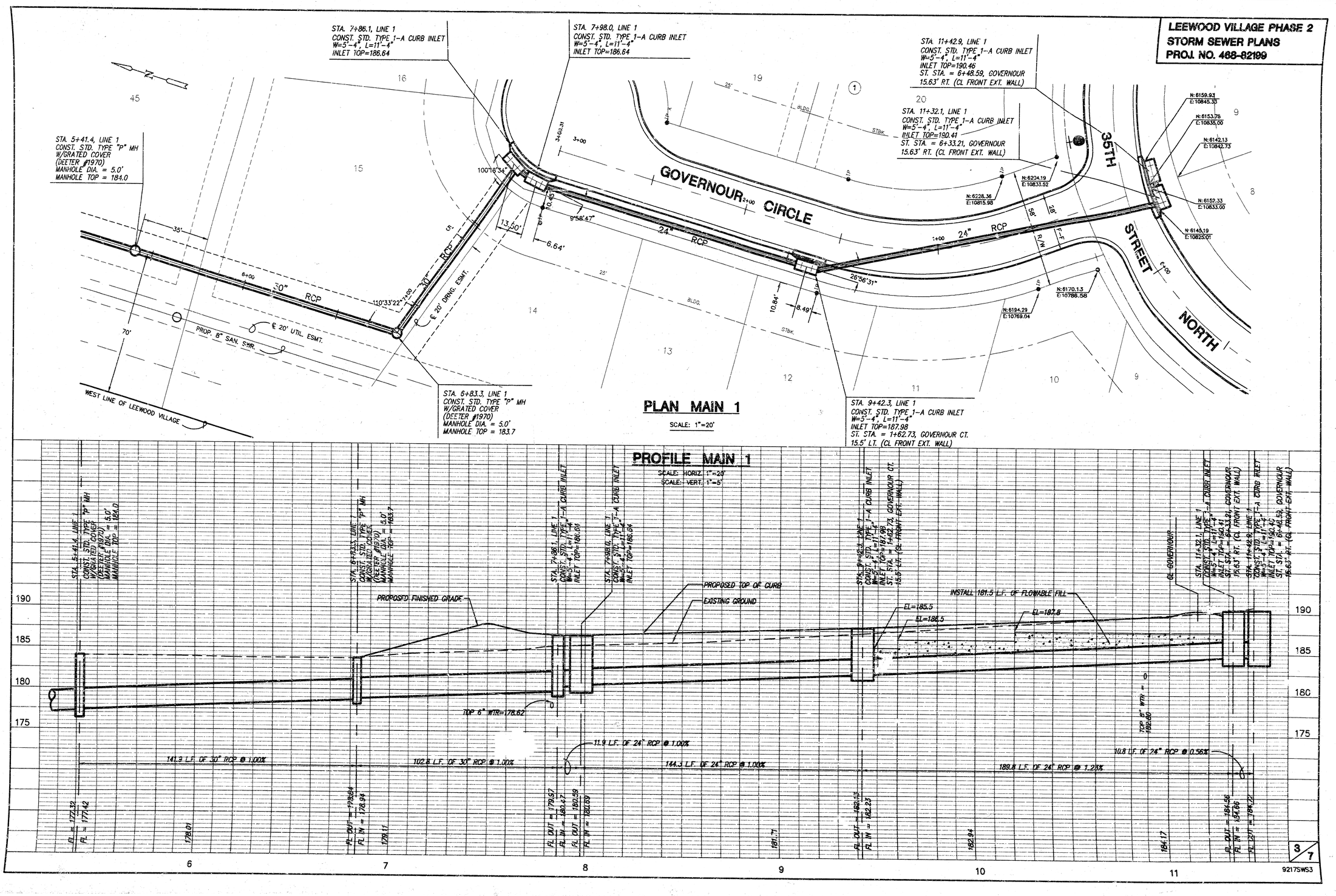
LEEWOOD VILLAGE PHASE 2
STORM SEWER PLANS
PROJ. NO. 468-82199
STA. 7+86.1, LINE 1
CONST. STD. TYPE 1-A CURB INLET
W=5'-4", L=11'-4"
INLET TOP=186.64
STA. 7+98.0, LINE 1
CONST. STD. TYPE 1-A CURB INLET
W=5'-4", L=11'-4"
INLET TOP=186.64
STA. 11+42.9, LINE 1
CONST. STD. TYPE 1-A CURB INLET
W=5'-4", L=11'-4"
INLET TOP=190.46
ST. STA. = 6+48.59, GOVERNOUR
15.63' RT. (CL FRONT EXT. WALL)
STA. 11+32.1, LINE 1
CONST. STD. TYPE 1-A CURB INLET
W=5'-4", L=11'-4"
INLET TOP=190.41
ST. STA. = 6+33.21, GOVERNOUR
15.63' RT. (CL FRONT EXT. WALL)
STA. 5+41.4, LINE 1
CONST. STD. TYPE "P" MH
W/GRATED COVER
(DEETER #1970)
MANHOLE DIA. = 5.0'
MANHOLE TOP = 184.0
GOVERNOUR CIRCLE
35TH STREET NORTH
24" RCP
30" RCP
PROP. 8" SAN. SWR.
℄ 20' UTIL. ESMT.
℄ 20' DRNG. ESMT.
WEST LINE OF LEEWOOD VILLAGE
STA. 6+83.3, LINE 1
CONST. STD. TYPE "P" MH
W/GRATED COVER
(DEETER #1970)
MANHOLE DIA. = 5.0'
MANHOLE TOP = 183.7
STA. 9+42.3, LINE 1
CONST. STD. TYPE 1-A CURB INLET
W=5'-4", L=11'-4"
INLET TOP=187.98
ST. STA. = 1+62.73, GOVERNOUR CT.
15.5' LT. (CL FRONT EXT. WALL)
PLAN MAIN 1
SCALE: 1"=20'
PROFILE MAIN 1
SCALE: HORIZ. 1"=20'
SCALE: VERT. 1"=5'
PROPOSED FINISHED GRADE
PROPOSED TOP OF CURB
EXISTING GROUND
INSTALL 181.5 L.F. OF FLOWABLE FILL
EL=185.5
EL=186.5
EL=187.8
TOP 6" WTR=178.62
11.9 L.F. OF 24" RCP @ 1.00%
141.3 L.F. OF 30" RCP @ 1.00%
102.8 L.F. OF 30" RCP @ 1.00%
144.3 L.F. OF 24" RCP @ 1.00%
189.8 L.F. OF 24" RCP @ 1.23%
10.8 L.F. OF 24" RCP @ 0.56%
190
185
180
175
6
7
8
9
10
11
3/7
9217SWS3

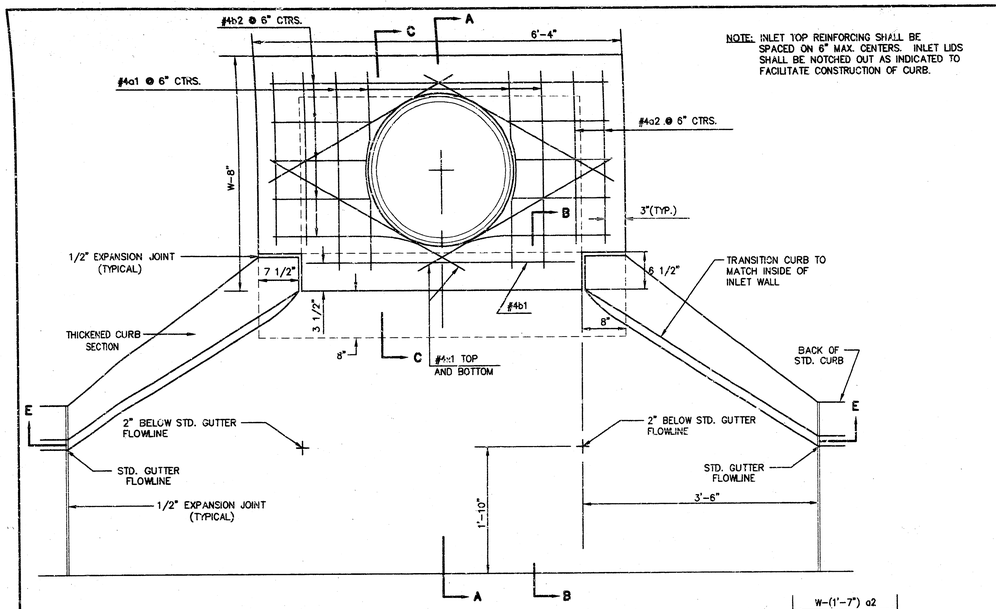

NOTE: INLET TOP REINFORCING SHALL BE SPACED ON 6" MAX. CENTERS. INLET LIDS SHALL BE NOTCHED OUT AS INDICATED TO FACILITATE CONSTRUCTION OF CURB.

PLAN

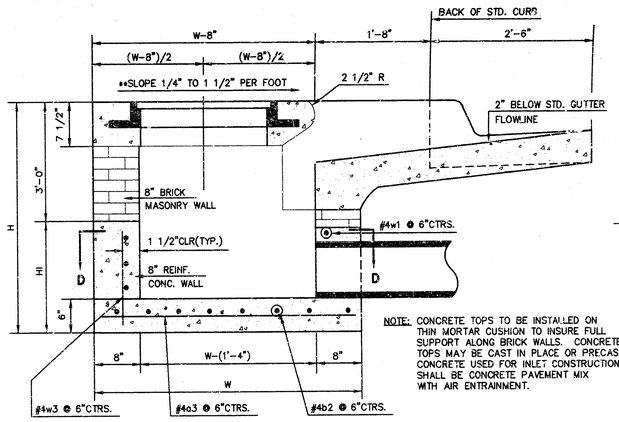

NOTE: CONCRETE TOPS TO BE INSTALLED ON THIN MORTAR CUSHION TO INSURE FULL SUPPORT ALONG BRICK WALLS. CONCRETE TOPS MAY BE CAST IN PLACE OR PRECAST. CONCRETE USED FOR INLET CONSTRUCTION SHALL BE CONCRETE PAVEMENT MIX WITH AIR ENTRAINMENT.

SECTION A-A

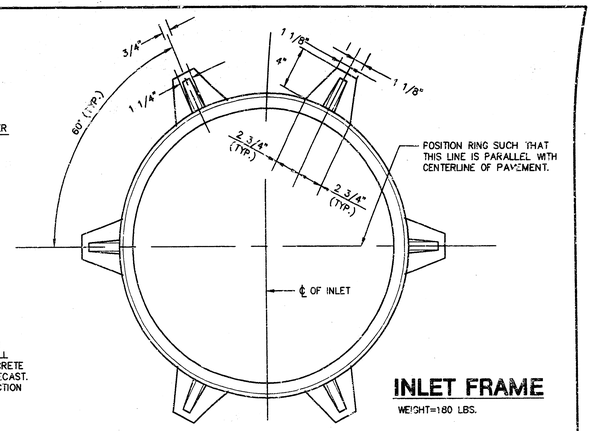

INLET FRAME

WEIGHT=180 LBS.

NOTE: CONTRACTOR SHALL HAVE THE OPTION OF CONSTRUCTING 8" BRICK MASONRY WALLS BETWEEN THE CONCRETE INLET BASE AND TOP ON THIS INLET WHEN W=6'-4" AND H=7'-0" OR LESS.

ADDITIONAL CURB AND GUTTER CONSTRUCTION NECESSARY TO CONNECT SET-BACK INLET TO PAVEMENT WILL BE PAID FOR AT THE UNIT PRICE BID FOR EACH INLET HOOKUP.

INLET INVERT SHALL BE SHAPED WITH 8 SACK SAND MIX CONCRETE TO CREATE FLOW CHANNELS AND TO INCREASE HYDRAULIC EFFICIENCY SUCH THAT THE INLET WILL BE SELF CLEANING BETWEEN ALL INLET AND/OR OUTLET PIPES.

THE ENDS OF ALL PIPES INSTALLED IN INLETS SHALL BE CUT OFF FLUSH WITH THE INSIDE FACE OF THE INLET WALL.

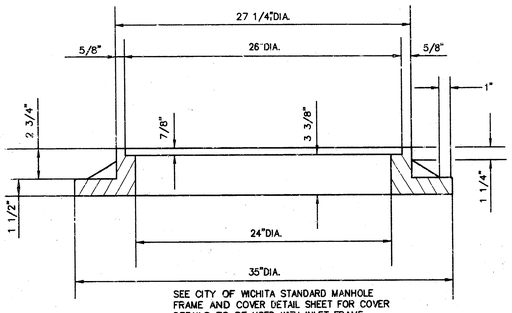

SEE CITY OF WICHITA STANDARD MANHOLE FRAME AND COVER DETAIL SHEET FOR COVER DETAILS TO BE USED WITH INLET FRAME.

PRECAST SLAB AND FLOOR REINFORCING

		W=4'-4"		W=5'-4"		W=6'-4"		W=7'-4"		W=8'-4"	
MARK	SIZE	NO.	LENGTH	NO.	LENGTH	NO.	LENGTH	NO.	LENGTH	NO.	LENGTH
*a1	#4	6	6'-7"	6	8'-7"	6	10'-7"	6	12'-7"	6	14'-7"
a2	#4	4	6'-0"	4	8'-0"	4	10'-0"	4	12'-0"	4	14'-0"
a3	#4	13	4'-1"	13	5'-1"	13	6'-1"	13	7'-1"	13	8'-1"
b1	#4	1	4'-9"	1	4'-9"	1	4'-9"	1	4'-9"	1	4'-9"
*b2	#4	23	6'-1"	29	6'-1"	35	6'-1"	41	6'-1"	47	6'-1"
1	#4	8	3'-10"	8	4'-2"	8	4'-6"	8	4'-10"	8	5'-2"

WALL REINFORCING

		W=4'-4"		W=5'-4"		W=6'-4"		W=7'-4"		W=8'-4"	
MARK	SIZE	NO.	LENGTH	NO.	LENGTH	NO.	LENGTH	NO.	LENGTH	NO.	LENGTH
w1	#4	①	6'-1"	①	6'-1"	①	6'-1"	①	6'-1"	①	6'-1"
w2	#4	①	4'-1"	①	5'-1"	①	6'-1"	①	7'-1"	①	8'-1"
w3	#4	32	②	36	②	40	②	44	②	48	②

* FIELD BEND OR CUT REINFORCING AS REQUIRED FOR CLEARANCE
① 4(HI-12"); (HI-12") ROUNDED DOWN TO NEAREST 0.5'
② HI-3"

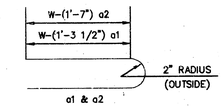

BENDING DIAGRAM

STANDARD CURB INLET PRECAST TOPS			
W	PRE-CAST TOP SIZE	PIPE SIZE	CU. YD. CONC.
4'-4"	3'-0"x6'-4"x7 1/2"	21" & SMALLER	0.38±
5'-4"	4'-8"x6'-4"x7 1/2"	24" & 30"	.51±
6'-4"	5'-8"x6'-4"x7 1/2"	36" & 42"	.64±
7'-4"	6'-8"x6'-4"x7 1/2"	48" & 54"	.77±
8'-4"	7'-8"x6'-4"x7 1/2"	60" & 66"	.90±

**NOTE: SLOPE OF INLET TOPS TO MATCH SIDEWALK OR PARKING SLOPES WITHIN LIMITS INDICATED.

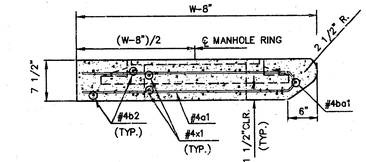

SECTION C-C

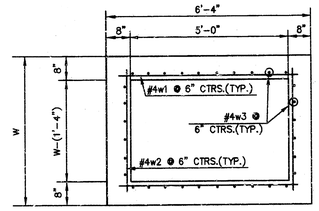

SECTION D-D

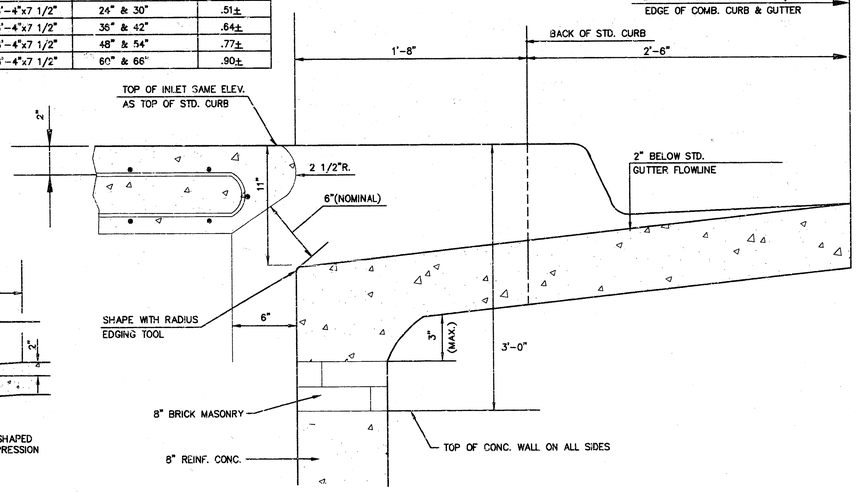

SECTION B-B

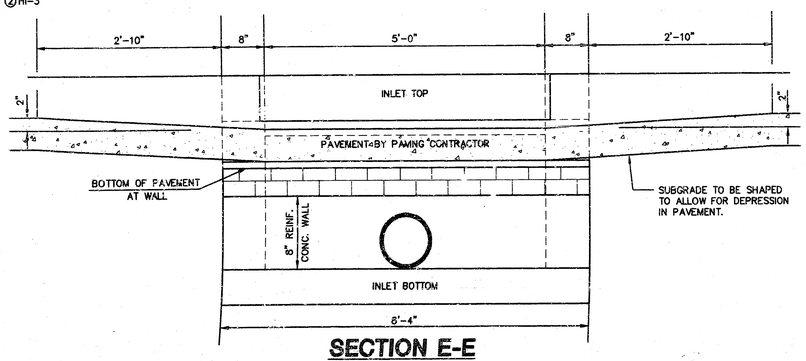

SECTION E-E

REVISED: 12-16-89 C.O.W.

STANDARD TYPE 1A CURB INLET

INLET OPENING=5"x10'-0"

JUNE 1984

CITY OF WICHITA, KANSAS

Design C.O.W.	Checked by	Checked by	
Drawn by	Date	Date	Sht. No. 4 OF 7

5X10-1A

SEWER APPURTENANCES DETAILS

ADOPTED AS STANDARD DESIGN BY CITY OF WICHITA

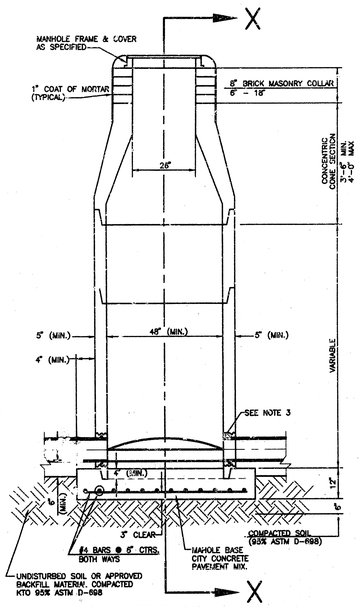

TYPE P
STANDARD MANHOLE

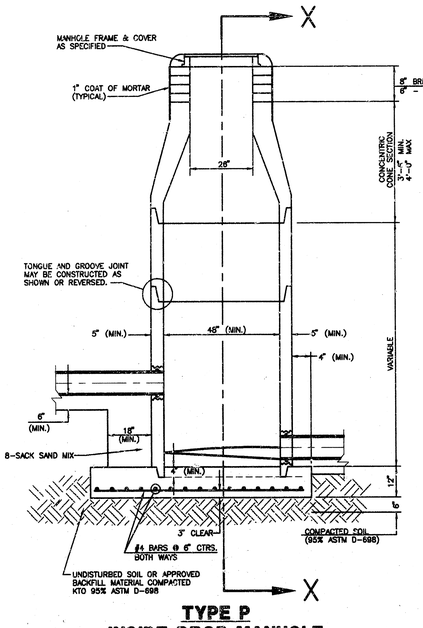

TYPE P
INSIDE DROP MANHOLE

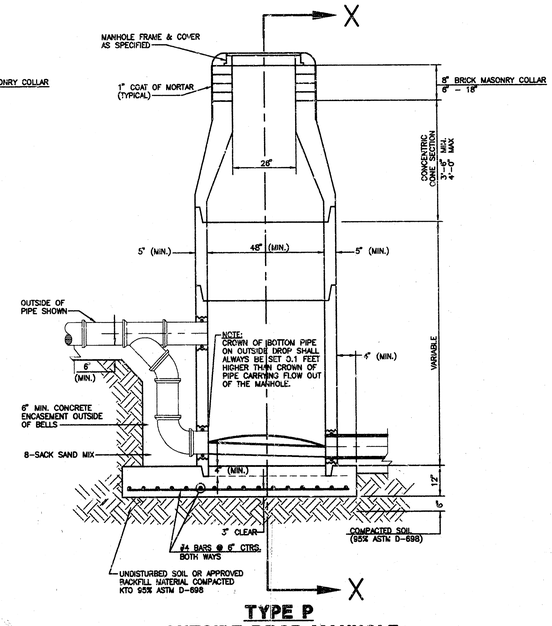

TYPE P
OUTSIDE DROP MANHOLE

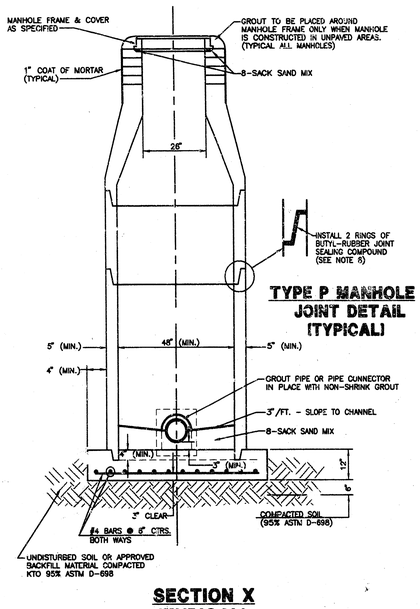

TYPE P MANHOLE
JOINT DETAIL
(TYPICAL)

SECTION X
(TYPICAL)

GENERAL NOTES

1. ALL PRECAST CONCRETE MANHOLE SECTIONS SHALL CONFORM TO THE LATEST REVISIONS OF A.S.T.M. C478 AS MODIFIED BY THE SPECIFICATIONS.
2. NON-SHRINK GROUT SHALL BE NON-METALLIC TYPE.
3. APPROVED FLEXIBLE WATERSTOP GASKETS SHALL BE INSTALLED TO JOIN THE SEWER TO THE MANHOLE WALL WHEN A.B.S. COMPOSITE PIPE OR P.V.C. PIPE IS USED. FOR OTHER TYPES OF PIPE THE SEWER SHALL BE GROUTED IN PLACE WITH NON-SHRINK GROUT. THE SEWER PIPE SHALL BE SUPPORTED WITH CONCRETE ENCASEMENT A MINIMUM OF 3 FEET FROM THE MANHOLE WALL AND TO THE FIRST JOINT FOR V.C.P. SUCH THAT THE JOINT REMAINS FLEXIBLE.
4. ALL INSIDE SURFACES OF THE CONCRETE MANHOLE WHICH WOULD BE EXPOSED TO SEWER GAS SHALL BE COATED WITH 2 COATS TNEMEC SERIES 66 HI-BUILD EPOXOLINE, DRY THICKNESS OF 8 MILS (MIN.)
5. EXTERIOR MANHOLE WALLS SHALL BE COATED WITH 1 COAT MOBILARMA 633 BITUMINUS COATING.
6. JOINT SEALING COMPOUND SHALL BE KENT SEAL NO. 2 OR APPROVED EQUAL.
7. PRECAST MANHOLES SHALL BE SET AT LEAST 4 INCHES INTO THE MANHOLE BASE.
8. TOP OF MANHOLE FLOOR SLAB SHALL BE AT LEAST 3 INCHES BELOW THE FLOW LINE OF THE OUTLET PIPE TO INSURE SUFFICIENT MINIMUM THICKNESS OF SHAPED INVERT.
9. LIFTING HOLES SHALL BE FILLED WITH NON-SHRINK GROUT AND THE INTERIOR SURFACE COATED AS SPECIFIED.
10. MORTAR USED IN MASONRY CONSTRUCTION SHALL CONTAIN 8 SACKS OF CEMENT PER CUBIC YARD. CONCRETE USED IN MANHOLE BASES SHALL CONFORM TO THE REQUIREMENTS OF CONCRETE FOR CONCRETE PAVEMENT CONSTRUCTION AS SPECIFIED IN THE CITY STANDARD PAVING SPECIFICATIONS USING CITY CONCRETE PAVEMENT MIX WITHOUT AIR ENTERING ADMIXTURE. MORTAR SHALL BE PLACED AROUND THE MANHOLE RING AS SHOWN ON THE DRAWINGS WHEN MANHOLES ARE CONSTRUCTED IN UNPAVED AREAS. MANHOLES CONSTRUCTED WHERE PIPE SIZES ARE SMALLER THAN 24" SHALL HAVE AN INSIDE DIAMETER OF 4'. MANHOLES CONSTRUCTED WHERE PIPE SIZES ARE 24" OR LARGER SHALL HAVE AN INSIDE DIAMETER OF 5'. COMPLETED MANHOLE SHALL BE WITHOUT LEAKS AND WATER TIGHT.

PRECAST MANHOLE NOTES

11. REINFORCING STEEL SHALL BE INSTALLED IN THE MANHOLE BASES AND SHALL CONSIST OF NO. 4 BARS PLACED ON 6" CENTERS IN BOTH DIRECTIONS. THE MANHOLE BASE REINFORCEMENT SHALL BE PLACED AT LEAST 3" ABOVE THE BOTTOM OF THE MANHOLE BASE. ALL COSTS FOR FURNISHING AND INSTALLING REINFORCING STEEL SHALL BE INCLUDED IN THE UNIT PRICE BID FOR THE MANHOLE.
12. OPENINGS SHALL BE CUT INTO THE MANHOLE WALL WHEN OUTSIDE DROPS ARE CONSTRUCTED ON EXISTING MANHOLES. SUCH OPENINGS CUT INTO EXISTING MANHOLES SHALL BE AS SMALL AS PRACTICAL TO FACILITATE INSTALLING AND GROUTING THE NEW PIPE IN PLACE. WATERSTOP GASKETS SHALL BE USED WITH P.V.C. AND A.B.S. COMPOSITE PIPE. THE NEW PIPE SHALL BE GROUTED INTO THE OPENING USING AN APPROVED NONSHRINK GROUT FOR THE FULL MANHOLE WALL THICKNESS. THE EXTERIOR OF THE COMPLETED CONNECTION SHALL BE SEALED WITH AN APPROVED BITUMINOUS COATING SUCH THAT THE CONNECTION WILL BE WATER TIGHT. FLOOR OF MANHOLE SHALL BE MODIFIED TO FORM NEW FLOW CHANNEL FOR THE NEW CONNECTION AS INDICATED BY THE DRAWING. THIS WORK, INCLUDING MODIFICATION OF MANHOLE FLOOR, SHALL BE PAID FOR AT THE UNIT PRICE BID FOR OUTSIDE DROP STACK CONSTRUCTED ON EXISTING MANHOLE.
13. THE FLOORS OF ALL MANHOLES SHALL BE SHAPED WITH FLOW CHANNELS SUCH THAT THE MANHOLES WILL BE SELF CLEANING AND FREE OF AREAS WHERE SOLIDS COULD BE DEPOSITED AS SEWAGE FLOWS THROUGH THE MANHOLE FROM ALL INLET PIPES TO THE OUTLET PIPE. FLOW CHANNELS SHALL BE FORMED TO MATCH THE BOTTOM HALVES OF THE INFLOWING PIPES AND THE OUTFLOWING PIPE AS SHOWN BY THE DRAWINGS EXCEPT FOR INSIDE DROP MANHOLES. FLOW CHANNELS FOR INSIDE DROP MANHOLES SHALL BE CONSTRUCTED AS INDICATED BY THE DRAWING. MANHOLE FLOORS SHALL HAVE SLOPES OF 3 INCHES PER FOOT IN THE AREAS OUTSIDE OF THE FLOW CHANNELS SLOPED TOWARD THE FLOW CHANNELS. PIPES LAID THROUGH MANHOLES SHALL HAVE THE TOP HALF REMOVED TO NEAT LINES FOR THE FULL INSIDE DIAMETER OF THE MANHOLE. MANHOLE FLOORS SHALL THEN BE SHAPED AROUND THE BOTTOM HALF OF THE PIPE WHICH FORMS THE FLOW CHANNEL.
14. PIPES INSTALLED WITHIN THE EXCAVATION MADE FOR THE MANHOLE SHALL BE CRADLED WITH CONCRETE TO THE LIMITS OF THE MANHOLE EXCAVATION. WHEN CLAY PIPE IS USED, THE CRADLE SHALL EXTEND TO THE FIRST JOINT OUTSIDE THE MANHOLE. THE CRADLE SHALL BE TERMINATED AT THE CLAY PIPE JOINT IN A MANNER WHICH WILL MAINTAIN THE FLEXIBILITY OF THE JOINT. COST OF CRADLE WITHIN MANHOLE EXCAVATION OR TO CLAY PIPE JOINTS ADJACENT TO MANHOLE SHALL BE INCLUDED IN THE UNIT PRICE BID FOR THE MANHOLE.
15. MANHOLE COVER CASTINGS AND MANHOLE FRAME CASTINGS SHALL CONFORM TO THE REQUIREMENTS AS INDICATED IN THE STANDARD SPECIFICATIONS AND AS SHOWN IN THE STANDARD DETAIL DRAWING.
16. THE VERTICAL DROP IN INSIDE DROP MANHOLES SHALL NOT EXCEED 4' FOR INFLOWING PIPES SIZED 12" OR SMALLER AND 2' FOR INFLOWING PIPES LARGER THAN 12". THE CROWNS OF INFLOWING PIPES SHALL NEVER BE SET LOWER THAN THE CROWN OF THE OUTFLOWING PIPE.
17. STANDARD MANHOLES AND STANDARD INSIDE DROP MANHOLES SHALL BE BID AS STANDARD MANHOLES FOR THE TYPE AND DIAMETER INDICATED. OUTSIDE DROP MANHOLES SHALL BE BID AS STANDARD OUTSIDE DROP MANHOLES FOR THE TYPE AND DIAMETER INDICATED. ALL MANHOLE DIAMETERS WILL BE 4' UNLESS INDICATED OTHERWISE.
18. A BRICK MASONRY COLLAR SHALL BE INSTALLED BETWEEN THE CAST IRON FRAME AND THE CONCENTRIC CONE. THE COLLAR WILL HAVE 8" WALLS AND A VERTICAL HEIGHT OF 6" MINIMUM AND 18" MAXIMUM. A 1" COAT OF MORTAR WILL BE PLASTERED ON THE OUTSIDE OF THE COLLAR.

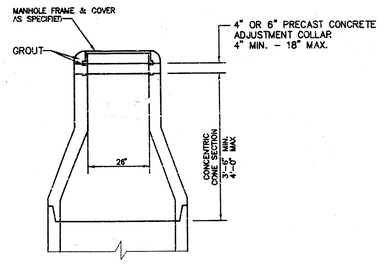

ALTERNATE CONSTRUCTION
IN UNPAVED AREAS

LEEWOOD VILLAGE AT NORTHROCK	Design GA
MANHOLE DETAILS	Drawn by AM
	Checked by GA
	Date 6/92
	Job no. MHDTLS

MID-KANSAS ENGINEERING CONSULTANTS INC.
3500 NORTH ROCK ROAD
BUILDING #800
WICHITA, KANSAS 67226
(316) 636-5566

Sheet 5 of 7

FINAL PLAT OF

PARCEL NO. 104

AN ADDITION TO WICHITA, SEDGWICK COUNTY, KANSAS

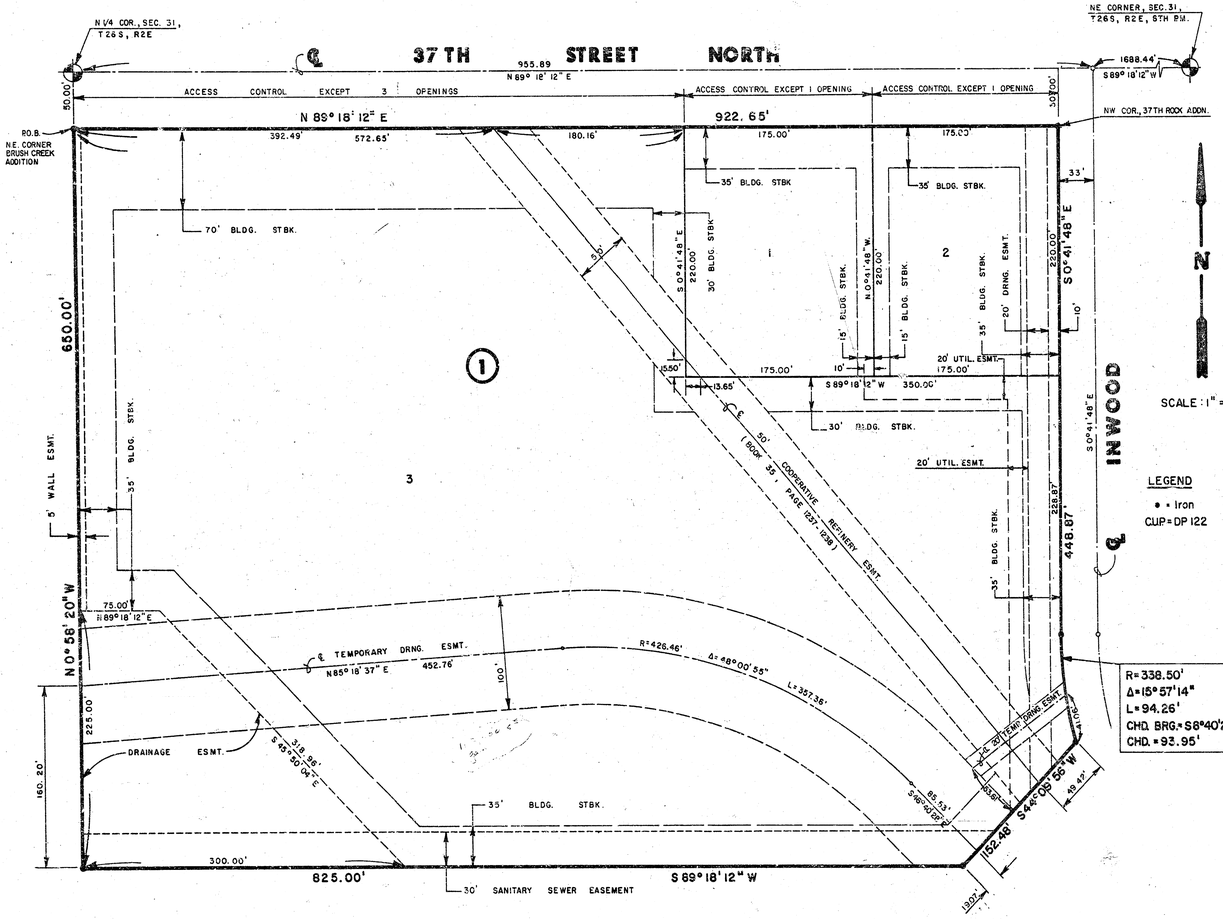

LEGEND

• = Iron

CUP=DP 122

I, Kenneth H. Bengtson, a Civil Engineer and Registered Land Surveyor in Kansas, do hereby certify that I have been in responsible charge of surveying and platting of "PARCEL NO. 104", an addition to Wichita, Sedgwick County, Kansas, into Lots and a Block, the same being accurately set forth in the accompanying plat and described as follows:

A tract of land lying in the Northeast Quarter, Section 31, Township 26 South, Range 2 East of the 6th P.M., Sedgwick County, Kansas, more particularly described as follows:

Beginning at a point lying on the West line and 50.00 feet from the Northwest corner of said Northeast Quarter; thence N 89° 18' 12" E, 922.65 feet parallel with the North line of said Northeast Quarter to the Northwest corner of 37th ROCK ADDITION, an addition to Wichita, Sedgwick County, Kansas; thence Southerly along the West line of said 37TH ROCK ADDITION, S 00° 41' 48" E, 448.87 feet to a point on a curve to the left; thence along said curve 94.26 feet, said curve having a central angle of 15° 57' 14", a radius of 338.50 feet, and a long chord of 93.95 feet, bearing S 08° 40' 25" E; thence S 44° 09' 56" W, 152.48 feet; thence S 89° 18' 12" W, 825.00 feet to a point on the West line of said Northeast Quarter; thence N 00° 58' 20" W, 650.00 feet to the point of beginning.

All easements within the above described property are being vacated and replatted by virtue of K.S.A. 12-512(b).

I hereby certify that the details of this plat are correct to the best of my knowledge and belief this 17th day of February, 1988.

Kenneth H. Bengtson, P.E., RLS #922
Mid-Kansas Engineering Consultants, P.A.
3500 N. Rock Road, Building #800
Wichita, KS 67226

KENNETH H. BENGTSON LICENSED 7238 KANSAS PROFESSIONAL ENGINEER

KENNETH H. BENGTSON REGISTERED LS-922 KANSAS LAND SURVEYOR

Know all men by these presents that we the undersigned property owners of the land as above set forth in the Land Surveyors Certificate, have caused the same to be surveyed and platted into Lots, and a Block the same to be known as "PARCEL NO. 104" an addition to Wichita, Sedgwick County, Kansas. Easements for the construction and maintenance of public utilities and drainage as indicated on the accompanying plat, are hereby granted. The 5.00 foot wall easement is for the purpose of construction and maintenance of a private wall. The 100.00 foot and 20.00 foot temporary drainage easements shall be retained until such time as the drainage channel has been relocated and shall automatically be vacated herewith. All abutters rights of access to or from the South line of 37th Street North over and across the North line of PARCEL NO. 104 are hereby granted to the City of Wichita, provided however that Lot 3, Block 1, shall have access to 37th Street North at three locations and Lots 1 and 2, Block 1, shall have access to 37th Street North at one location each. All access locations shall be determined by the City Engineer.

NORTHROCK REALTY PARTNERS,
a Kansas general partnership

936244

By: Virginia L. Abich
Virginia L. Abich
Killarney Investments, Inc.
managing partner

STATE OF KANSAS
SS:
SEDGWICK COUNTY

Be it remembered that on this 17th day of February, 1988, before me a Notary Public in and for said State and County, came Virginia L. Abich of Killarney Investments, Inc., to me personally known to be the same person who executed the foregoing instrument of writing and duly acknowledged the execution of the same. In testimony whereof I have hereunto set my hand and affixed my notarial seal the day and year above written.

Annette L. Weakley, Notary Public

My Appointment Expires: Aug 10, 1991

ANNETTE L. WEAKLEY NOTARY PUBLIC STATE OF KANSAS My Appt. Exp. 8-10-91

This plat of "PARCEL NO. 104" has been submitted to and approved by the Wichita, Sedgwick County Metropolitan Area Planning Commission, Wichita, Kansas.

Dated this 29th day of October, 1987.

WICHITA-SEDGWICK COUNTY METROPOLITAN AREA PLANNING COMMISSION

Elton Parsons, Chairman

Marvin S. Krout, Secretary

This plat approved and all dedications shown hereon, if accepted by the City Council of the City of Wichita, Kansas, this 15th day of MARCH 1988.

Robert G. Knight, Mayor

Dale E. Rea, Deputy City Clerk

Entered on transfer record this 15th day of March, 1988.

Don Wright - Ronald G. Miller, County Clerk

STATE OF KANSAS)
) SS:
SEDGWICK COUNTY)

This is to certify that this instrument was filed for record in the Register of Deeds office this 15th day of MARCH, 1988. AT 9:00 A.M.

Pat Kettler, Register of Deeds

Ed Rea, Deputy

SEDGWICK COUNTY, KANSAS CLERK OF

20.00

D 6-29

1/1

6 OF 7

FINAL PLAT OF

LEEWOOD VILLAGE AT NORTHROCK

AN ADDITION TO WICHITA, SEDGWICK COUNTY, KANSAS

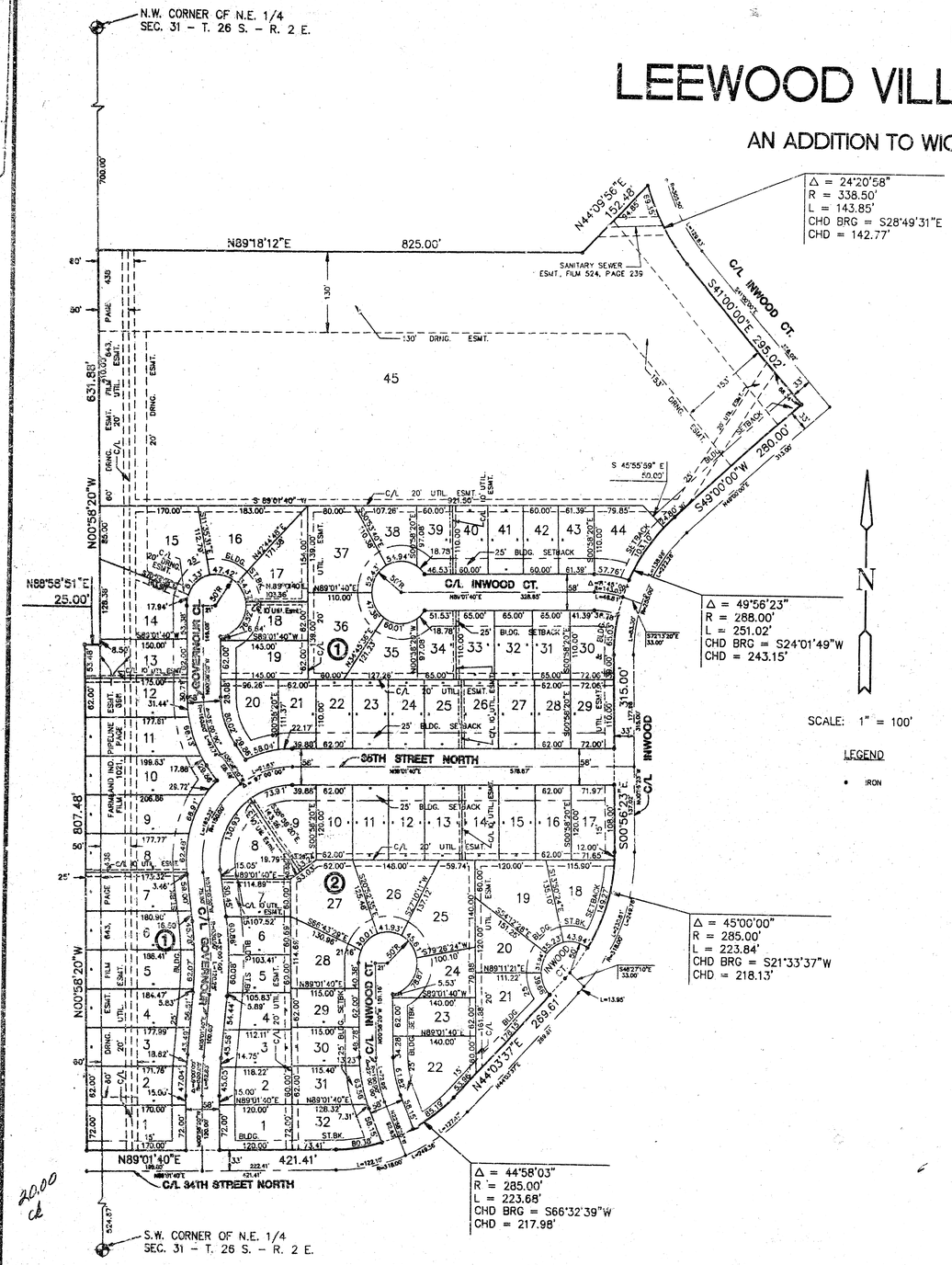

I, Kenneth H. Bengtson, a Civil Engineer and Registered Land Surveyor in Kansas, do hereby certify that I have been in responsible charge of surveying and platting of "LEEWOOD VILLAGE AT NORTHROCK", an addition to Wichita, Sedgwick County, Kansas, into lots, blocks, and streets the same being accurately set forth in the accompanying plat and described herein:

A tract of land lying in the Northeast and Northwest Quarters, Section 31, Township 26 South, Range 2 East of the 6TH P.M., Sedgwick County, Kansas, more particularly described as follows:

Beginning at the Southwest corner of PARCEL NO. 104, an addition to Wichita, Sedgwick County, Kansas; thence N 89° 18' 12" E, 825.00 feet along the South line of said addition; thence N 44° 09' 56" E, 152.48 feet to a point on a curve to the left, said point also being the West line of 37TH ROCK ADDITION, an addition to Wichita, Sedgwick County, Kansas; thence along said curve and said West line, 143.85 feet, said curve having a central angle of 24° 20' 58", a radius of 338.50 feet, and a long chord of 142.77 feet, bearing S 28° 49' 31" E; thence continuing along said West line, S 41° 00' 00" E, 295.02 feet to the intersection of the right of way of Inwood and 36th Street North; thence S 49° 00' 00" W, 280.00 feet along Inwood as platted in KILLARNEY PLAZA SECOND ADDITION, an addition to Wichita, Sedgwick County, Kansas, to a point on a curve to the left; thence along said curve 251.02 feet, said curve having a central angle of 49° 56' 23", a radius of 288.00 feet, and a long chord of 243.15 feet, bearing S 24° 01' 49" W; thence S 00° 56' 23" E, 315.00 feet to a point on a curve to the right; thence along said curve 223.84 feet, said curve having a central angle of 45° 00' 00", a radius of 285.00 feet, and a long chord of 218.13 feet, bearing S 21° 33' 37" W; thence S 44° 03' 37" W, 269.61 feet to a point on a curve to the right; thence along said curve 223.68 feet, said curve having a central angle of 44° 58' 03", a radius of 285.00 feet, and a long chord of 217.98 feet, bearing S 66° 32' 39" W; thence S 89° 01' 40" W, 421.41 feet to a point on the East line of WILLOWOOD, an addition to Wichita, Sedgwick County, Kansas; thence N 00° 58' 20" W, 807.48 feet along said East line to the Northeast corner of said WILLOWOOD; thence N 88° 58' 51" E, 25.00 feet along the extended North line of said WILLOWOOD, to the Southeast corner of the North Half of the Northwest Quarter of said Section 31; thence N 00° 56' 20" W, 631.88 feet along the East line of said Northwest Quarter, to the point of beginning.

The drainage easements recorded on Film 679, Page 774 and Film 954, Page 164 located within the above described property are being vacated by virtue of K.S.A. 12-512(b).

I hereby certify that the details of this plat are correct to the best of by knowledge and belief this 21st day of February, 1992.

Kenneth H. Bengtson, P.E., R.L.S. #922
Mid-Kansas Engineering Consultants, Inc.
3500 N. Rock Road, Building #800
Wichita, KS 67226

KENNETH H. BENGTSON REGISTERED LS-922 KANSAS LAND SURVEYOR

KENNETH H. BENGTSON LICENSED 7238 KANSAS PROFESSIONAL ENGINEER

Know all men by these presents that we the undersigned property owners of the land as above set forth in the Civil Engineer's and Registered Land Surveyor's Certificate, have caused the same to be surveyed and platted into lots, blocks, and streets the same to be known as "LEEWOOD VILLAGE AT NORTHROCK", an addition to Wichita, Sedgwick County, Kansas. The streets are hereby dedicated to and for the use of the public. Easements for the construction and maintenance of drainage and public utilities as indicated on the accompanying plat, are hereby granted.

LEEWOOD HOMES, INC.

BY: Joe H. Lee, President

STATE OF KANSAS)
) ss.
SEDGWICK COUNTY)

BE IT REMEMBERED, that on this 21st day of February, 1992, before me the undersigned, a Notary Public in and for the County and State aforesaid, came Joe H. Lee, President of Leewood Homes, Inc., personally known to me to be the same person who executed the foregoing instrument of writing and duly acknowledged the execution of the same.

IN WITNESS WHEREOF, I have hereunto set my hand and affixed my official seal, the day and year last above written.

Notary Public
VICKY S. BUCKINGHAM
My appointment expires: 10-4-93

VICKY S. BUCKINGHAM Notary Public - State of Kansas My Appt. Expires 10-4-93

SEDGWICK COUNTY KANSAS

#1208575

We, BANK IV WICHITA, N.A., mortgagees on the above described property, do hereby consent to the plat of "LEEWOOD VILLAGE AT NORTHROCK".

BANK IV WICHITA, N.A.

BY: RANDY S. BREHM

STATE OF KANSAS)
) ss.
SEDGWICK COUNTY)

BE IT REMEMBERED, that on this 21st day of February, 1992, before me the undersigned, a Notary Public in and for the County and State aforesaid, came Randy S. Brehm for BANK IV WICHITA, N.A., personally known to me to be the same person who executed the foregoing instrument of writing and duly acknowledged the execution of the same.

IN WITNESS WHEREOF, I have hereunto set my hand and affixed my official seal, the day and year last above written.

Notary Public BARBARA S. BREWER

BARBARA S. BREWER Notary Public - State of Kansas My Appt. Expires

My appointment expires: 1/9/96

This plat of LEEWOOD VILLAGE AT NORTHROCK has been submitted to and approved by the Wichita-Sedgwick County Metropolitan Area Planning Commission, Wichita, Kansas.

Dated this 30th day of January, 1992.

WICHITA-SEDGWICK COUNTY METROPOLITAN AREA PLANNING COMMISSION

Christopher K. Goebel, CHAIRMAN

Marvin S. Krout, SECRETARY

This plat approved and all dedications shown hereon, if any, accepted by the City Council of the City of Wichita, Kansas, this 24 day of March, 1992.

Bob Knight, MAYOR

Pat Burnett, DEPUTY CITY CLERK

Enter on transfer record this 11 day of May, 1992.

Don Wright, COUNTY CLERK

STATE OF KANSAS)
) ss.
SEDGWICK COUNTY)

This is to certify that this instrument was filed for record in the Register of Deeds office this 11TH day of MAY, 1992. At 2:24 PM.

Pat Kettler, REGISTER OF DEEDS

Ed Rasa, DEPUTY