SHEET NO.	TOTAL SHEETS
1	9

CITY OF WICHITA, KANSAS

MICHAEL E. LINDEBAK, P.E., CITY ENGINEER

STORM WATER SEWER NO. 443

IN

CAPITAL ADDITION

CITY OF WICHITA PROJECT NO. 439-76-243-82271-000-000-001

INDEX NO. 756612

INDEX OF SHEETS

1. TITLE SHEET
2-3. STORM SEWER PLAN AND PROFILE
4. INLET PROTECTION DETAILS
5. MISC. DETAILS
6. STD. CONCRETE DETAILS
7. MANHOLE FRAME AND COVER DETAILS

PROJECT SURVEY CONTROL

BM - CHISELED "X" ON TOP OF CURB INLET, NORTH SIDE POLO AVE. & E. CHISHOLM EXTENDED NORTH.

ELEV. = 1136.33

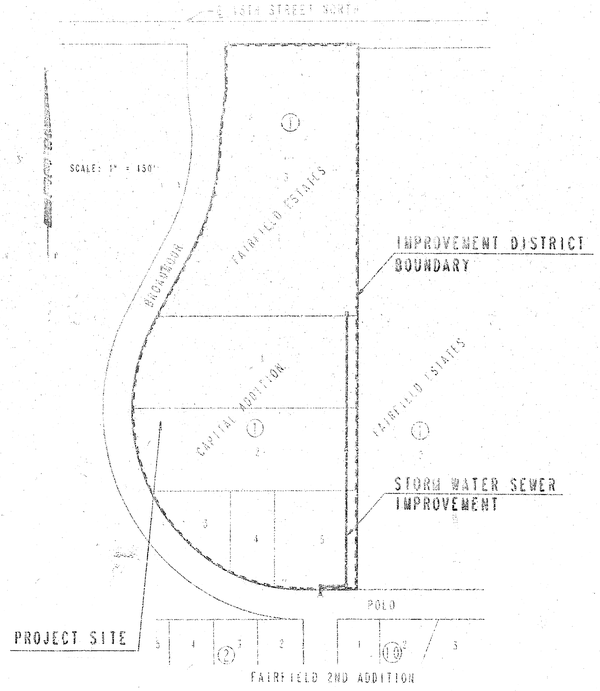

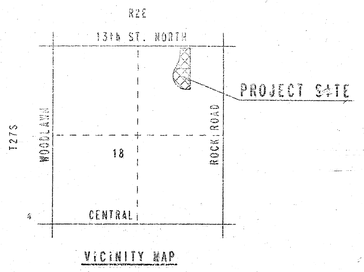

VICINITY MAP

GENERAL NOTES

UNDERGROUND UTILITY SERVICE LINES AND OVERHEAD UTILITY POLE LINES ARE TO BE ADJUSTED AS NECESSARY BY OTHERS PRIOR TO CONSTRUCTION UNLESS THE PLANS SPECIFICALLY CALL FOR THEIR ADJUSTMENT BY THE CONTRACTOR. EXISTING UTILITIES AND THEIR LOCATION, AS SHOWN ON THE PLANS, REPRESENT THE BEST INFORMATION OBTAINABLE FOR DESIGN LOCATION INFORMATION HAS BEEN OBTAINED FROM THE VARIOUS UTILITY COMPANIES AND IS EITHER FROM COMPANY RECORD DRAWINGS OR FIELD PROVIDED FIELD LOCATIONS. THE CONTRACTOR WILL BE REQUIRED TO WORK AROUND EXISTING UTILITIES WITHIN THE RIGHT-OF-WAY WHICH DO NOT CONFLICT WITH PROPOSED CONSTRUCTION. CONTRACTOR SHALL SATISFY HIMSELF OF SUBSURFACE CONDITIONS PRIOR TO CONSTRUCTION.

TREES AND SHRUBS IN PUBLIC RIGHT-OF-WAY WHICH ARE IN DIRECT CONFLICT WITH PROPOSED NEW CONSTRUCTION SHALL BE REMOVED BY THE CONTRACTOR WITH THE ENGINEER'S APPROVAL. TREES AND SHRUBS WHICH ARE NOT IN DIRECT CONFLICT WITH PROPOSED NEW CONSTRUCTION SHALL BE SAVED AND PROTECTED FROM DAMAGE.

RUBBLE FROM THE REMOVAL OF MISCELLANEOUS STRUCTURES SHALL BE DISPOSED OF ON SITES TO BE PROVIDED BY THE CONTRACTOR AND APPROVED AS NOTED BELOW.

ALL DISPOSAL SITES MUST BE APPROVED BY THE KANSAS DEPARTMENT OF HEALTH AND ENVIRONMENT. MATERIAL EITHER STOCKPILED OR DISPOSED OF IN A FLOOD PLAIN WOULD REQUIRE A KANSAS STATE BOARD OF AGRICULTURE PERMIT. ANY MATERIAL DUMPED IN WATERS OF THE UNITED STATES OR WETLANDS IS SUBJECT TO U.S. CORPS OF ENGINEERS PERMITTING REGULATIONS. ANY MATERIAL BURIED OR STOCKPILED BEYOND APPROVED CONSTRUCTION LIMITS WOULD REQUIRE ADDITIONAL ARCHEOLOGICAL INVESTIGATIONS UNLESS BURIED IN A PREVIOUSLY APPROVED BORROW LOCATION.

BIDDER SHALL SATISFY HIMSELF OF SUBSURFACE CONDITIONS PRIOR TO BIDDING.

CONTRACTOR SHALL PROVIDE A MINIMUM FORTY EIGHT (48) HOUR ADVANCE NOTICE (EXCLUDING WEEKENDS AND HOLIDAYS) PRIOR TO BEGINNING ANY EXCAVATION, TO KANSAS ONE-CALL SYSTEM, A UTILITY LOCATION SERVICE, AT (316) 267-2470 TO REQUEST THE FOLLOWING UTILITY COMPANIES TO LOCATE ALL EXISTING LINES WITHIN THE PROJECT AREA: PEOPLES NATURAL GAS, K.C.P.&L. GAS, K.G.&E. ELECTRIC, SOUTHWESTERN BELL TELEPHONE, MULTIMEDIA CABLEVISION, CITY OF WICHITA SEWER MAINTENANCE AND CITY OF WICHITA WATER DEPARTMENT.

THE CONTRACTOR SHALL BE RESPONSIBLE FOR PRESERVING PROPERTY IRONS. THE CONTRACTOR WILL BE REQUIRED TO RE-ESTABLISH ANY PROPERTY IRONS WHICH ARE DAMAGED OR DESTROYED BY HIS CONSTRUCTION OPERATIONS. SUCH IRONS SHALL BE RE-ESTABLISHED BY A LICENSED LAND SURVEYOR IN ACCORDANCE WITH STATE LAWS.

THE CONTRACTOR SHALL PREVENT ANY DEBRIS FROM ENTERING THE STORM SEWER DURING CONSTRUCTION.

UPON COMPLETION OF THE PROJECT, THE CONTRACTOR WILL BE REQUIRED TO SEED, FERTILIZE, AND MULCH ALL AREAS DISTURBED DURING CONSTRUCTION USING K-31 FESCUE. ALL SEEDING, FERTILIZING, AND MULCHING SHALL CONFORM TO CURRENT CITY OF WICHITA STANDARD SPECIFICATIONS (SUBSIDIARY).

DRAWING NAME: 76-5501 Lots Ck-Sht#1
LOCATION FILE NAME:
CENTER POINT RATIO:
ROTATION ANGLE:
DATE LAST WORKED ON: Mar. 23, 1995
DAN CRONK

BOOKED
B-7-95
MCG
D-262

4.27.95

APRIL 1995

PLANS PREPARED BY

PROFESSIONAL ENGINEERING CONSULTANTS, P.A.

ENGINEERS

WICHITA, KANSAS

FAIRFIELD ESTATES

WICHITA, SEDGWICK COUNTY, KANSAS

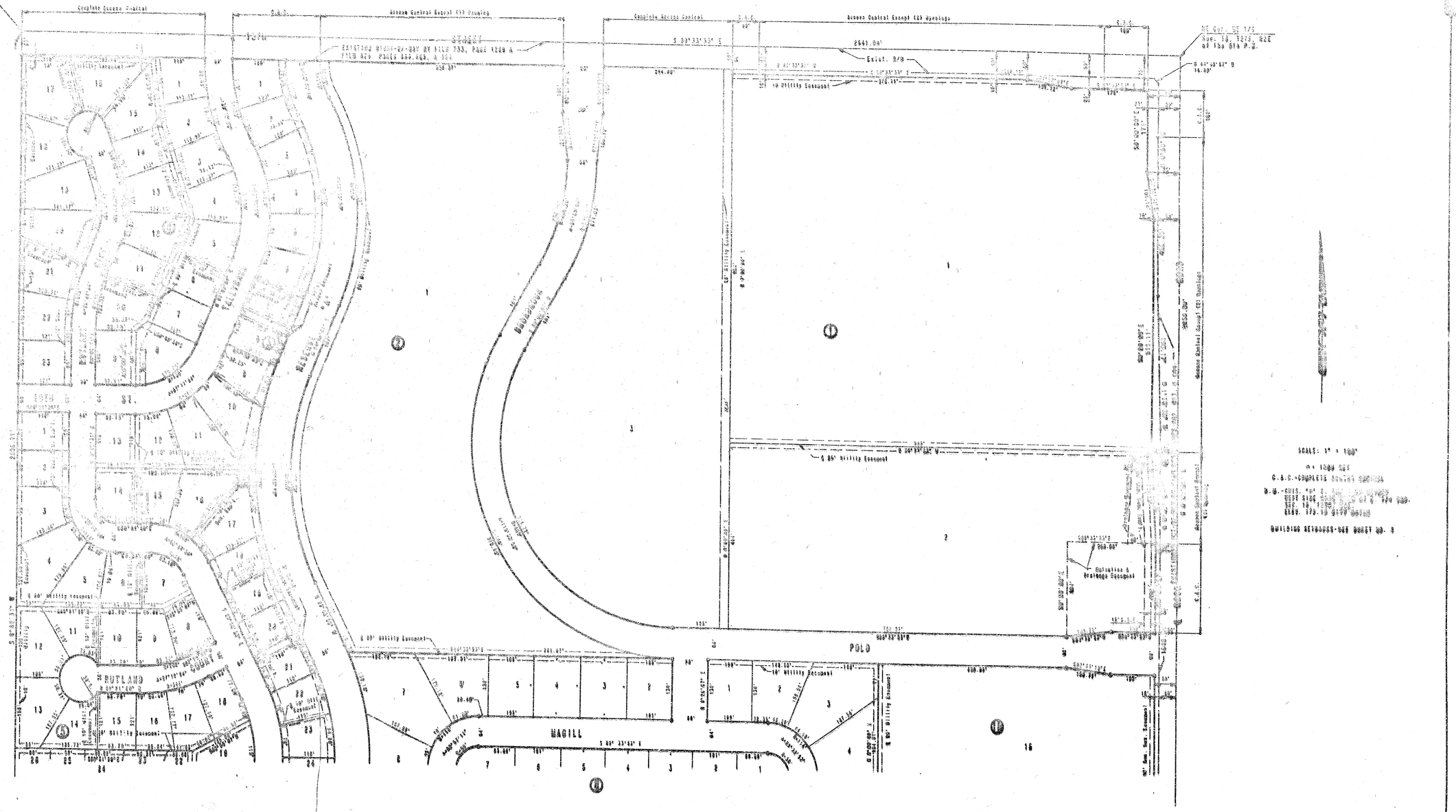

SHEET 3 OF 3

PROJECT NO.	SHEET NO.	TOTAL SHEETS
468-76-745-62271-000-000-001	3	9

CAPITAL ADDITION

TO WICHITA, SEDGWICK COUNTY, KANSAS

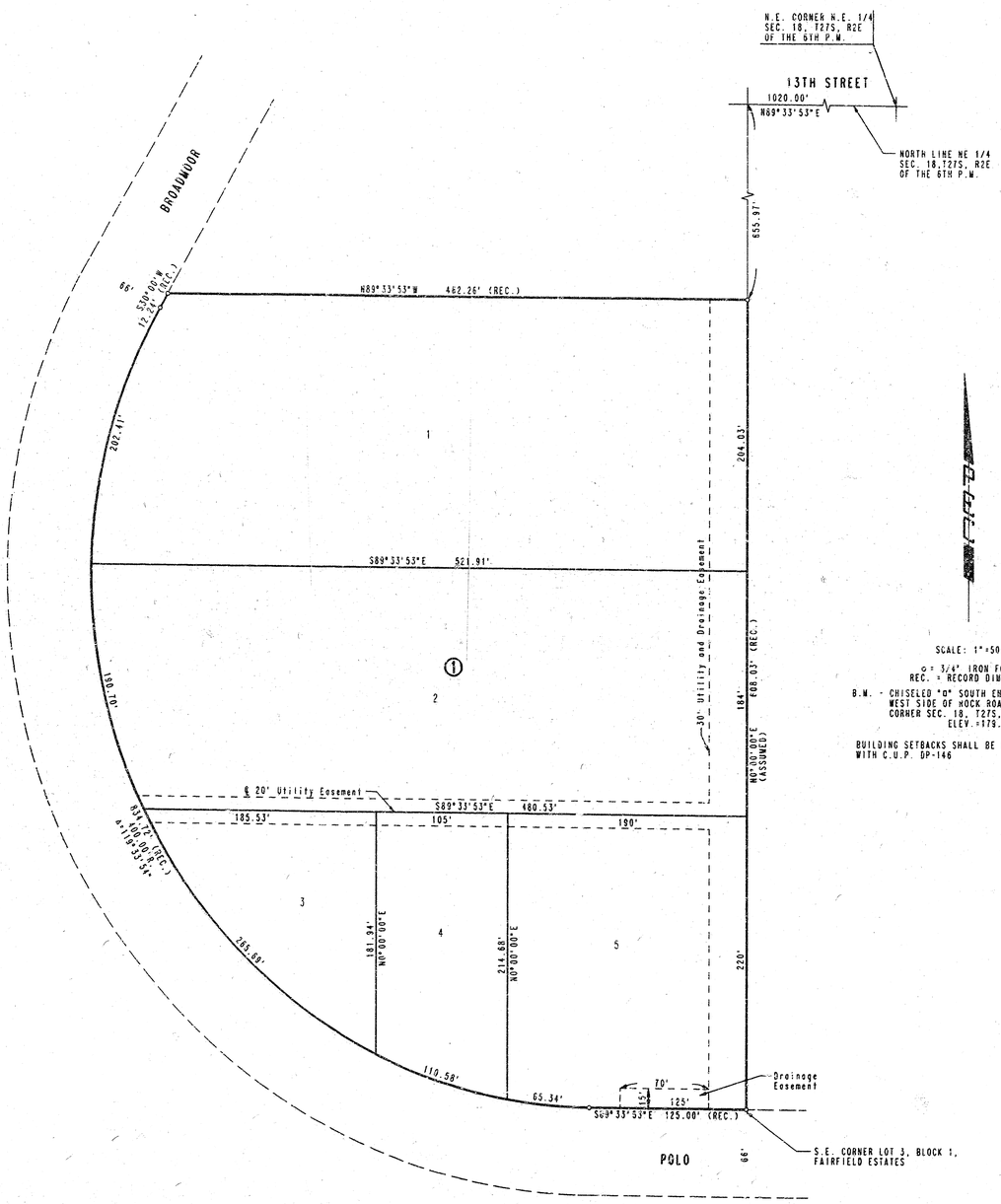

SCALE: 1"=50'

○ = 3/4" IRON FOUND
REC. = RECORD DIMENSION

B.M. - CHISELED "O" SOUTH END CURB RETURN WEST SIDE OF HOCK ROAD AT EAST 1/4 CORNER SEC. 18, T27S, R2E. ELEV.=179.18 CITY DATUM

BUILDING SETBACKS SHALL BE IN ACCORDANCE WITH C.U.P. DP-146

CAPITAL ADDITION
SWS 443

PLAT

PROFESSIONAL ENGINEERING CONSULTANTS, P.A.
ENGINEERS
WICHITA, KANSAS

Designed by		Checked by	
Drawn by	DEP, BJS	Date APR, 1995	Job No. 32-95101

DRAWING NAME: 32-95101 LOTH CH. CAP. ADD
LOCATION: R4 #229
OAK CREEK

60026'17"

PROJECT NO.	SHEET NO.	TOTAL SHEETS
468-76-245-82271-000-000-001	4	9

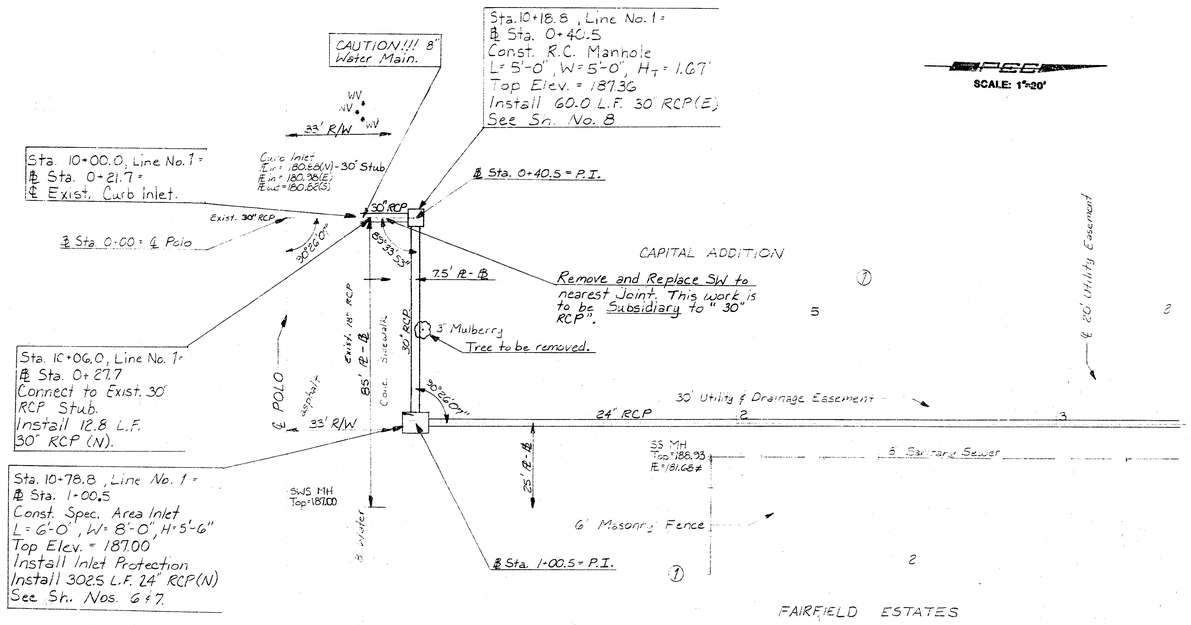

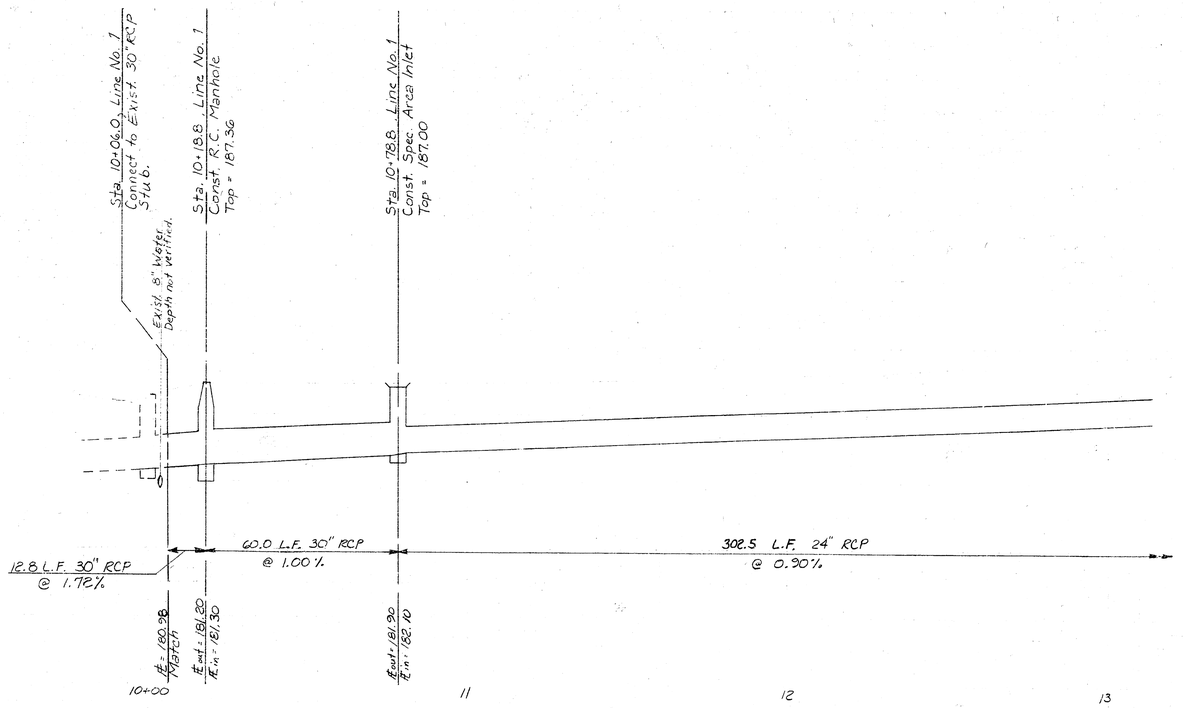

PROJECT NO.	SHEET NO.	TOTAL SHEETS
468-76-245-82271-000-000-001	5	9

SCALE: 1"=20'

CAPITAL ADDITION

FAIRFIELD ESTATES

10'x10' Drainage Easement. Film 1328, Pg. 619.

℄ 20' Util. Esm't.

30' Utility & Drainage Easement

8" Sanitary Sewer

8" Sanitary Sewer

25' R/W

SS MH
Top = 191.56
IE In = 180.45 ≠
IE out = 180.30 ≠

SS MH
Top = 193.24
IE = 181.27 ≠

6' Masonry Fence

Buried Elec.

℄ 20' Util. Esm't.

FAIRFIELD ESTATES

20' Util. Esm't

Sta. 13+81.3, Line No. 1
℄ Sta. 4+03.0
Const. Spec. Area Inlet.
L = 8'-0", W = 6'-0"
Top Elev. = 189.80
Install Inlet Protection.
Install 302.5 L.F.
24" RCP (N.)
See Sh. Nos. 6 & 7.

Sta. 16+83.8, Line No. 1
℄ Sta. 7+05.5
Const. Spec. Area Inlet
L = 8'-0", W = 6'-0"
Top Elev. = 192.60
Install Inlet Protection
See Sh. Nos. 6 & 7.

≠ Not Field Verified

Sta. 13+81.3, Line No. 1
Const. Spec. Area Inlet
Top = 189.80

Sta. 16+83.8, Line No. 1
Const. Spec. Area Inlet
Top = 192.60

195
190
185
180

302.5 L.F. 24" RCP @ 0.90%

302.5 L.F. 24" RCP @ 0.90%

Eout = 184.82
Ein = 185.02

Eout = 187.74

13 14 15+00 16 17

PROJECT NO.	SHEET NO.	TOTAL SHEETS
468-25-245 82270 000-000-001	8	9

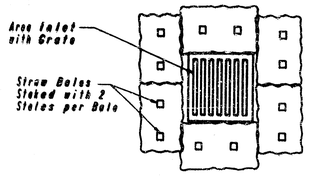

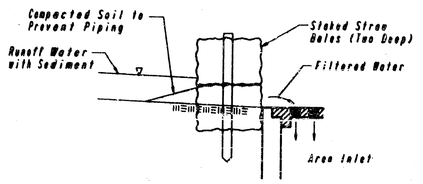

AREA INLET PROTECTION
STRAW BALES

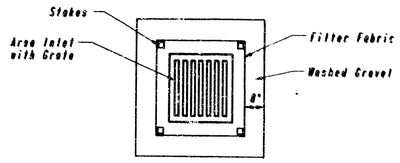

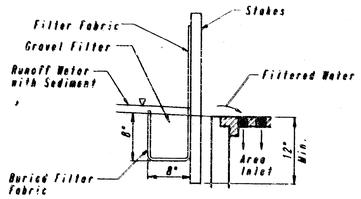

AREA INLET PROTECTION
FILTER FABRIC

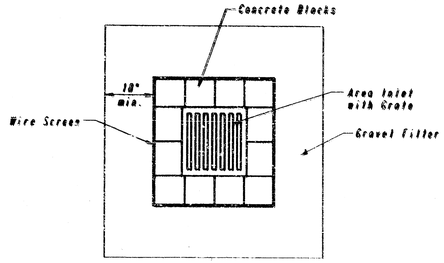

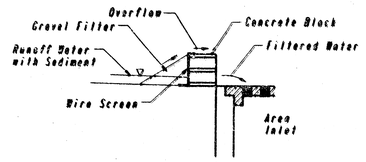

AREA INLET PROTECTION
BLOCK AND GRAVEL FILTER

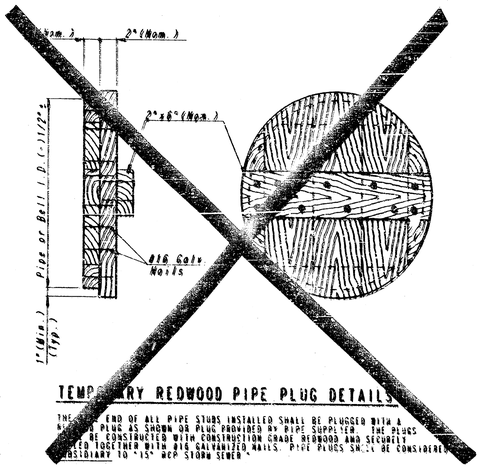

TEMPORARY REDWOOD PIPE PLUG DETAILS

THE END OF ALL PIPE STUBS INSTALLED SHALL BE PLUGGED WITH A REDWOOD PLUG AS SHOWN OR PLUG PROVIDED BY PIPE SUPPLIER. THE PLUGS SHALL BE CONSTRUCTED WITH CONSTRUCTION GRADE REDWOOD AND SECURELY FASTENED TOGETHER WITH #16 GALVANIZED NAILS. PIPE PLUGS SHALL BE CONSIDERED SUBSIDIARY TO "15" RCP STORM SEWER."

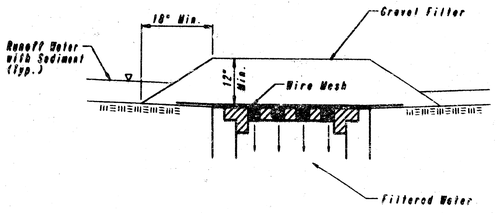

AREA INLET PROTECTION
GRAVEL AND WIRE MESH

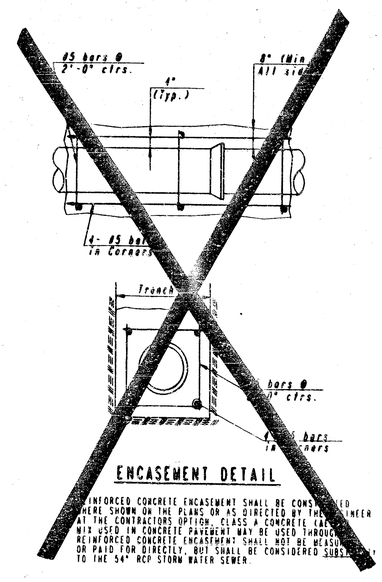

ENCASEMENT DETAIL

REINFORCED CONCRETE ENCASEMENT SHALL BE CONSTRUCTED WHERE SHOWN ON THE PLANS OR AS DIRECTED BY THE ENGINEER AT THE CONTRACTORS OPTION. CLASS A CONCRETE (AE) WITH #57 STONE AS USED IN CONCRETE PAVEMENT MAY BE USED THROUGHOUT. REINFORCED CONCRETE ENCASEMENT SHALL NOT BE MEASURED OR PAID FOR DIRECTLY, BUT SHALL BE CONSIDERED SUBSIDIARY TO THE "54" RCP STORM WATER SEWER.

1. INLET PROTECTION METHOD MAY BE ANY OF THE APPLICABLE TYPES SHOWN, AT THE CONTRACTORS OPTION.
2. GRAVEL FILTER SHALL BE A DURABLE, WELL-GRADED SAND-GRAVEL OR CRUSHED STONE, MAXIMUM 1-1/2 IN. SIZE. AS AN ALTERNATE GRAVEL FILLED BAGS OF BURLAP OR OTHER FABRIC MAY BE USED. WHERE BAGS ARE USED, THE WIRE SCREEN, WHERE SHOWN, MAY BE OMITTED.
3. FILTER FABRIC, WHERE USED, SHALL BE RESISTANT TO ULTRAVIOLET LIGHT. MATERIALS MAY BE SUPPLIED BY THE FOLLOWING MANUFACTURERS:

MIRAFI, INC.	-	100X
HOECHST FIBERS INDUSTRIES	-	TRAVIRA 1115
EXXON	-	TYPAR 3301 W

MATERIALS SUPPLIED BY THE ABOVE NAMED MANUFACTURERS SHALL BE ACCEPTED UPON VISUAL INSPECTION BY THE ENGINEER. OTHER COMPARABLE MATERIALS MAY BE USED IF APPROVED BY THE ENGINEER.

4. BALES USED FOR INLET PROTECTION MAY BE EITHER HAY OR STRAW, PROVIDED THEY ARE SOUND AND INTACT.
5. INLET PROTECTION SHALL BE ERECTED AS SOON AS THE STRUCTURE HAS BEEN BACKFILLED. MEASURES SHALL BE TAKEN TO PREVENT ENTRY OF SEDIMENT INTO THE STORM WATER SEWER SYSTEM DURING CONSTRUCTION OF THE STRUCTURE.
6. REMOVAL AND DISPOSAL OF ACCUMULATED SILT AND DEBRIS AND/OR REMOVAL AND RECONSTRUCTION OF INLET PROTECTION INSTALLATIONS SHALL BE PERFORMED THROUGHOUT THE PROJECT LIFE WHENEVER DEBRIS REACHES ONE-THIRD THE BARRIER HEIGHT, OR AS DEEMED NECESSARY BY THE ENGINEER. ULTIMATE REMOVAL AND DISPOSAL OF INLET PROTECTION AND DEBRIS WILL BE PERFORMED BY THE DEVELOPER.
7. MEASUREMENT AND PAYMENT: THE ITEM "INLET PROTECTION" SHALL BE MEASURED AND PAID FOR AT THE CONTRACT UNIT PRICE BID PER EACH FOR EACH INLET LOCATION PROTECTED REGARDLESS OF METHOD SELECTED BY THE CONTRACTOR. SAID PRICE SHALL BE CONSIDERED FULL COMPENSATION FOR EXCAVATION, COMPACTION, BACKFILL, SEDIMENT, AND DEBRIS REMOVAL AND DISPOSAL, AND ALL LABOR, MATERIALS, TOOLS, AND INCIDENTALS NECESSARY TO COMPLETE THE WORK. RECONSTRUCTION OF INLET PROTECTION INSTALLATION DUE TO DAMAGE BY WIND, FLOOD, FIRE, ETC. OR DUE TO ACTIONS BY THE CONTRACTOR OR OTHERS SHALL BE PERFORMED BY THE CONTRACTOR AS DIRECTED BY THE ENGINEER AT NO ADDITIONAL COST.

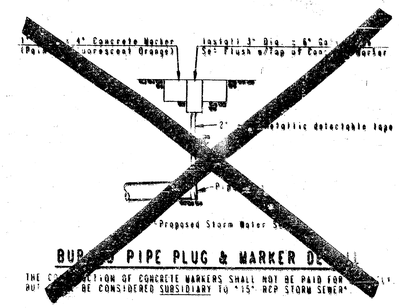

BURIED PIPE PLUG & MARKER DE

THE CONSTRUCTION OF CONCRETE MARKERS SHALL NOT BE PAID FOR BUT SHALL BE CONSIDERED SUBSIDIARY TO "15" RCP STORM SEWER.

~~NOTE: INLET PROTECTION FOR TYPE 16 CURB INLET AND FOR S-4 MANHOLE W/DECIVE GRATE (STA. 44+45.2, LINE NO. 1) SHALL BE THE SAME AS FOR AREA INLETS.~~

ADAPTED FROM: VIRGINIA SOIL AND WATER CONSERVATION COMISSION, 1985 AND DRAINAGE CRITERIA MANUAL, DENVER URBAN DRAINAGE AND FLOOD CONTROL DISTRICT 9-1-92

CAPITAL ADDITION
SWS NO. 443

INLET PROTECTION DETAILS

PROFESSIONAL ENGINEERING CONSULTANTS, P.A.
ENGINEERS
WICHITA, KANSAS

Designed by	MRB	Checked by	
Drawn by	DEP, BJS	Date APR., 1995	Job No. 98101

8/9

PLAN	SURVEYED	BY
	DRAWN	
DATE BOOK	CK NOTES	
NO.	ALL DIMS. & DIST. CHECKED	
	ALL OF WAY CHECKED	

DRAWING NAME: 32-94120-2 SEP/ERO
LOCATION: DI DWG #1098
CENTER COORDINATES:
PLOT SCALE: 1=1
DATE LAST MODIFIED ON: MAR. 3, 1995
BAR CHUNK

PROJECT NO.	SHEET NO.	TOTAL SHEETS
468-76-245-82231-000-000-001	7	9

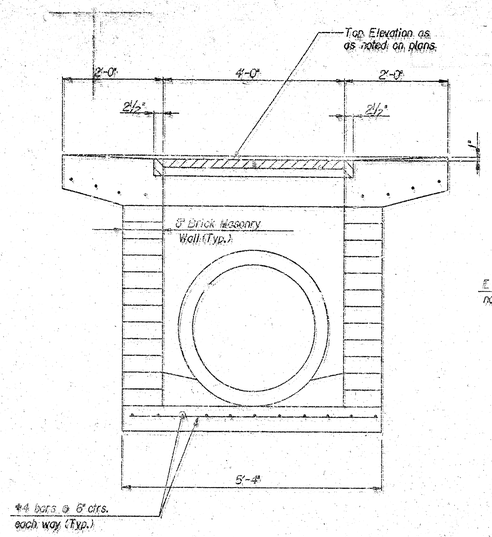

SECTION A-A

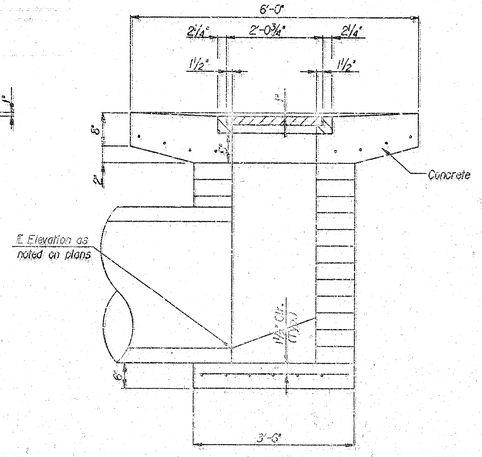

SECTION B-B

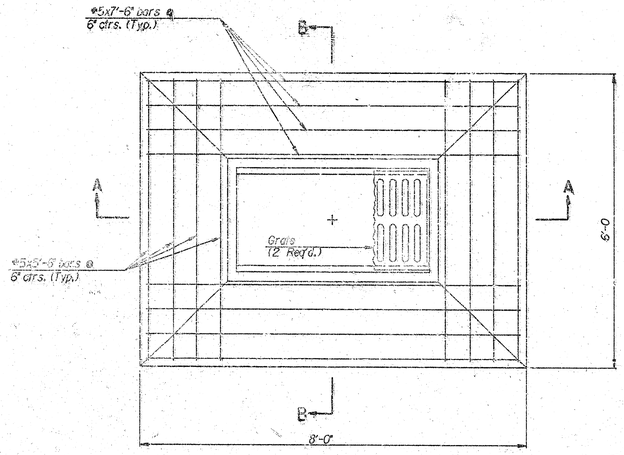

PLAN

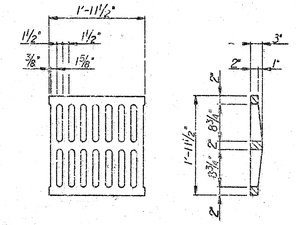

GRATE DETAIL
(Wt.=190 lbs.)
(2 Required)

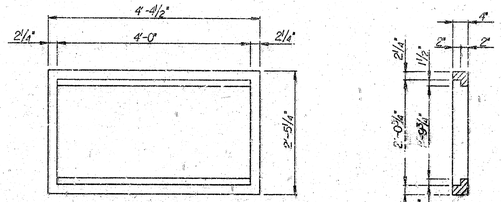

FRAME DETAIL
(Wt.=460 lbs.)

STANDARD AREA INLET

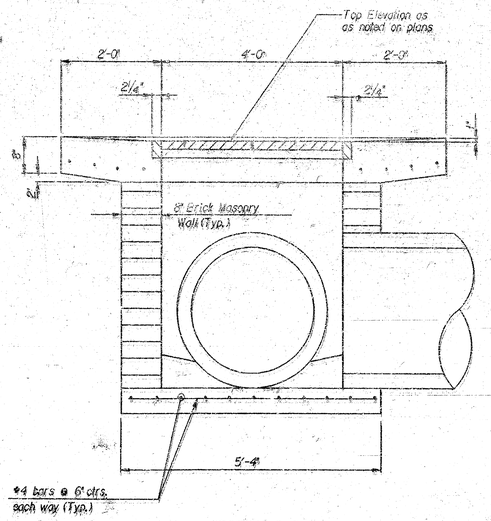

SECTION C-C

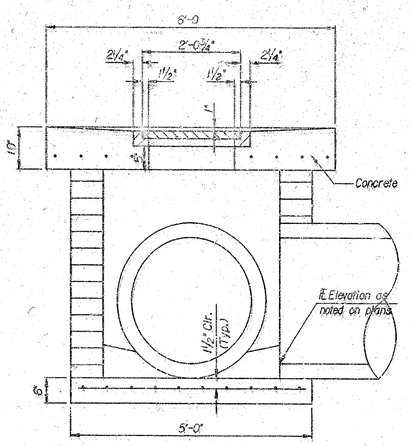

SECTION D-D

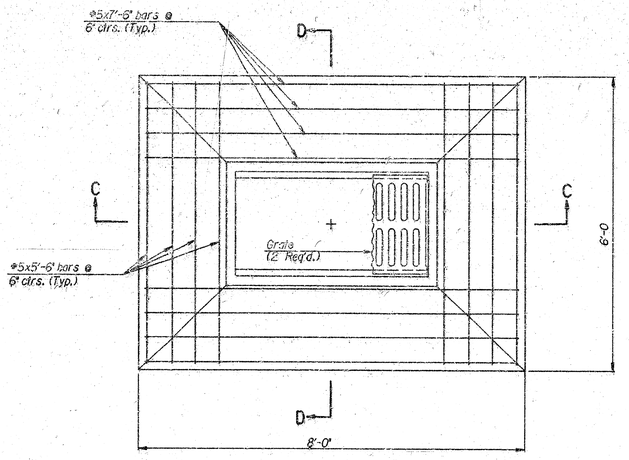

PLAN

SPECIAL AREA INLET

GENERAL NOTES

CONCRETE SHALL BE C.O.W. STANDARD PAVING MIX, ALL EXPOSED EDGES SHALL BE FINISHED WITH AN APPROVED EDGING TOOL.

REINFORCING STEEL SHALL BE A MINIMUM GRADE 40, A.S.T.M. A615. ALL DIMENSIONS RELATIVE TO PLACEMENT OF REINFORCING ARE TO THE CENTERLINE OF BARS UNLESS OTHERWISE NOTED.

INLET CASTINGS SHALL BE MANUFACTURED USING GOOD QUALITY GRAY IRON CONFORMING TO CLASS 30 OF A.S.T.M. DESIGNATION A-48. DIMENSIONS AND WEIGHTS SHOWN ON THE DETAILED DRAWINGS SHALL BE CONSIDERED AS MINIMUM REQUIREMENTS AND ANY DEVIATIONS FROM THE DIMENSIONS SHOWN MUST BE SPECIFICALLY APPROVED. THE FINISHED CASTINGS SHALL BE OF UNIFORM QUALITY, FREE FROM BLOWHOLES, POROSITY, HARD SPOTS, SHRINKAGE DISTORTIONS OR OTHER EFFECTS.

CONSTRUCTION REQUIREMENTS AND MATERIALS FOR MASONRY WALLS SHALL CONFORM TO THE REQUIREMENTS OF THE STANDARD SPECIFICATIONS.

INLET FLOOR SHALL BE SHAPED WITH UNREINFORCED CONCRETE (8 SACK SAND MIX) TO CREATE FLOW CHANNELS AND TO INCREASE HYDRAULIC EFFICIENCY SUCH THAT THE INLET WILL BE SELF CLEANING BETWEEN ALL INLET AND/OR OUTLET PIPES.

AREA INLETS (STANDARD AND SPECIAL) SHALL BE MEASURED AND PAID FOR AT THE CONTRACT UNIT PRICE BID PER EACH. THIS SHALL BE CONSIDERED FULL COMPENSATION FOR ALL EXCAVATION, BACKFILLING, MATERIALS, LABOR, CONNECTION TO EXISTING STRUCTURES (IF REQUIRED), EQUIPMENT, TOOLS, AND INCIDENTALS NECESSARY TO COMPLETE THE WORK.

PIPES ENTERING EXISTING STRUCTURE SHALL BE CENTERED ON INSIDE FACE OF WALL.

CAPITAL ADDITION
SWS NO. 443

AREA INLET DETAILS

PROFESSIONAL ENGINEERING CONSULTANTS, P.A.
ENGINEERS
WICHITA, KANSAS

Designed by	MWB, GDD	Checked by			
Drawn by	DEP	Date	APR., 1995	Job No.	95101

7/9

usr/lusth/dgn-dalpow/inletdt.dgn
date plotted:
dether to-dar crank

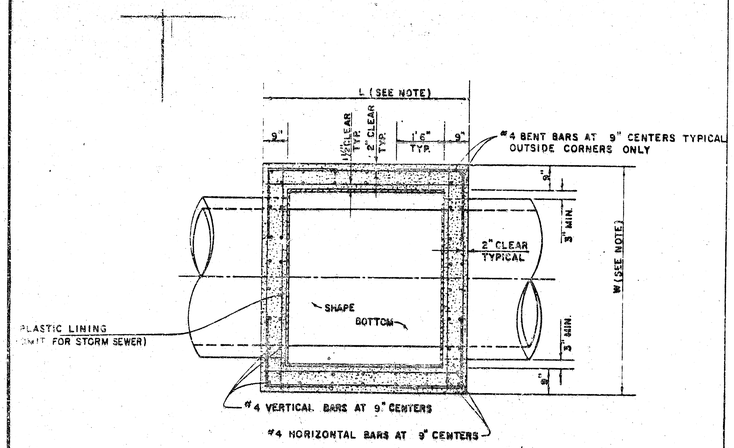

TOP VIEW

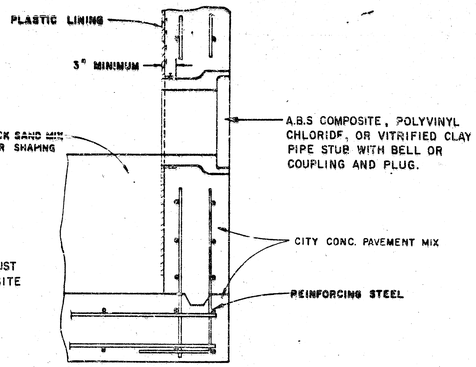

NOTE: WATERSTOP GASKETS MUST BE USED WITH A.B.S COMPOSITE OR P.V.C. PIPE.

PIPE STUB DETAIL
SANITARY SEWER ONLY

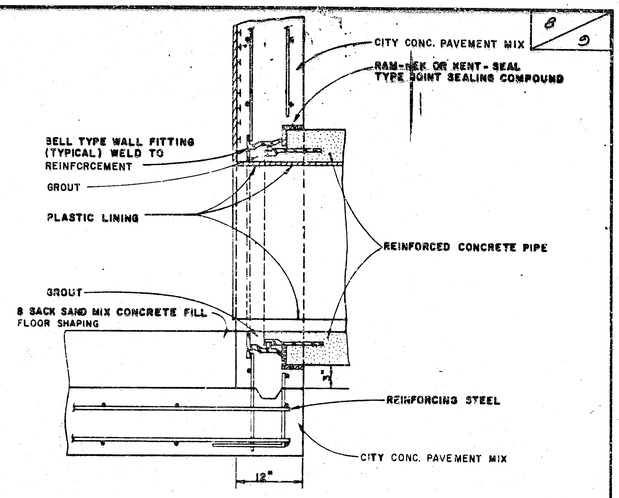

R.C.P. CONNECTION DETAIL
SANITARY SEWER ONLY

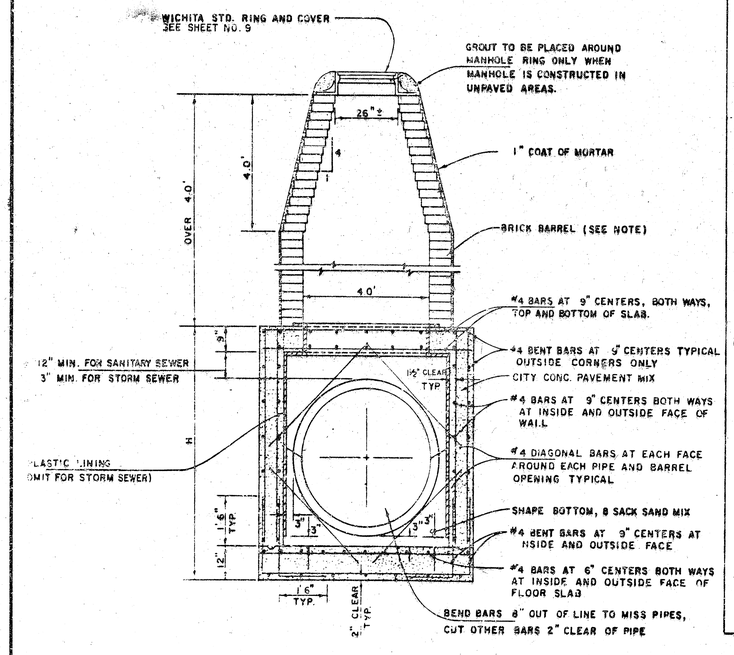

REINFORCED CONCRETE MANHOLE
DEPTH OF STACK: OVER 4.0'
SCALE 1" = 2'

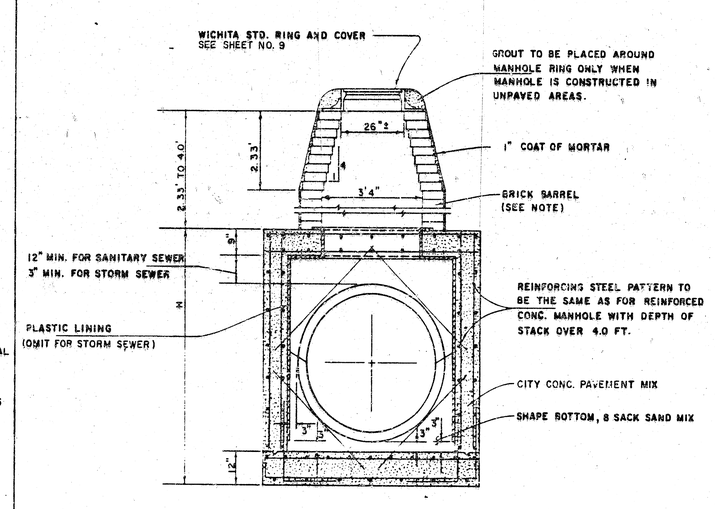

REINFORCED CONCRETE MANHOLE
DEPTH OF STACK: 2.33' TO 4.0'
SCALE 1" = 2'

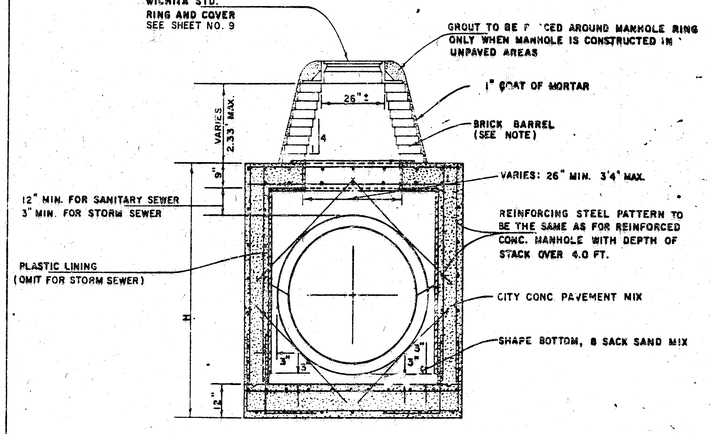

REINFORCED CONCRETE MANHOLE
DEPTH OF STACK: 0' TO 2.33'
SCALE 1" = 2'

NOTE :
BRICK BARRELS LESS THEN 16' DEEP SHALL HAVE 8" WALLS EXCEPT WHEN LOCATED WITHIN PUBLIC STREET OR ALLEY PAVEMENT THEN THE WALL SHALL BE 12". BRICK BARRELS MORE THEN 16' DEEP SHALL HAVE 12" WALLS. THE "L" AND "W" DIMENSIONS SHALL BE A MINIMUM OF 5'6" FOR BRICK BARRELS WITH 8" WALLS AND 6'2" FOR BRICK BARRELS WITH 12" WALLS WHEN THE BRICK BARRELS ARE OVER 4 FT. IN HEIGHT. COMLETED MANHOLE SHALL BE WITHOUT LEAKS AND WATERTIGHT.

Proj. No. 468-76-245-82271-000-000-001
REVISIED 1-7-85

STANDARD DETAILS
REINFORCED CONCRETE MANHOLES
CITY OF WICHITA

FEBRUARY 1984

MANHOLE FRAME AND COVER DETAIL

ADOPTED AS STANDARD DESIGN

BY

City of Wichita, Kansas

MANHOLE COVER

Weight: 180 Lbs.

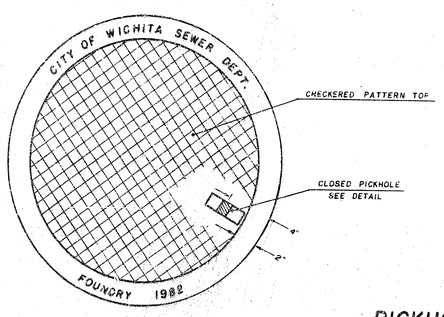

TOP VIEW

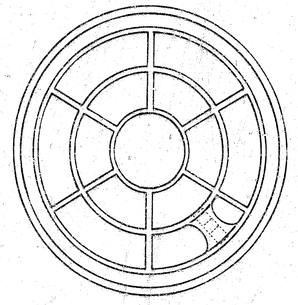

BOTTOM VIEW

PICKHOLE DETAIL

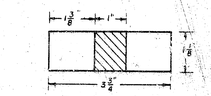

TOP VIEW

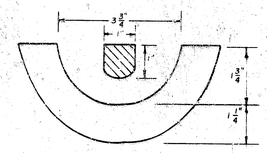

SECTION VIEW

MANHOLE FRAME

Weight: 240 Lbs.

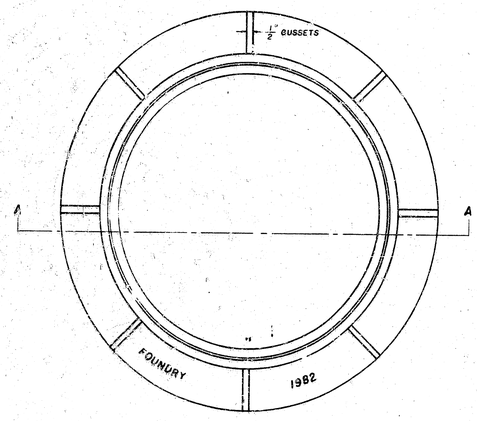

TOP VIEW

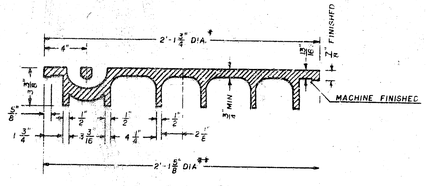

SECTION VIEW

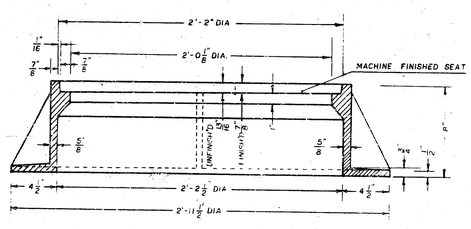

SECTION A-A

* OUTSIDE DIA TOP OF COVER

** OUTSIDE DIA BOTTOM OF COVER

GENERAL NOTES

1. MANHOLE CASTINGS SHALL BE MANUFACTURED USING GOOD QUALITY GRAY IRON CONFORMING TO CLASS 30 OF A.S.T.M. DESIGNATION A-48. DIMENSIONS AND WEIGHTS SHOWN ON THE DETAILED DRAWINGS SHALL BE CONSIDERED AS MINIMUM REQUIREMENTS AND ANY DEVIATIONS FROM THE DIMENSIONS SHOWN MUST BE SPECIFICALLY APPROVED. THE FINISHED CASTINGS SHALL BE OF UNIFORM QUALITY, FREE FROM BLOWHOLES, POROSITY, HARD SPOTS, SHRINKAGE DISTORTIONS OR OTHER DEFECTS.

2. MANHOLE CASTINGS SHALL BE MANUFACTURED SUCH THAT A COVER MANUFACTURED BY ANY ONE FOUNDRY WILL FIT INTERCHANGEABLY INTO A FRAME MANUFACTURED BY ANOTHER FOUNDRY AND STILL MEET ALLOWABLE CLEARANCES AND NON-ROCKING REQUIREMENTS. THIS WILL REQUIRE MANUFACTURING OF THE MATCHING FACES ON THE COVER AND THE FRAME TO CLOSE TOLERANCES.

3. THE OUTSIDE CIRCUMFERENCE OF THE VERTICAL FACE OF THE COVER AND THE INSIDE CIRCUMFERENCE OF THE VERTICAL FACE IN THE FRAME RECESS SHALL BE MANUFACTURED TO TOLERANCES SUCH THAT THE CLEARANCE BETWEEN THE COVER AND FRAME WILL NOT EXCEED 1/8" AT ANY POINT AROUND THE CIRCUMFERENCE OF THE COVER. THE SEATING SURFACES BETWEEN THE COVER AND FRAME SHALL BE MACHINED SUCH THAT THESE SURFACES SHALL MAKE FULL CONTACT FOR THEIR FULL CIRCUMFERENCE TO PRECLUDE THE COVER FROM ROCKING IN THE FRAME.

4. THE MANHOLE FRAME AND COVER SHALL BE MARKED WITH LETTERING INDICATING THE NAME OF THE MANUFACTURER AND THE YEAR WHEN THE COVER OR FRAME WAS CAST. THE COVER SHALL BE FURTHER IDENTIFIED WITH REGARDS TO OWNERSHIP USING LETTERS AT LEAST 1" IN HEIGHT. THIS IDENTIFICATION SHALL BE "CITY OF WICHITA SEWER DEPARTMENT". THE WORD DEPARTMENT MAY BE ABBREVIATED. THE TEXTURE OF THE TOP SURFACE OF THE COVER SHALL BE MANUFACTURED IN A CHECKERED PATTERN DESIGN AS INDICATED ON THE DRAWINGS. SMOOTH BLOCKOUTS SHALL BE UTILIZED TO HIGHLIGHT THE LETTERING ON THE COVER SURFACE. THE TOTAL AREA OF SMOOTH SURFACE BLOCKOUT SHALL NOT EXCEED THE AREA AS INDICATED ON THE DRAWING. POSITIONING OF SMOOTH BLOCKOUTS AND LETTERING MAY VARY FROM THAT SHOWN ON THE DETAILED DRAWING.

JNL DEC. 1981

REVISED MAY 1993

Proj. No. 468-76-245-82271-000-000-001

2/2

18-1-3-10