DOUGLAS HEIGHTS ADDITION

STORM WATER SEWER #448

PROJECT NUMBER 468-76-245-82377-000-000-001

INDEX CODE: 750505

GENERAL NOTES

1. Interurban traffic generated outside the project area and local business or apartment traffic generated within the project area are to be carried through construction as further promulgated by project special provisions.

2. Underground utility service lines and overhead utility pole lines are to be adjusted as necessary by others prior to construction unless the plans specifically call for their adjustment be the Contractor or unless the plans specifically identify a utility to be adjusted by its owner during construction. Existing utilities and their location, as shown on the plans, represent the best information obtainable for design. Location information has been obtained from the various utility companies and is either from company record drawings or company-provided field locations. The Contractor will be required to work around existing utilities within the right-of-way which do not conflict with proposed construction.

3. A saw cut of at least one-half the depth of existing surface courses or one-fourth the depth of the existing total pavement thickness shall be provided at location where proposed construction abuts an existing surface course or pavement for which partial removal of that surface or pavement is required, except when saw cuts are within three (3) feet of an existing joint the removal shall be extended to the existing joint. Such saw cuts will not be paid for directly and this cost shall be considered as subsidiary to the removal of the surface or pavement.

4. Rubble from the removal of miscellaneous structures and excess excavation which is to be wasted shall be disposed of on sites to be provided by the Contractor. These sites shall be approved by the Engineer as to suitability, appearance and site location. Locations that, in the opinion of the Engineer, will leave an unsightly appearance will not be approved.

   All disposal sites must be approved by the Kansas Department of Health and Environment. Material either stockpiled or disposed of in a flood plain would require a Kansas State Board of Agriculture permit. Any material dumped in waters of the United States or wetlands is subject to U.S. Corps. of Engineers permitting regulations. Any material buried or stockpiled beyond approved construction limits would require additional archaeological investigations unless buried in a previously approved borrow location.

5. Properties within the project limits may have underground sprinkler systems in public right-of-way which conflict with new construction. The Contractor will be required to remove such improvements should they not be removed by their owner at the time of construction of the project. The Contractor will be required to salvage all sprinkler heads and/or valves and give such materials to their owner. Portions of underground sprinkler systems not in conflict with new construction shall be protected from damage and shall remain in place. All work in connection with underground sprinkler systems shall be considered as subsidiary to the contract pay items of work.

6. Trees and shrubs in public right-of-way shall be saved and protected from damage. Trees may be removed and reset at Contractor's option.

7. The Contractor shall give all property owners and/or tenants of developed property directly abutting the construction of this project a minimum of ten (10) days notice prior to start of construction.

8. Only active building drain lines which connect actual buildings to the storm sewer system are to be reconnected to the new storm sewer construction. Building drain lines and/or connections which have been abandoned are not to be reconnected to the new storm sewer construction. It will be the sole responsibility of the Contractor to ascertain which such building drain lines and/or connections are active and which such drains and/or connections have been abandoned. All work involved with building drain line construction and/or building drain line connections shall conform to the applicable sections of the City of Wichita Code. This work will be paid for at the unit prices bid for the various sizes and types of pipe involved. Connection of building drain lines to storm sewer pipe will be paid for at the unit price bid for Building Drain Line Connection and such connections shall be made in accordance with the details shown on the plan.

9. The Contractor shall be responsible for preserving property irons. The Contractor will be required to re-establish any property irons which are damaged or destroyed by his construction operations. Such irons shall be re-established by a licensed land surveyor in accordance with state laws.

10. Pavement removal and/or replacement will be measured and paid for on the lineal foot basis as measured along the centerline of the sewer regardless of width, pavement type and/or pavement thickness. Minimum limits of such pavement removal and replacement shall be one foot beyond the limits of the excavation made for the sewer or the structure, except when such lines of removal are within three (3) feet of an existing joint the limits of removal shall be extended to the existing joint. Removal and replacement of existing pavement shall conform to the applicable sections of the City of Wichita Standard Specifications.

11. Contractor will be required to provide a minimum notice of twenty-four (24) hours to utility companies prior to starting any excavation as follows:

    Kansas One-Call 687-2470

12. All lawn areas disturbed during construction shall be restored to equal or better condition than prior to construction, using grass sod of the same variety as existing.

13. The Contractor shall have the option of using PVC (SDR 35) or PVC profile-wall pipe as allowed by the supplemental specifications.

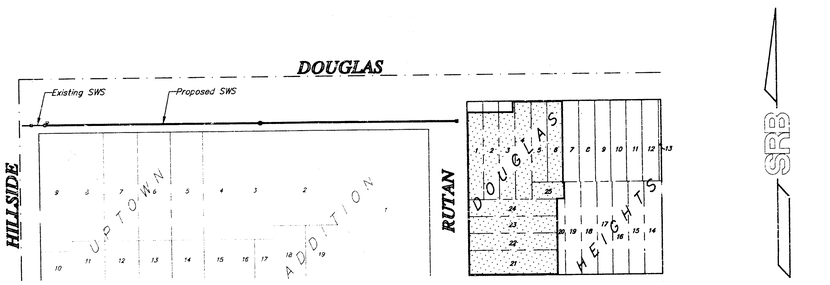

Scale 1" = 100'

IMPROVEMENT DISTRICT

Booked
12-7-94
MCG
D-242

Thomas C. Ruggles
5-23-94

INDEX OF SHEETS

1. TITLE SHEET
2.-3. PLAN AND PROFILE
4. STANDARD SHALLOW MANHOLE DETAIL
5. STANDARD TYPE II INLET DETAIL

CITY OF WICHITA, KANSAS
MICHAEL E. LINDEBAK - CITY ENGINEER

REVISED MAY 23, 1994

SRB
924 NORTH MAIN
WICHITA, KANSAS 67203
316-264-8008
FAX 264-4621
SAVOY, RUGGLES & BOHM, P.A.
ENGINEERING & SURVEYING

FILMED FROM THE BEST AVAILABLE COPY

DENCH MARK:
"+" CUT IN CENTER OF CONC. WALK AT NORTHEAST CORNER OF DOUGLAS AND HILLSIDE. ELEVATION 133.12 CITY DATUM

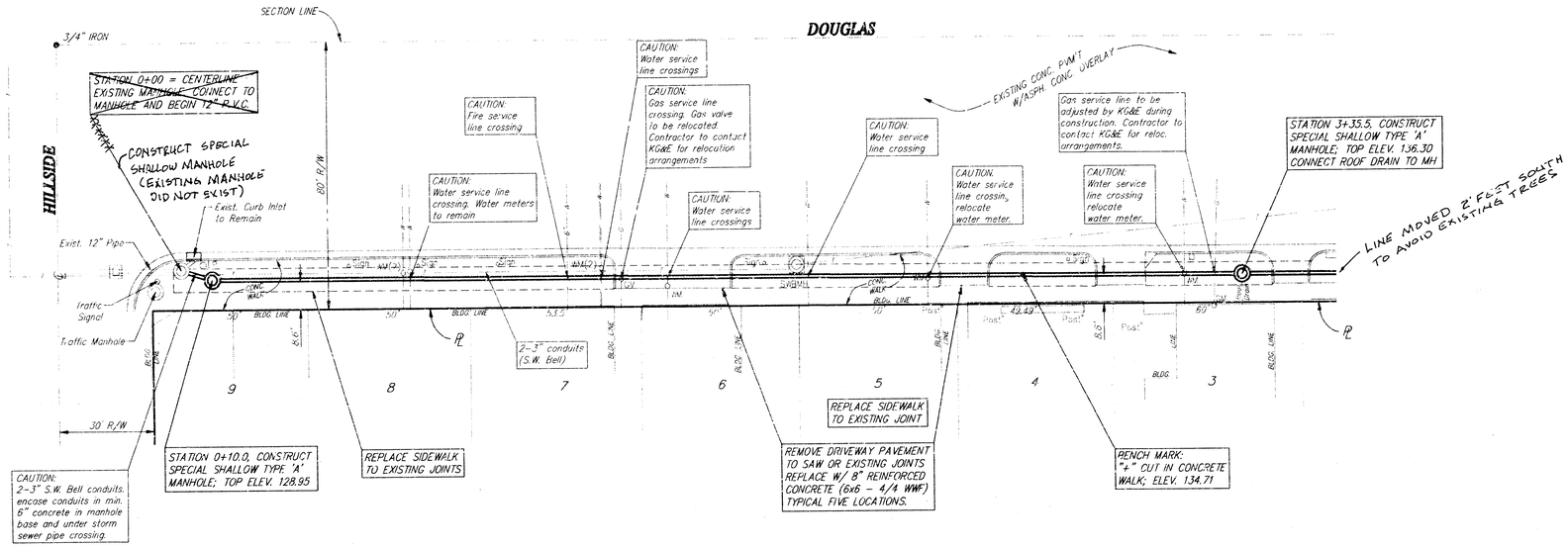

SCALE:
1"=20' Plan
1"=5' Profile (Vert.)

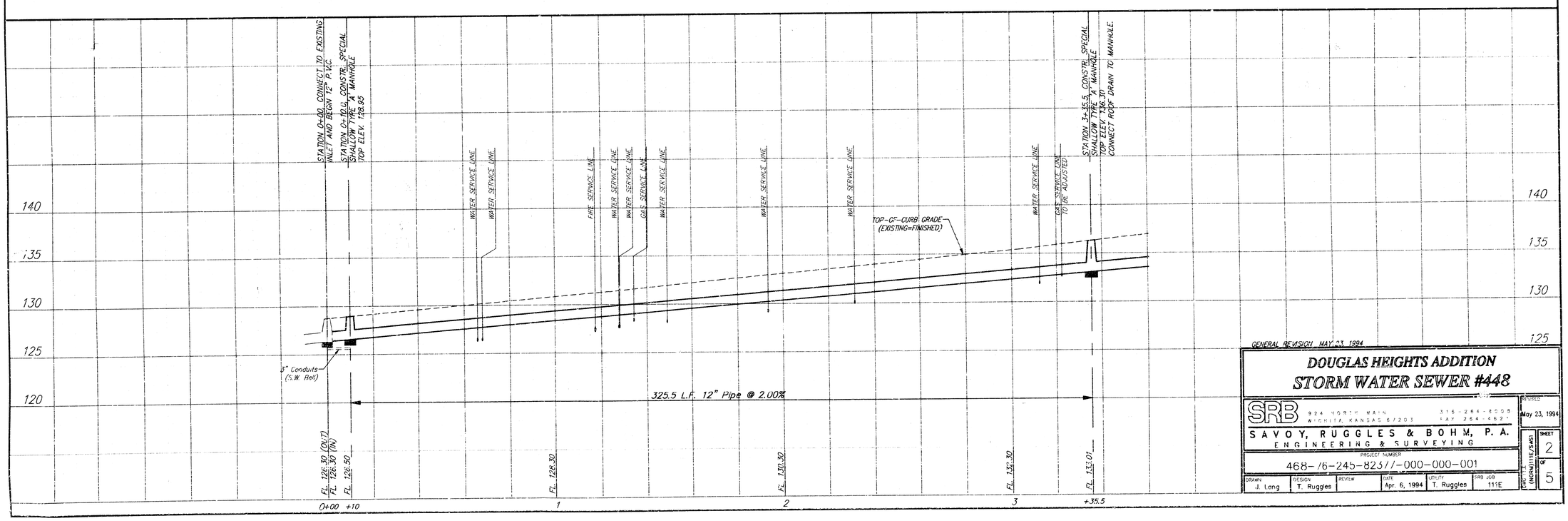

GENERAL REVISION MAY 23, 1994

DOUGLAS HEIGHTS ADDITION
STORM WATER SEWER #448

SRB
924 NORTH MAIN
WICHITA, KANSAS 67203
316-264-8008
FAX 264-4620
SAVOY, RUGGLES & BOHM, P. A.
ENGINEERING & SURVEYING

REVISED May 23, 1994

PROJECT NUMBER 468-/6-245-82377-000-000-001

DRAWN	DESIGN	REVIEW	DATE	UTILITY	SRB JOB
J. Lang	T. Ruggles		Apr. 6, 1994	T. Ruggles	111E

SHEET 2 OF 5

CONTRACT (NORM) 111E/SMS)

FILMED FROM THE BEST AVAILABLE COPY.

BENCH MARK:
"+" CUT IN CENTER OF CONC. WALK AT NORTHEAST CORNER OF DOUGLAS AND HILLSIDE. ELEVATION 133.12 CITY DATUM

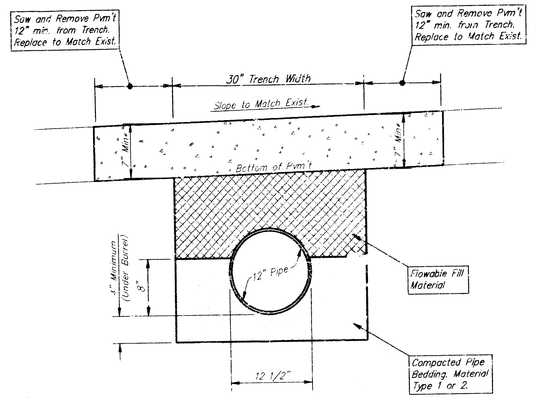

* Match Existing Pavement Thickness

DETAIL OF PAVEMENT REPLACEMENT AND FLOWABLE FILL

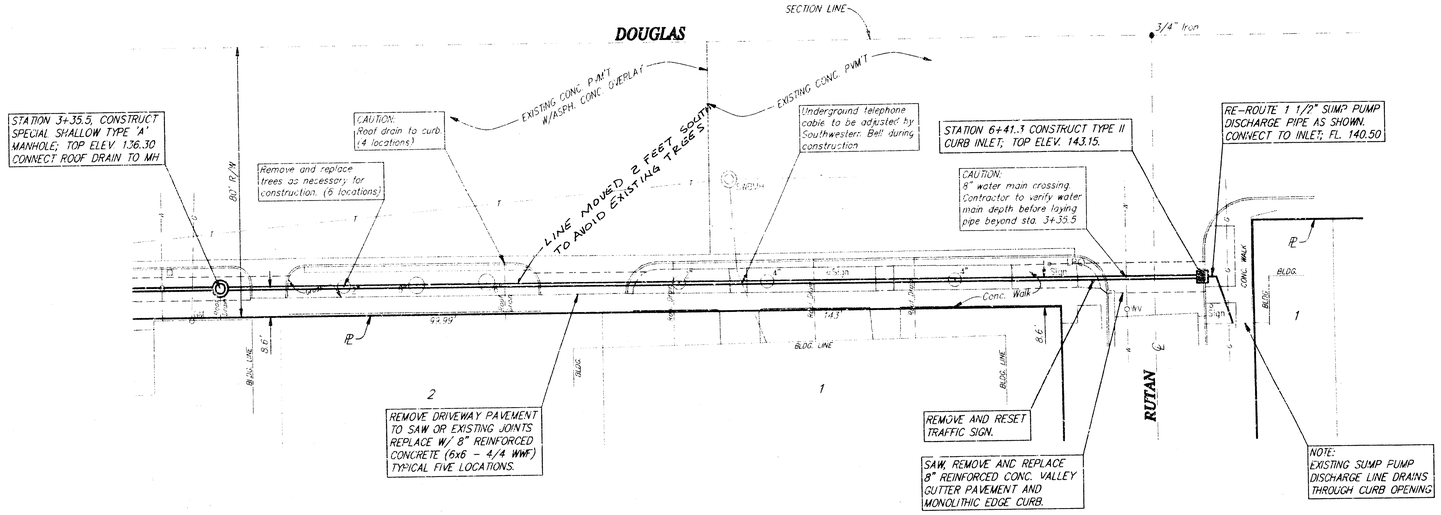

SCALE:
1"=20' Plan
1"=5' Profile (Vert.)

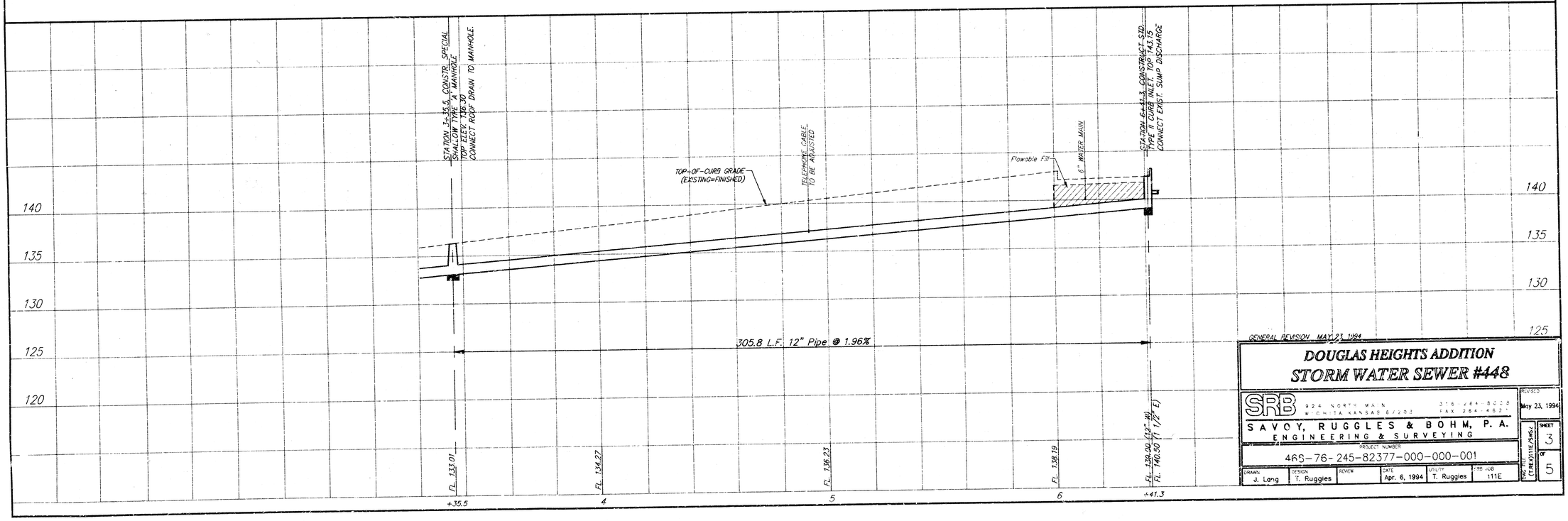

GENERAL REVISION MAY 23, 1994

DOUGLAS HEIGHTS ADDITION
STORM WATER SEWER #448

SRB 924 NORTH MAIN WICHITA KANSAS 67203 316 264-8008 FAX 264-4621
SAVOY, RUGGLES & BOHM, P. A.
ENGINEERING & SURVEYING

REVISED May 23, 1994
SHEET 3 OF 5
PROJECT NUMBER 469-76-245-82377-000-000-001
DRAWN J. Lang | DESIGN T. Ruggles | REVIEW | DATE Apr. 6, 1994 | UTILITY T. Ruggles | 1988 JOB 111E
DRG. FILE (T:\ENGR\111E\DWG\)

FILMED FROM THE BEST AVAILABLE COPY.

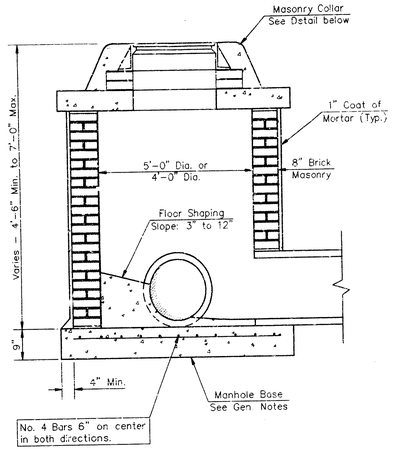

SHALLOW TYPE "A" MANHOLE

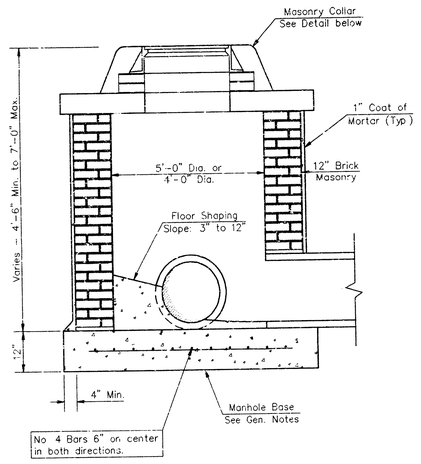

SHALLOW TYPE "B" MANHOLE

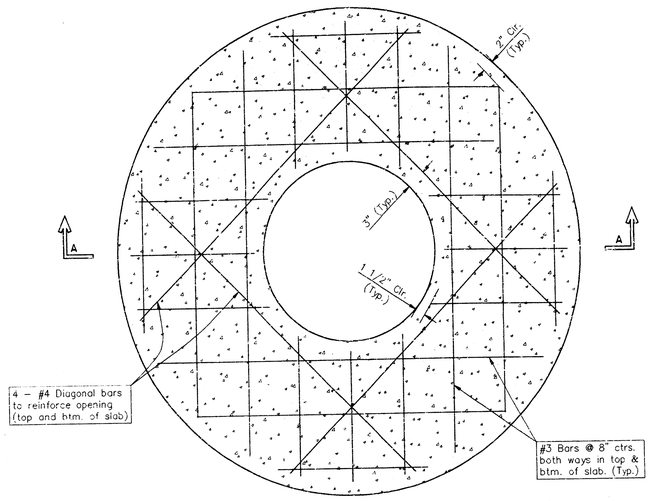

PLAN

GENERAL NOTES

1. Mortar used in masonry construction shall contain 8 sacks of cement per cubic yard. Concrete used in manhole bases shall conform to the requirements of concrete for concrete pavement construction as specified in the city standard paving specifications using city concrete cement mix without air entraining admixture. Mortar shall be placed around the manhole ring as shown on the drawings when manholes are constructed in unpaved areas. Type "A" shallow manholes can be used on sewers when the manhole is not located within public street pavement. Manholes constructed where pipe sizes are smaller than 24" shall have an inside diameter of 4'. Mannoles constructed where pipe sizes are 24" or larger shall have an inside diameter of 5'. Completed manhole shall be without leaks and water tight.

2. Reinforcing steel shall be installed in the manhole bases and shall consist of no. 4 bars placed on 6" centers in both directions. The manhole base reinforcement shall be placed 6" above the bottom of the manhole base. All costs for furnishing and installing reinforcing steel shall be included in the unit price bid for the manhole.

3. The floors of all manholes shall be shaped with flow channels such that the manholes will be self cleaning and free of areas where solids could be deposited as sewage flows through the manhole from all inlet pipes to the outlet pipe. Flow channels shall be formed to match the bottom halves of the inflowing pipes and the outflowing pipe as shown by the drawings. Manhole floors shall have slopes of 3 inches per foot in the areas outside of the flow channels sloped toward the flow channels. Pipes laid through manholes shall have the top half removed to neat lines for the full inside diameter of the manhole. Manhole floors shall then be shaped around the bottom half of the pipe which forms the flow channel.

4. Pipes installed within the excavation made for the manhole shall be cradled with concrete to the limits of the manhole excavation. When clay pipe is used, the cradle shall extend to the first joint outside the manhole. The cradle shall be terminated at the clay pipe joint in a manner which will maintain the flexibility of the joint. Cost of cradle within manhole excavation or to clay pipe joints adjacent to manhole shall be included in the unit price bid for the manhole.

5. Manhole cover castings and manhole frame castings shall conform to the requirements as indicated in the standard specifications and as shown in the standard detail drawings.

6. The crowns of inflowing pipes shall never be set lower than the crown of the outflowing pipe.

7. Standard shallow manholes type "A" and "B" shall be paid for at the unit price bid per each for the type and diameter indicated. Standard special shallow manholes type "A" and "B" shall be paid for at the unit price bid per each for the type indicated. All standard shallow manhole diameters will be 4' unless indicated otherwise.

8. All brick used in manhole construction shall meet Grade SW of ASTM C652 or C62-87.

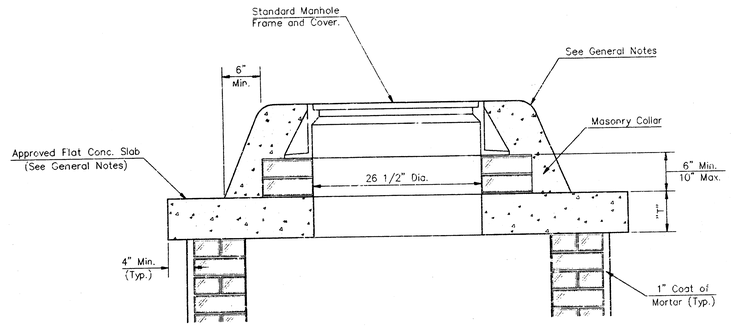

MASONRY COLLAR DETAIL

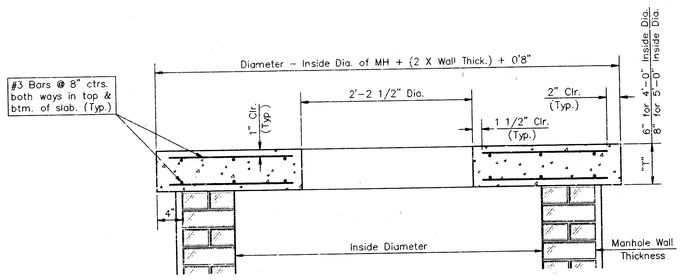

SECTION A-A

FLAT CONCRETE SLAB DETAILS

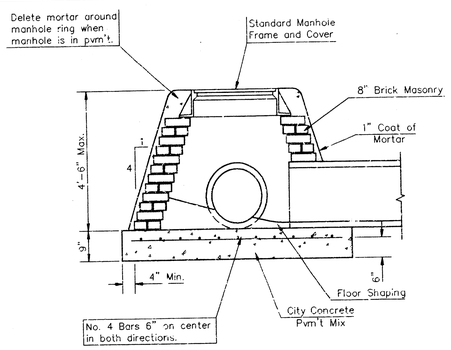

SPECIAL SHALLOW TYPE "A" MANHOLE

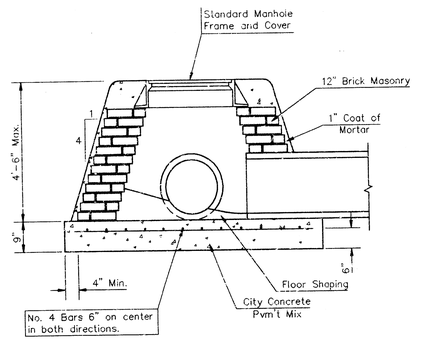

SPECIAL SHALLOW TYPE "B" MANHOLE

SHALLOW MANHOLE DETAILS
SEWER APPURTENANCES DETAILS
CITY OF WICHITA, KANSAS

MISC. STANDARDS | 4 | 5

FILMED FROM THE BEST AVAILABLE COPY.

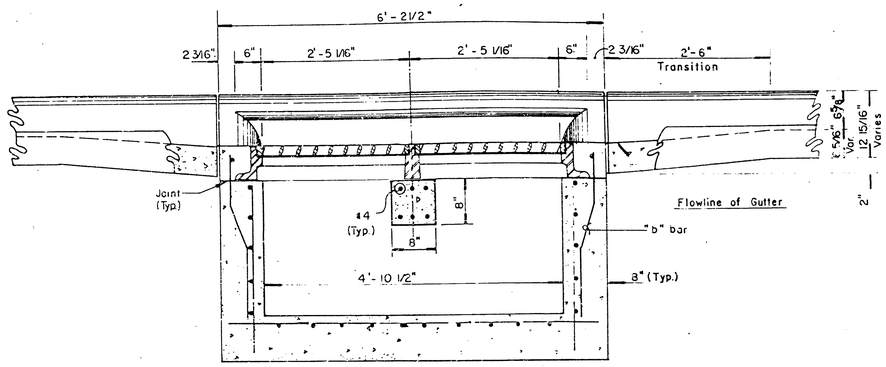

SECTION C - C

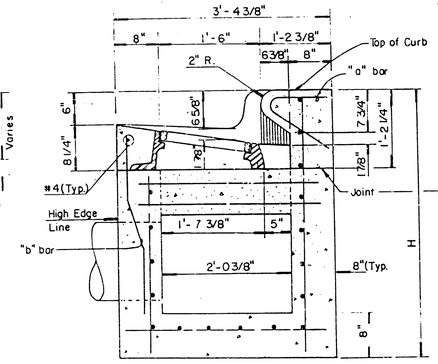

SECTION A-A

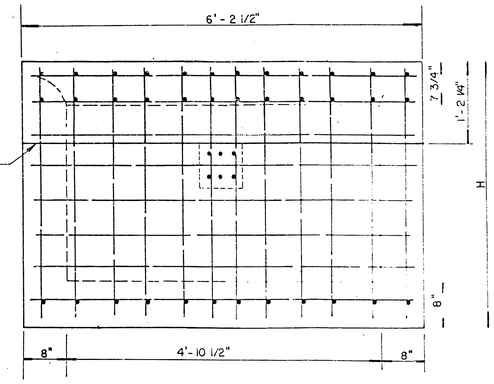

REAR WALL

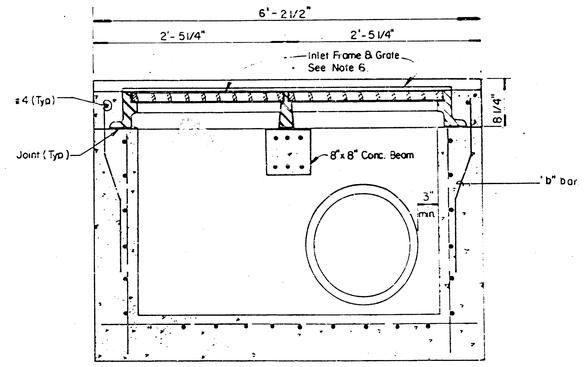

SECTION D-D

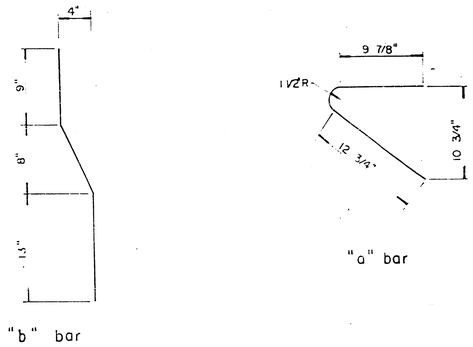

BENDING DIAGRAM

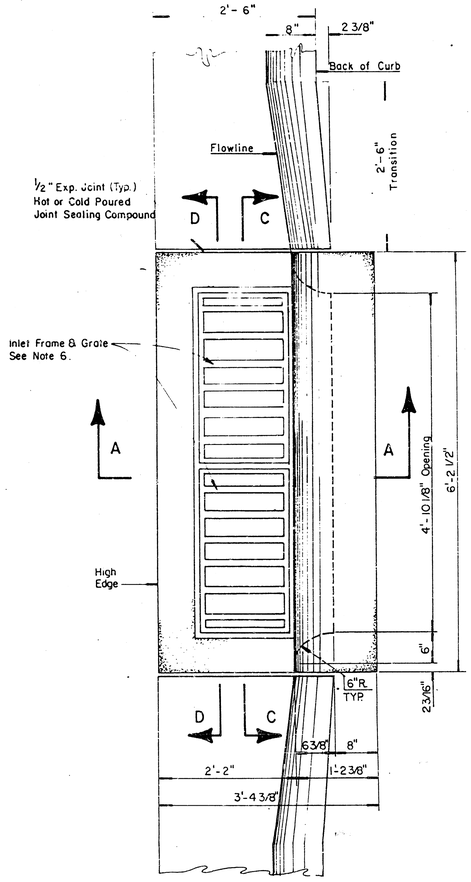

GENERAL NOTES:

1. Use the concrete mix specified for the City of Wichita concrete pavement throughout. All exposed edges shall be finished with an edging tool. Reinforcing bars shall be bent around pipe.
2. Inlet invert shall be shaped with 8 sack mix concrete to create flow channels and to increase hydraulic efficiency such that the inlet will be self cleaning between all inlet and/or outlet pipes.
3. All bars are #4 with 6" spacing and shall have a minimum clearance of 1½ inches unless otherwise noted on the plans.
4. When directed by the Engineer, a small opening may be required in the back of the inlet in order to drain a low area. Reinforcing bars will extend through the openings. No deductions in concrete quantities will be made for these openings.
5. No deductions will be made in pay length of curb, gutter, or curb and gutter through the inlet area.
6. Use Neenah R-3288 HV Inlet Frame with Two Piece Grate or approved equal. Inlet frame to be proof load tested to 40,000 lbs. on unsupported side.
7. Reinforcing bars shall be cut or bent around pipes. No deduction in concrete quantities shall be made for pipe openings.
8. The vanes of the grate shall be oriented with respect to the flow arrows shown on the plans.
9. DEETER FOUNDRY, Inc. casting No. 2442/43 with style H grate is an approved equal to NEENAH castings specified. Inlet drawing is based on NEENAH castings and concrete walls and supports will require some field modification to accomodate DEETER castings.

DETAIL STANDARD TYPE II CURB INLET

CITY OF WICHITA, KANSAS

INLET OPENING = 6" x 4'-10 1/8"

JANUARY, 1987

5
5

FILMED FROM THE BEST AVAILABLE COPY