| SHEET NO. | TOTAL SHEETS |
|---|---|
| 1 | 9 |

# CITY OF WICHITA, KANSAS
## MICHAEL E. LINDEBAK, P.E., CITY ENGINEER

# STORM WATER SEWER NO. 453

## IN

# KANSAS SURGERY AND RECOVERY CENTER

## CITY OF WICHITA PROJECT NO. 468-82394
## INDEX NO. 751281

BOOKED 5-26-00 MG D-451

INDEX OF SHEETS


1. TITLE SHEET
2. PLAT AND HORIZONTAL CONTROL
3.-5. PLAN AND PROFILE - SWS IMPROVEMENTS
6. MISCELLANEOUS DRAINAGE DETAILS
7. REINFORCED CONCRETE MANHOLE DETAILS
8. SHALLOW MANHOLES TYPE "P" AND "C" DETAILS
9. MANHOLE FRAME AND COVER DETAILS


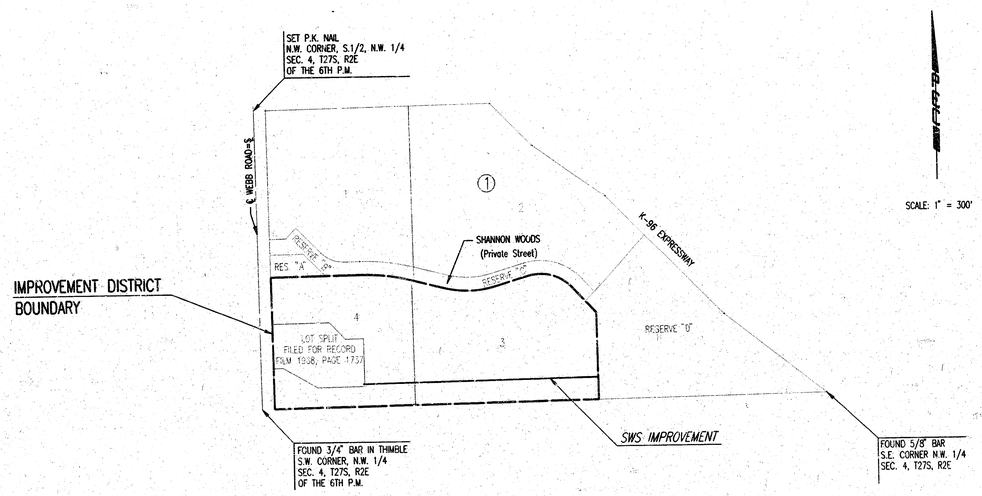


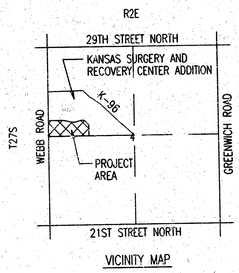


VICINITY MAP

GENERAL NOTES

UNDERGROUND UTILITY SERVICE LINES AND OVERHEAD UTILITY POLE LINES ARE TO BE ADJUSTED AS NECESSARY BY OTHERS PRIOR TO CONSTRUCTION UNLESS THE PLANS SPECIFICALLY CALL FOR THEIR ADJUSTMENT BY THE CONTRACTOR. EXISTING UTILITIES AND THEIR LOCATION, AS SHOWN ON THE PLANS, REPRESENT THE BEST INFORMATION OBTAINABLE FOR DESIGN. LOCATION INFORMATION HAS BEEN OBTAINED FROM THE VARIOUS UTILITY COMPANIES AND IS EITHER FROM COMPANY RECORD DRAWINGS OR COMPANY PROVIDED FIELD LOCATIONS. THE CONTRACTOR WILL BE REQUIRED TO WORK AROUND EXISTING UTILITIES WITHIN THE RIGHT-OF-WAY WHICH DO NOT CONFLICT WITH PROPOSED CONSTRUCTION. CONTRACTOR SHALL SATISFY HIMSELF OF SUBSURFACE CONDITIONS PRIOR TO BIDDING.

TREES AND SHRUBS IN PUBLIC RIGHT-OF-WAY WHICH ARE IN DIRECT CONFLICT WITH PROPOSED NEW CONSTRUCTION SHALL BE REMOVED BY THE CONTRACTOR WITH THE ENGINEER'S APPROVAL. TREES AND SHRUBS WHICH ARE NOT IN DIRECT CONFLICT WITH PROPOSED NEW CONSTRUCTION SHALL BE SAVED AND PROTECTED FROM DAMAGE.

RUBBLE FROM THE REMOVAL OF MISCELLANEOUS STRUCTURES SHALL BE DISPOSED OF ON SITES TO BE PROVIDED BY THE CONTRACTOR AND APPROVED AS NOTED.

ALL DISPOSAL SITES MUST BE APPROVED BY THE KANSAS DEPARTMENT OF HEALTH AND ENVIRONMENT. MATERIAL EITHER STOCKPILED OR DISPOSED OF IN A FLOOD PLAIN WOULD REQUIRE A KANSAS STATE BOARD OF AGRICULTURE PERMIT. ANY MATERIAL DUMPED IN WATERS OF THE UNITED STATES OR WETLANDS IS SUBJECT TO U.S. CORPS OF ENGINEERS PERMITTING REGULATIONS. ANY MATERIAL BURIED OR STOCKPILED BEYOND APPROVED CONSTRUCTION LIMITS WOULD REQUIRE ADDITIONAL ARCHEOLOGICAL INVESTIGATIONS UNLESS BURIED IN A PREVIOUSLY APPROVED BORROW LOCATION.

EXCESS EXCAVATED MATERIAL AND EXCESS TOPSOIL SHALL BE STOCKPILED OR WASTED WITHIN THE PLAT LIMITS. THE CONTRACTOR SHALL CONTACT THE OWNER'S ENGINEER AT 262-2691 FOR INFORMATION PERTAINING TO THE ACCEPTABLE LOCATIONS FOR THE DISPOSITION OF EXCESS MATERIAL. WASTE MATERIAL SHALL BE GRADED SMOOTH AND SLOPED TO DRAIN. THIS WORK SHALL BE CONSIDERED SUBSIDIARY TO OTHER BID ITEMS.

CONTRACTOR SHALL PROVIDE A MINIMUM FORTY-EIGHT (48) HOUR ADVANCE NOTICE (EXCLUDING WEEKENDS AND HOLIDAYS) PRIOR TO BEGINNING ANY EXCAVATION, TO KANSAS ONE-CALL SYSTEM, A UTILITY LOCATION SERVICE, AT (316) 687-2470 TO REQUEST THE FOLLOWING UTILITY COMPANIES TO LOCATE ALL EXISTING LINES WITHIN THE PROJECT AREA: K.G.S. GAS, PEOPLES NATURAL GAS, K.G.E. ELECTRIC, SOUTHWESTERN BELL TELEPHONE, MULTIMEDIA CABLEVISION, CITY OF WICHITA SEWER MAINTENANCE AND CITY OF WICHITA WATER DEPARTMENT.

THE CONTRACTOR SHALL CONTACT MR. DALE SMITH WITH KANEB PIPE LINE AT (316) 773-9000 AT LEAST 48 HOURS PRIOR TO BEGINNING CONSTRUCTION SO THEIR HIGH-PRESSURE PETROLEUM PIPELINE MAY BE PRECISELY LOCATED.

THE CONTRACTOR SHALL BE RESPONSIBLE FOR PRESERVING PROPERTY IRONS. THE CONTRACTOR WILL BE REQUIRED TO RE-ESTABLISH ANY PROPERTY IRONS WHICH ARE DAMAGED OR DESTROYED BY HIS CONSTRUCTION OPERATIONS. SUCH IRONS SHALL BE RE-ESTABLISHED BY A LICENSED LAND SURVEYOR IN ACCORDANCE WITH STATE LAWS.

THE WATER DEPARTMENT SHALL FIELD LOCATE WATER VALVES ONE TIME DURING CONSTRUCTION WHEN REQUESTED BY THE CONTRACTOR. IT SHALL BE THE CONTRACTOR'S RESPONSIBILITY TO PRESERVE SUCH FIELD LOCATIONS DURING THE CONSTRUCTION PROCESS. WATER VALVES, WATER VALVE BOXES OR FIRE HYDRANTS DAMAGED DURING CONSTRUCTION SHALL BE REPAIRED BY THE CONTRACTOR AT HIS OWN EXPENSE.

THE CONTRACTOR SHALL APPLY TEMPORARY SEED AND MULCH TO ALL UNPAVED AREAS DISTURBED BY HIS CONSTRUCTION OPERATIONS IN ACCORDANCE WITH THE STANDARD SPECIFICATIONS. SEED SHALL BE ANNUAL RYE APPLIED AT THE RATE OF 4 LBS. PER 1,000 SQUARE FEET. MULCH SHALL BE PRAIRIE HAY APPLIED AT THE RATE OF 15 BALES PER ACRE. THIS WORK SHALL BE PAID FOR AT THE CONTRACT LUMP SUM PRICE BID FOR "TEMPORARY PROJECT SEEDING".

DARWIN R. CROSS LICENSED 14896 KANSAS PROFESSIONAL ENGINEER 1/13/00

JANUARY 2000

PLANS PREPARED BY
PROFESSIONAL ENGINEERING CONSULTANTS, P.A.
ENGINEERS
WICHITA, KANSAS

DSNR: ORC OPER: DFC SCALE: 1=300.00
A:\453\97\01SHTITLE 01-11-2000 01:28:06 pm

| PROJECT NO. | SHEET NO. | TOTAL SHEETS |
|---|---|---|
| 468-82394 | 2 | 9 |

# KANSAS SURGERY AND RECOVERY CENTER ADDITION

## TO WICHITA, SEDGWICK COUNTY, KANSAS

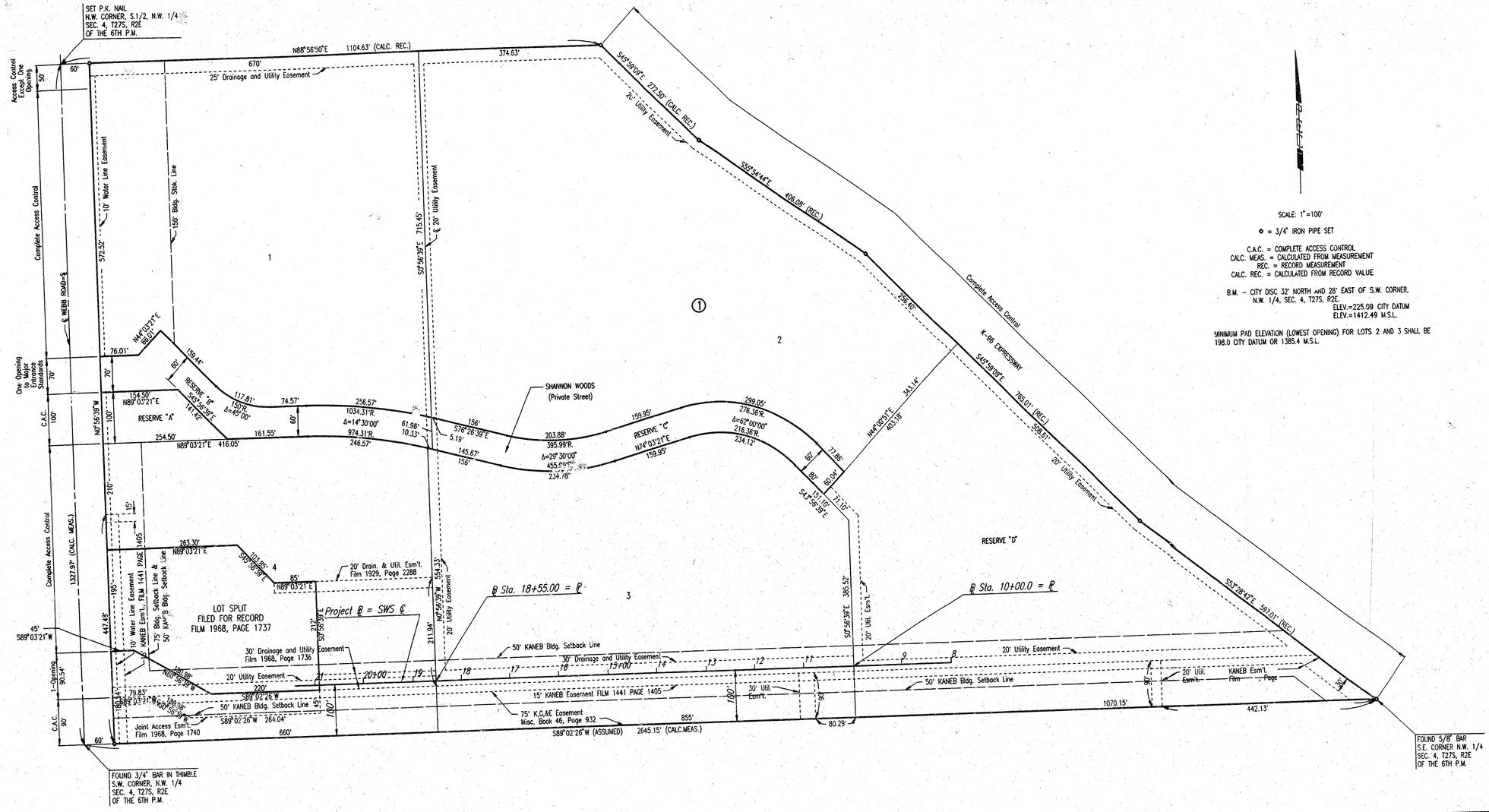


SCALE: 1"=100'

℘ = 3/4" IRON PIPE SET

C.A.C. = COMPLETE ACCESS CONTROL
CALC. MEAS. = CALCULATED FROM MEASUREMENT
REC. = RECORD MEASUREMENT
CALC. REC. = CALCULATED FROM RECORD VALUE

B.M. – CITY DISC 32' NORTH AND 28' EAST OF S.W. CORNER,
N.W. 1/4, SEC. 4, T27S, R2E.
ELEV.=225.09 CITY DATUM
ELEV.=1412.49 M.S.L.

MINIMUM PAD ELEVATION (LOWEST OPENING) FOR LOTS 2 AND 3 SHALL BE 198.0 CITY DATUM OR 1385.4 M.S.L.

DSNR: DRC OPER: DEP SCALE: 1=100.00
O:\1999\99720\PLAT 11-17-1999 09:37:39 am

KANSAS SURGERY AND RECOVERY CENTER ADDITION
STORM WATER SEWER NO. 453

## PLAT AND HORIZONTAL CONTROL


Professional Engineering Consultants, P.A.
309 S. TOPEKA • WICHITA, KANSAS 67202
316-262-2691 • FAX 316-262-3003


| Designed by | DRC | Checked by | |
|---|---|---|---|
| Drawn by | DEP | Date DECEMBER 1999 | Job No. 99720 |

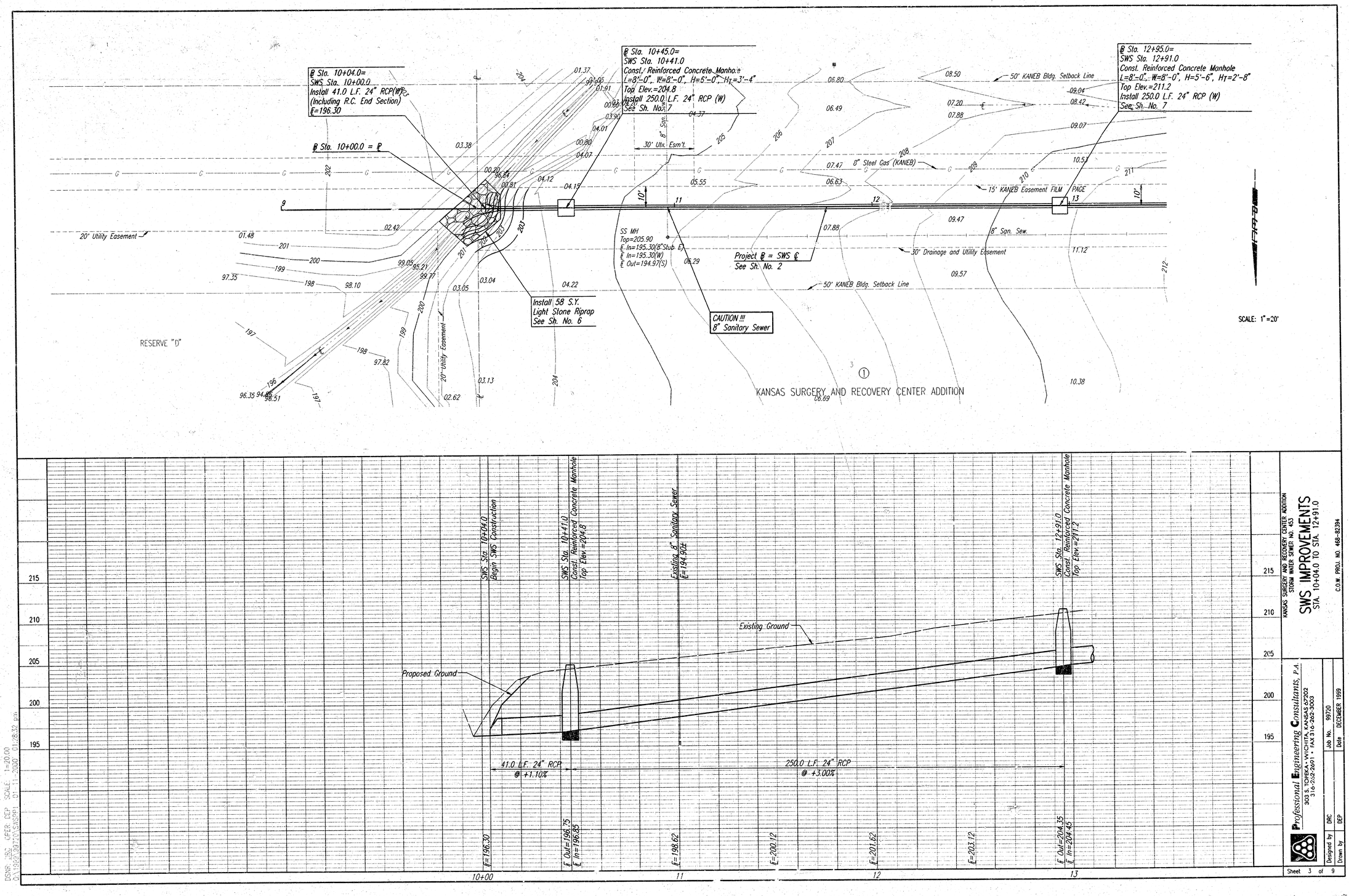


KANSAS SURGERY AND RECOVERY CENTER ADDITION
STORM WATER SEWER NO. 453

# SWS IMPROVEMENTS

STA. 10+04.0 TO STA. 12+91.0

C.O.W. PROJ. NO. 468-82394

Professional Engineering Consultants, P.A.
303 S. TOPEKA • WICHITA, KANSAS 67202
316-262-2691 • FAX 316-262-3003

| | | | |
|---|---|---|---|
| Designed by | DRC | Job No. | 99720 |
| Drawn by | DEP | Date | DECEMBER 1999 |

Sheet 3 of 9

DSNR: DRC OPER: DEP SCALE: 1=20.00
Q:\1999\99720\SWSPP1 01-11-2000 01:28:32 pm

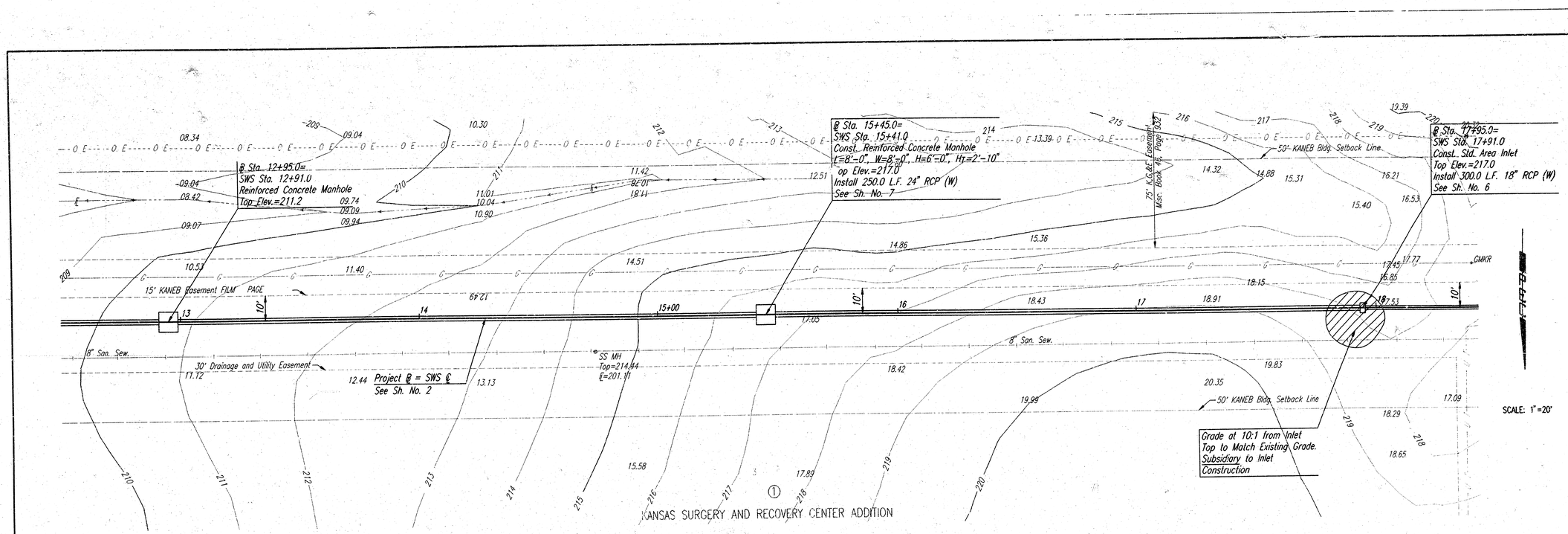


DSNR: DRC OPER: DEP SCALE: 1"=20.00
D:\1999\99720\SWSPP2 01-11-2000 01:18:51 pm

KANSAS SURGERY AND RECOVERY CENTER ADDITION
STORM WATER SEWER NO. 453

# SWS IMPROVEMENTS
STA. 12+91.0 TO STA. 17+91.0

C.O.W. PROJ. NO. 468-82394

Professional Engineering Consultants, P.A.
303 S. TOPEKA • WICHITA, KANSAS 67202
316-262-2691 • FAX 316-262-5063

| | |
|---|---|
| Designed by | DRC |
| Drawn by | DEP |
| Job No. | 99720 |
| Date | DECEMBER 1999 |

Sheet 4 of 9

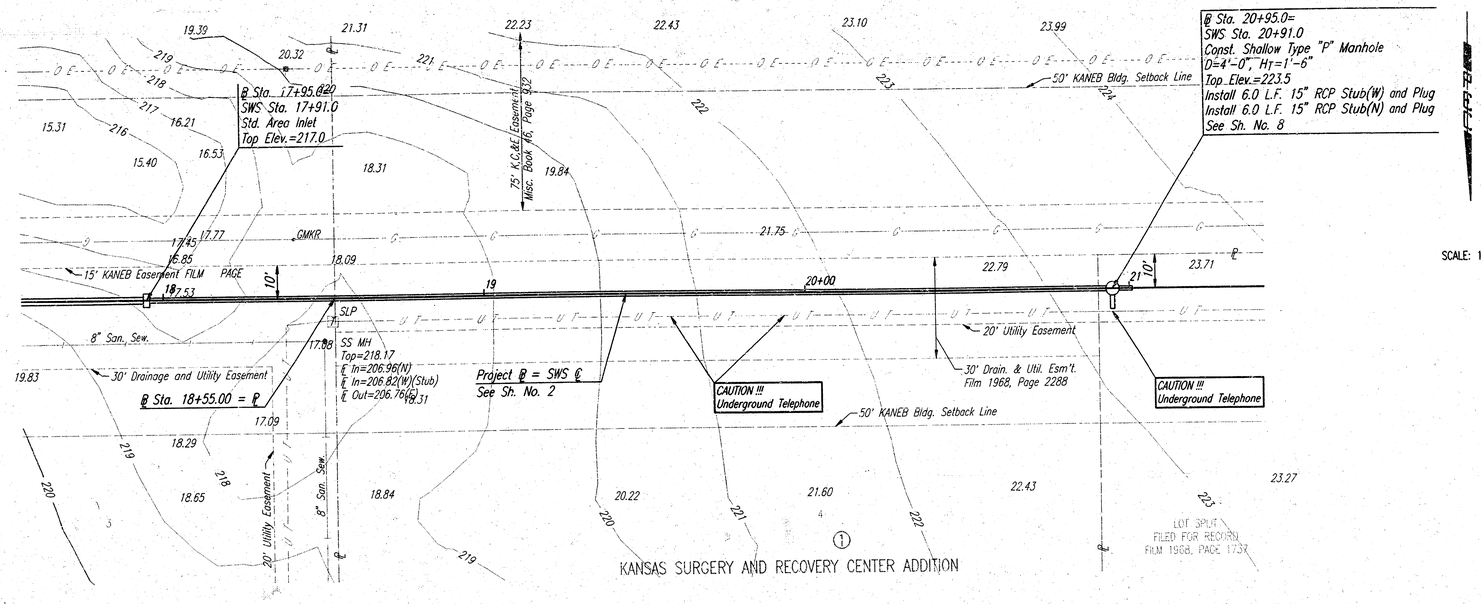


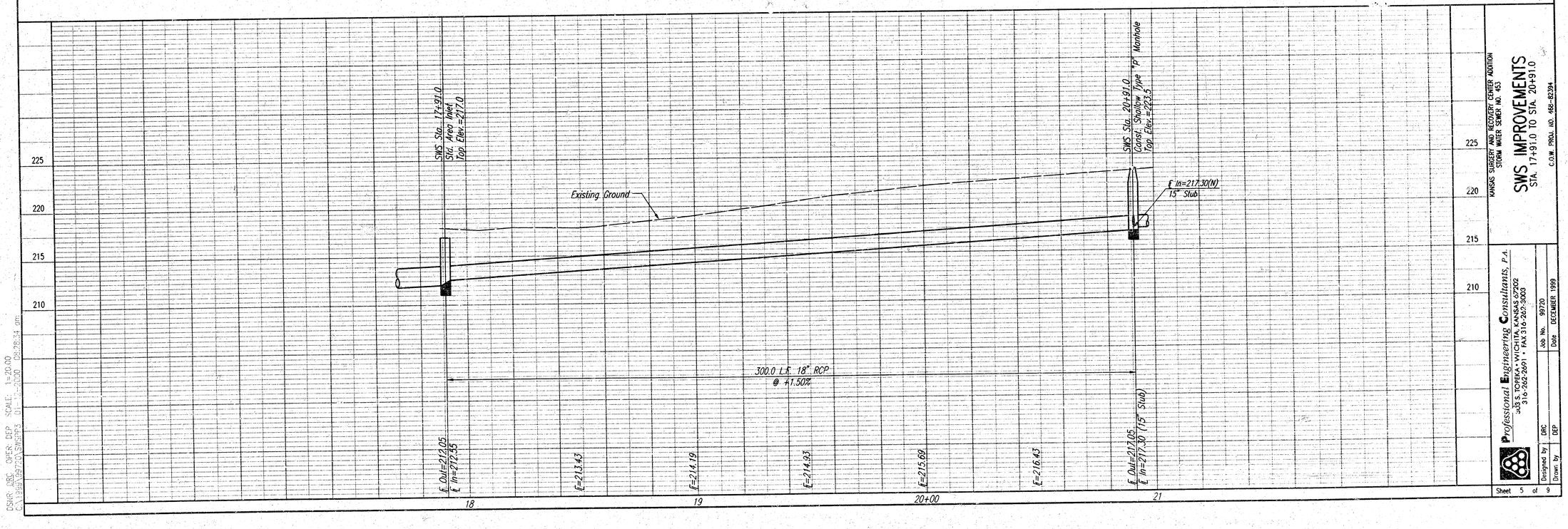


KANSAS SURGERY AND RECOVERY CENTER ADDITION
STORM WATER SEWER NO. 165

# SWS IMPROVEMENTS
STA. 17+91.0 TO STA. 20+91.0

C.O.W. PROJ. NO. 468-82394


Professional Engineering Consultants, P.A.
303 S. TOPEKA • WICHITA, KANSAS 67202
316-262-2691 • FAX 316-265-3003


Designed by: DRC
Drawn by: DEP
Job No. 99720
Date DECEMBER 1999

Sheet 5 of 9

DSAR: DRC OPER: DEP SCALE: 1=20.00
C:\1999\99720\SWSPP3 01-2-2000 08:28:34 am

| PROJECT NO. | SHEET NO. | TOTAL SHEETS |
|---|---|---|
| 468-82394 | 6 | 9 |

## GENERAL NOTES

CONCRETE SHALL BE C.O.W. STANDARD PAVING MIX. ALL EXPOSED EDGES SHALL BE FINISHED WITH AN APPROVED EDGING TOOL.

REINFORCING STEEL SHALL BE GRADE 60, A.S.T.M. A615. ALL DIMENSIONS RELATIVE TO PLACEMENT OF REINFORCING ARE TO THE CENTERLINE OF BARS UNLESS OTHERWISE NOTED.

INLET CASTINGS SHALL BE MANUFACTURED USING DUCTILE IRON CONFORMING TO ASTM A536-80 GRADE 65-45-12. DIMENSIONS AND WEIGHTS SHOWN ON THE DETAILED DRAWINGS SHALL BE CONSIDERED AS MINIMUM REQUIREMENTS AND ANY DEVIATIONS FROM THE DIMENSIONS SHOWN MUST BE SPECIFICALLY APPROVED. THE FINISHED CASTINGS SHALL BE OF UNIFORM QUALITY, FREE FROM BLOWHOLES, POROSITY, HARD SPOTS, SHRINKAGE DISTORTIONS OR OTHER DEFECTS.

INLET FLOOR SHALL BE SHAPED WITH UNREINFORCED CONCRETE (8 SACK SAND MIX) TO CREATE FLOW CHANNELS AND TO INCREASE HYDRAULIC EFFICIENCY SUCH THAT THE INLET WILL BE SELF CLEANING BETWEEN ALL INLET AND/OR OUTLET PIPES.

PIPES ENTERING EXISTING STRUCTURE SHALL BE CENTERED ON INSIDE FACE OF WALL.

ALL EXPOSED STRUCTURAL STEEL SHALL BE PAINTED WITH A COAT OF INORGANIC ZINC PRIMER AND THEN WITH A TOP COAT OF OR A FIELD COAT OF ORGANIC ZINC, EACH COAT TO BE 3 TO 4 MILS. STRUCTURAL STEEL USED TO FABRICATE THE SPECIAL AREA INLET FRAME SHALL COMPLY WITH A.S.T.M. A36. WELDING SHALL COMFORM TO THE STRUCTURAL WELDING CODE A.W.S. D1.1-88.

AREA INLETS (STANDARD) SHALL BE MEASURED AND PAID FOR AT THE CONTRACT UNIT PRICE BID PER EACH. THIS SHALL BE CONSIDERED FULL COMPENSATION FOR ALL EXCAVATION, BACKFILLING, MATERIALS, LABOR, CONNECTION TO EXISTING STRUCTURES (IF REQUIRED), EQUIPMENT, TOOLS, AND INCIDENTALS NECESSARY TO COMPLETE THE WORK.

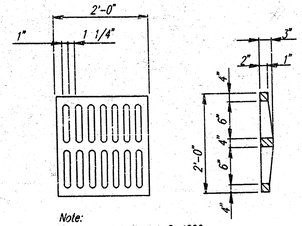


Note:
Grate shall be Neenah R-4826 or approved equal.

GRATE DETAIL
(Wt.=190 lbs.)
(2 Required)

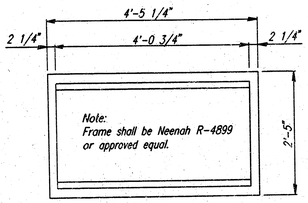


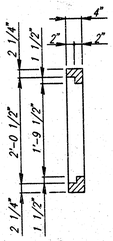


FRAME DETAIL
(Wt.=440 lbs.)

Note:
Frame to mate with 2 Neenah R-4826 Grates or approved equal.

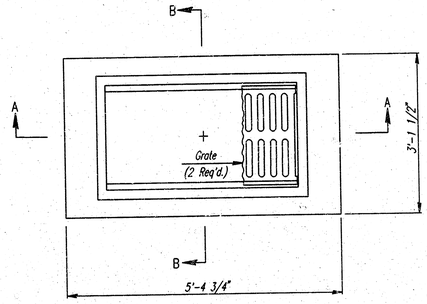


PLAN

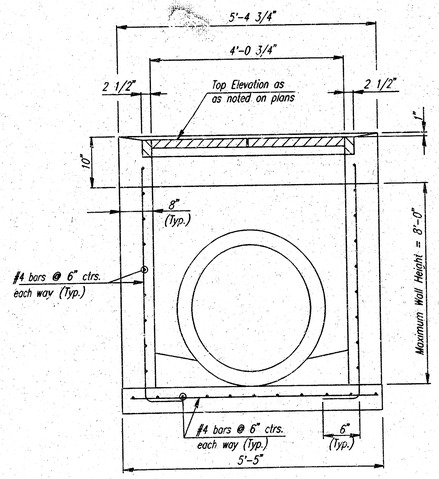


SECTION A-A

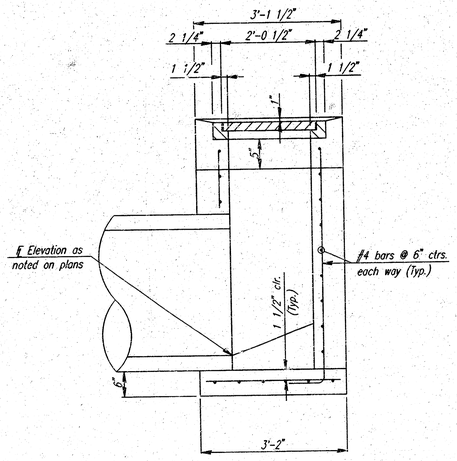


SECTION B-B

STANDARD AREA INLET

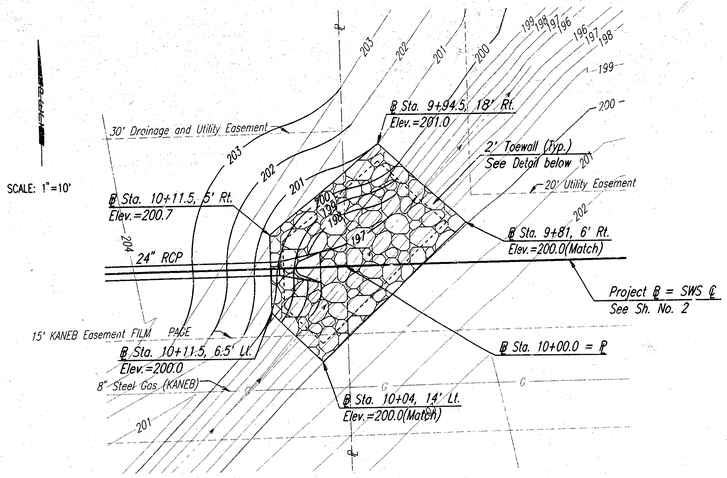


RIPRAP DETAIL

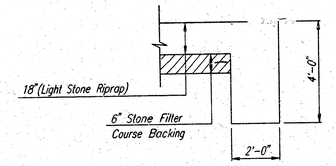


TYPICAL SECTION THRU TOEWALL
NO SCALE

NOTES

1. ALL RIPRAP FOR THIS PROJECT SHALL BE NATURAL STONE. NEITHER BROKEN CONCRETE, FABRIC ENVELOPE, NOR PREMIXED DRY PACKAGED CONCRETE BAG ALTERNATES WILL BE ALLOWED.
2. TOEWALLS SHALL BE INSTALLED ALONG ALL EDGES OF STONE RIPRAP.
3. GROUTING OF THE SURFACE OF THE RIPRAP SHALL NOT BE PERFORMED. GROUTING OF THE TOEWALLS SHALL BE PERFORMED PER CITY SPECIFICATIONS.

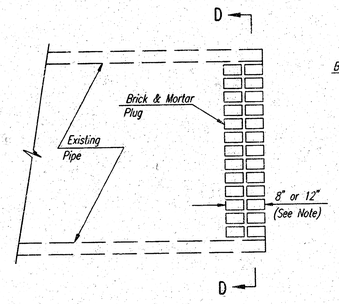


ELEVATION

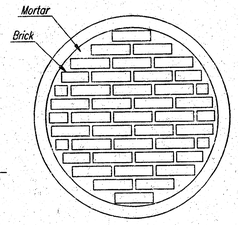


SECTION D-D

PIPE PLUGGING DETAIL

NOTE: PIPE PLUGS SHALL BE CONSTRUCTED OF BRICK MASONRY, WITH CONSTRUCTION REQUIREMENTS AND MATERIALS CONFORMING TO THE SAME REQUIREMENTS AS SPECIFIED FOR MANHOLE CONSTRUCTION ON SH. NO. 13. PIPES HAVING DIAMETERS OF 18" OR SMALLER SHALL BE PLUGGED WITH 8" THICK PLUGS. PIPES HAVING DIAMETERS LARGER THAN 18" SHALL BE PLUGGED WITH 12" THICK PLUGS.
THE CONSTRUCTION OF PIPE PLUGS SHALL NOT BE PAID FOR DIRECTLY, BUT SHALL BE CONSIDERED SUBSIDIARY.

KANSAS SURGERY AND RECOVERY CENTER ADDITION
STORM WATER SEWER NO. 453

# MISCELLANEOUS DRAINAGE DETAILS


Professional Engineering Consultants, P.A.
303 S. TOPEKA • WICHITA, KANSAS 67202
316-262-2691 • FAX 316-262-3003


| Designed by | DRC | Checked by | |
|---|---|---|---|
| Drawn by | DEP | Date DECEMBER 1999 | Job No. 99720 |


I:\ENG_DOC OPER. DEP SCALE: 1=10.00
CAD\1999\99720.INF\DTL 01-11-2000 01:30:10 pm

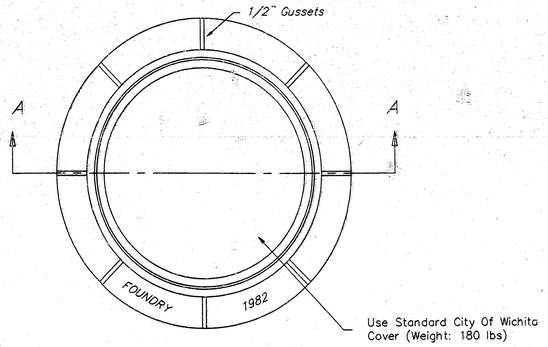


TOP VIEW

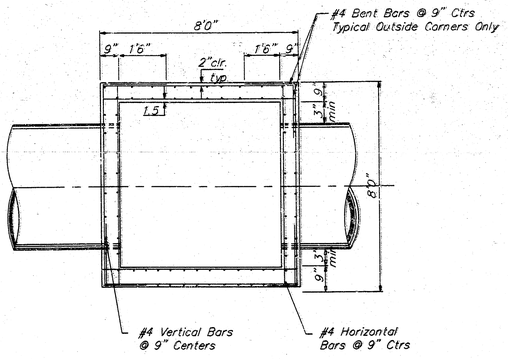


NOTE:
Bend Bars Not More Than 8" to Clear Pipes, or Cut Bars 2" Clear of Pipe, as Necessary.

SECTION B–B

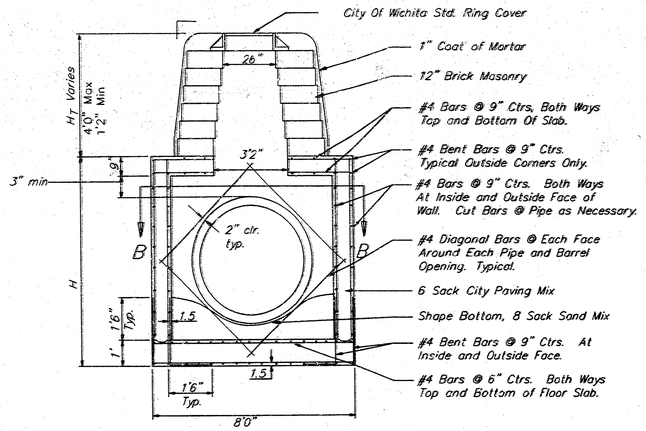


REINFORCED CONCRETE MANHOLE
STACK 2.33' TO 4'0"

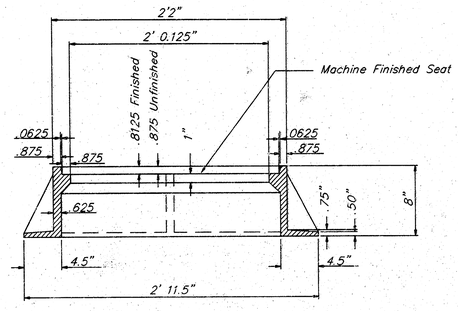


SECTION A–A

MANHOLE FRAME
Weight: 240 Lbs.

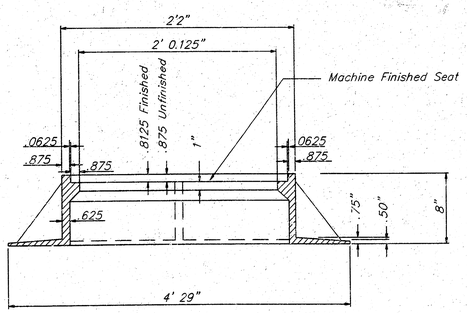


WIDE FLANGE RING
Weight: 705 Lbs.

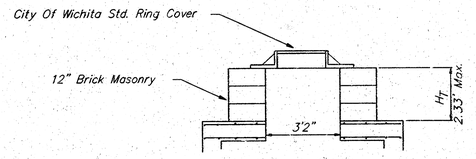


MANHOLE STACK LESS THAN 2.33'

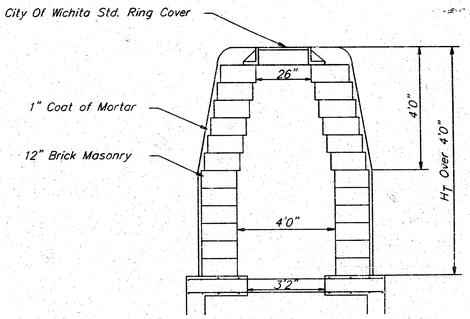


MANHOLE STACK OVER 4'0"

DSNR: DRC OPER: DEP SCALE: 1=1.00
O:\1999\99720\RCMHDTLS 11-17-1999 10:11:09 am

THE CITY OF WICHITA
CITY ENGINEER'S OFFICE
CITY HALL - SEVENTH FLOOR
455 NORTH MAIN STREET
WICHITA, KANSAS 67202
(316) 268-4501
(316) 268-4114 FAX

# REINFORCED CONCRETE MANHOLE

M. E. LINDEBAK P.E. - CITY ENGINEER

| PROJECT NUMBER | INDEX CODE |
|---|---|
| 468-82394 | ——— |
| DATE: DEC 99 | SHEET 7 OF 9 |

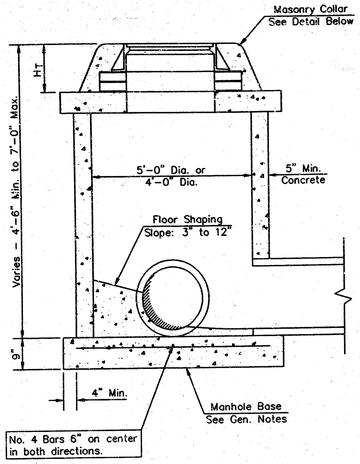


SHALLOW TYPE "P" MANHOLE

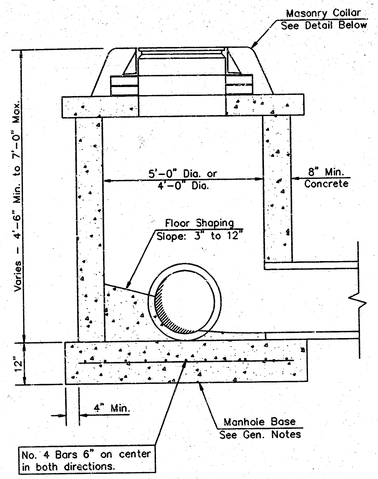


SHALLOW TYPE "C" MANHOLE

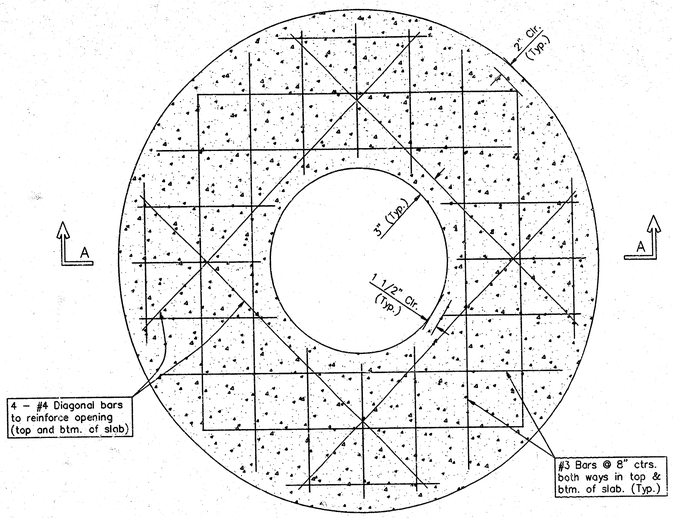


PLAN

## GENERAL NOTES

1. Mortar used in masonry construction shall contain 8 sacks of cement per cubic yard. Concrete used in manhole bases shall conform to the requirements of concrete for concrete pavement construction as specified in the city standard paving specifications using city concrete cement mix without air entraining admixture. Mortar shall be placed around the manhole ring as shown on the drawings when manholes are constructed in unpaved areas. Manholes constructed where pipe sizes are smaller than 24" shall have an inside diameter of 4'. Manholes constructed where pipe sizes are 24" or larger shall have an inside diameter of 5'. Completed manhole shall be without leaks and water tight.

2. Reinforcing steel shall be installed in the manhole bases and shall consist of no. 4 bars placed on 6" centers in both directions. The manhole base reinforcement shall be placed 6" above the bottom of the manhole base. All costs for furnishing and installing reinforcing steel shall be included in the unit price bid for the manhole.

3. The floors of all manholes shall be shaped with flow channels such that the manholes will be self cleaning ~~and free of areas where solids could be deposited as sewage flows through the manhole from all inlet pipes to the outlet pipe.~~ Flow channels shall be formed to match the bottom halves of the inflowing pipes and the outflowing pipe as shown by the drawings. Manhole floors shall have slopes of 3 inches per foot in the areas outside of the flow channels sloped toward the flow channels. ~~Pipes laid through manholes shall have the top half removed to neat lines for the full inside diameter of the manhole. Manhole floors shall then be shaped around the bottom half of the pipe which forms the flow channel.~~

4. Pipes installed within the excavation made for the manhole shall be cradled with concrete to the limits of the manhole excavation. When clay pipe is used, the cradle shall extend to the first joint outside the manhole. The cradle shall be terminated at the clay pipe joint in a manner which will maintain the flexibility of the joint. Cost of cradle within manhole excavation or to clay pipe joints adjacent to manhole shall be included in the unit price bid for the manhole.

5. Manhole cover castings and manhole frame castings shall conform to the requirements as indicated in the standard specifications and as shown in the standard detail drawings.

6. The crowns of inflowing pipes shall never be set lower than the crown of the outflowing pipe.

7. Standard shallow manholes type "P" and "C" shall be paid for at the unit price bid per each for the type and diameter indicated. All standard shallow manhole diameters will be 4' unless indicated otherwise.

8. All brick used in manhole construction shall meet Grade SW of ASTM C652 or C62-87.

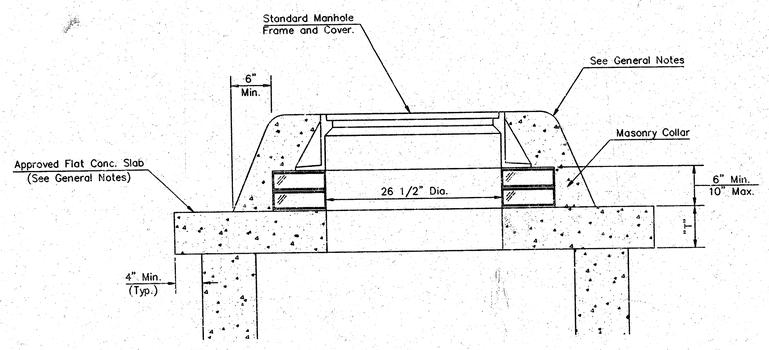


MASONRY COLLAR DETAIL

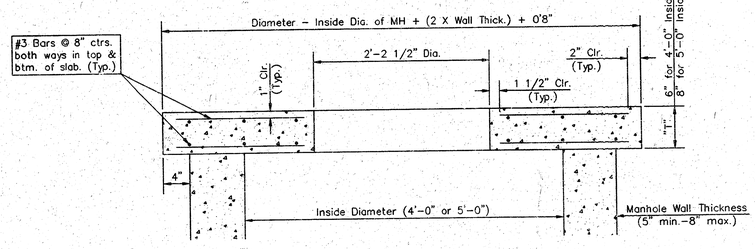


SECTION A–A

FLAT CONCRETE SLAB DETAILS


THE CITY OF WICHITA

CITY ENGINEER'S OFFICE
CITY HALL – SEVENTH FLOOR
455 NORTH MAIN STREET
WICHITA, KANSAS 67202
(316) 268-4501
(316) 268-4114 Fax


**SHALLOW MANHOLES**

**TYPE 'P' & 'C'**

M. E. LINDEBAK P.E. – CITY ENGINEER

| PROJECT NUMBER | INDEX CODE |
|---|---|
| 468-82394 | XXXXXX |
| DATE: DEC 99 | SHEET 8 OF 9 |


DSNR DEC OPER DEP SCALE: 1=1.00
Q:\1999\99720\SHLWMHPC 01-11-2000 01:30:46 pm

# MANHOLE FRAME AND COVER DETAIL

ADOPTED AS STANDARD DESIGN BY
CITY OF WICHITA, KANSAS

MANHOLE COVER
Weight = 180 Lbs.

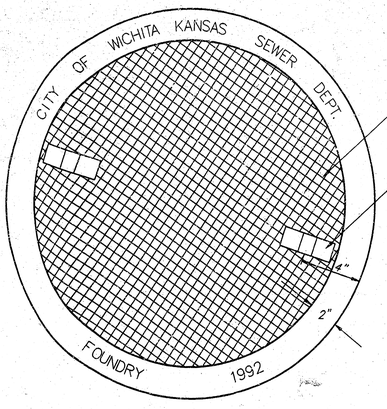


TOP VIEW

PICKHOLE DETAIL

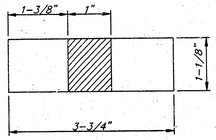


TOP VIEW

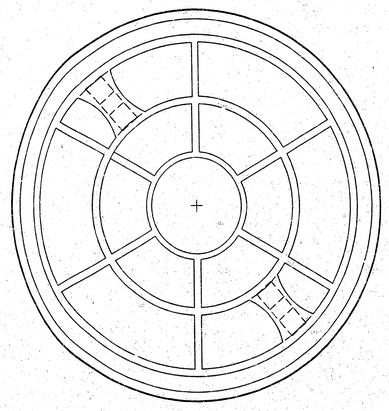

BOTTOM VIEW

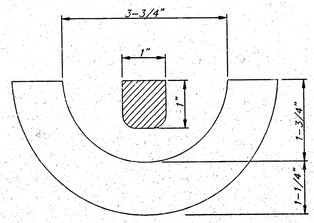


SECTION VIEW

MANHOLE FRAME
Weight = 240 Lbs.

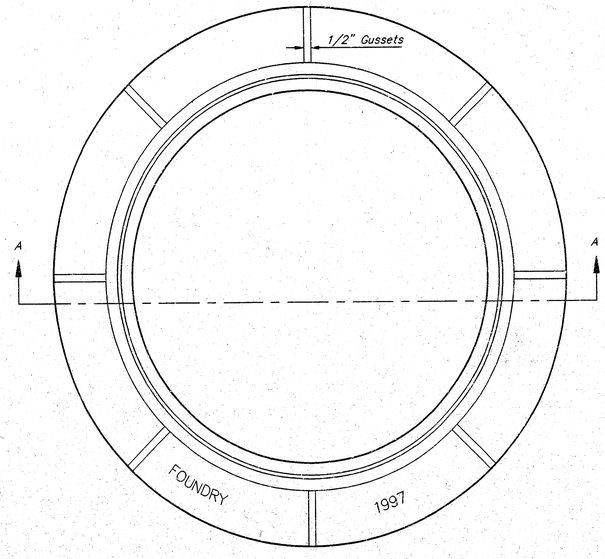


TOP VIEW

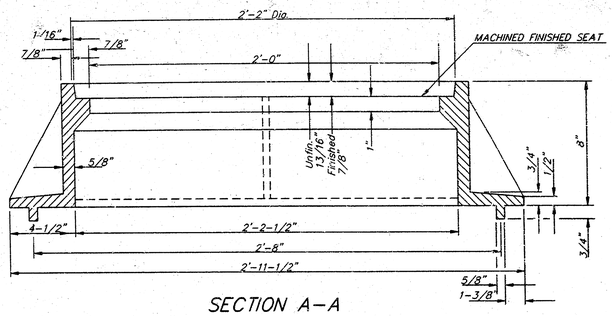


SECTION A-A
MUD RING

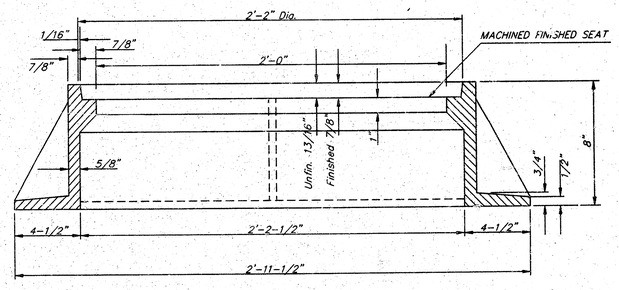


SECTION A-A

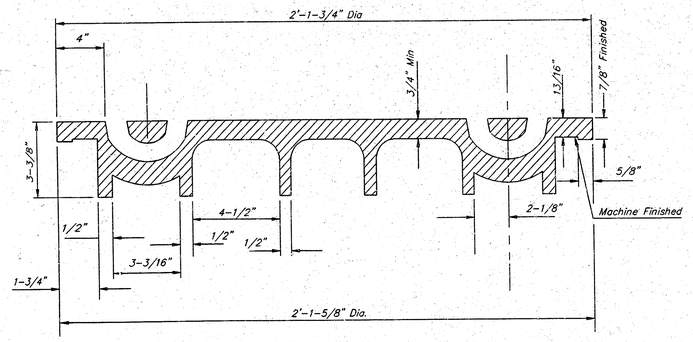


SECTION VIEW

## GENERAL NOTES

1. MANHOLE CASTINGS SHALL BE MANUFACTURED USING GOOD QUALITY GRAY IRON CONFORMING TO CLASS 30 OF A.S.T.M. DESIGNATION A-48. DIMENSIONS AND WEIGHTS SHOWN ON THE DETAILED DRAWINGS SHALL BE CONSIDERED AS MINIMUM REQUIREMENTS AND ANY DEVIATIONS FROM THE DIMENSIONS SHOWN MUST BE SPECIFICALLY APPROVED. THE FINISHED CASTINGS SHALL BE OF UNIFORM QUALITY, FREE FROM BLOWHOLES, POROSITY, HARD SPOTS, SHRINKAGE DISTORTIONS OR OTHER DEFECTS.

2. MANHOLE CASTINGS SHALL WEIGH A MINIMUM OF 180 POUNDS ON THE SOLID COVER AND 240 POUNDS ON THE MANHOLE RING. THIS IS A TOTAL OF 420 POUNDS ON A RING AND COVER SET. CASTINGS WEIGHING LESS THAN THE MINIMUM SPECIFICATIONS WILL NOT BE ACCEPTED.

3. MANHOLE CASTINGS SHALL BE MANUFACTURED SUCH THAT A COVER MANUFACTURED BY ANY ONE FOUNDRY WILL FIT INTERCHANGEABLY INTO A FRAME MANUFACTURED BY ANOTHER FOUNDRY AND STILL MEET ALLOWABLE CLEARANCES AND NON-ROCKING REQUIREMENTS. THIS WILL REQUIRE MANUFACTURING OF THE MATCHING FACES ON THE COVER AND THE FRAME TO CLOSE TOLERANCES.

4. THE OUTSIDE CIRCUMFERENCE OF THE VERTICAL FACE OF THE COVER AND THE INSIDE CIRCUMFERENCE OF THE VERTICAL FACE IN THE FRAME RECESS SHALL BE MANUFACTURED TO TOLERANCES SUCH THAT THE CLEARANCE BETWEEN THE COVER AND FRAME WILL NOT EXCEED 1/8" AT ANY POINT AROUND THE CIRCUMFERENCE OF THE COVER. THE SEATING SURFACES BETWEEN THE COVER AND FRAME SHALL BE MACHINED SUCH THAT THESE SEATING SURFACES SHALL MAKE FULL CONTACT FOR THEIR FULL CIRCUMFERENCE TO PRECLUDE THE COVER FROM ROCKING IN THE FRAME.

5. THE MANHOLE FRAME AND COVER SHALL BE MARKED WITH LETTERING INDICATING THE NAME OF THE MANUFACTURER AND THE YEAR WHEN THE COVER OR FRAME WAS CAST. THE COVER SHALL BE FURTHER IDENTIFIED WITH REGARDS TO OWNERSHIP USING LETTERS AT LEAST 1 INCH IN HEIGHT. THIS IDENTIFICATION SHALL BE "CITY OF WICHITA SEWER DEPARTMENT". THE WORD DEPARTMENT MAY BE ABBREVIATED. THE TEXTURE OF THE TOP SURFACE OF THE COVER SHALL BE MANUFACTURED IN A CHECKERED PATTERN DESIGN AS INDICATED ON THE DRAWINGS. SMOOTH BLOCKOUTS SHALL BE UTILIZED TO HIGHLIGHT THE LETTERING ON THE COVER SURFACE. THE TOTAL AREA OF SMOOTH SURFACE BLOCKOUT SHALL NOT EXCEED THE AREA AS INDICATED ON THE DRAWING. POSITIONING OF SMOOTH BLOCKOUTS AND LETTERING MAY VARY FROM THAT SHOWN ON THE DETAILED DRAWING.

DSNR: DRC OPER: DEP SCALE: 1=1.00
Q:\1999\99720\MHFRAMCV 11-17-1999 10:11:47 am


THE CITY OF WICHITA
CITY ENGINEER'S OFFICE
CITY HALL - SEVENTH FLOOR
455 NORTH MAIN STREET
WICHITA, KANSAS 67202
(316) 268-4501
(316) 268-4114 FAX


MANHOLE FRAME AND COVER

M. E. LINDEBAK P.E. - CITY ENGINEER

| PROJECT NUMBER | INDEX CODE |
|---|---|
| 468-82394 | XXXXXX |
| DATE | SHEET 9 OF 9 |
| DEC 99 | |


91-20-03-14