| SHEET NO. | TOTAL SHEETS |
|---|---|
| 1 | 12 |

# CITY OF WICHITA, KANSAS
# MICHAEL E. LINDEBAK, P.E., CITY ENGINEER

# STORM WATER SEWER NO. 462

IN

# NORTHRIDGE LAKES

CITY OF WICHITA PROJECT NO. 468-76-245-82495-000-000-001
INDEX NO. 750695

INDEX OF SHEETS


1. TITLE SHEET
2. PLAT
3. SWS PLAN & PROFILE-LINE NO. 1
4. SWS PLAN & PROFILE-LINE NO. 2
5. SWS PLAN & PROFILE-LINE NO. 3
6. SWS PLAN & PROFILE-LINE NO. 4
7. INLET TYPE C DETAILS
8. STD. TYPE 1A CURB INLET (L=11'-4")
9. STD. REINFORCED CONCRETE MANHOLE
10. RIPRAP DETAILS
11. SPECIAL TYPE 1A INLET TOP DETAILS
12. MANHOLE FRAME AND COVER DETAIL


## PROJECT SURVEY CONTROL

CITY OF WICHITA VERTICAL DATUM

BM AA 60D STEP SPIKE IN PP 14' E. OF THE W. EDGE OF HAMMER HEAD AT N. END OF MEADOW PASS COURT.
ELEV.=163.27

BM BB: 60D STEP SPIKE IN 12" LOCUST ON S. LINE OF PLAT, 85' W. OF THE SE CORNER OF LOT 33 BLOCK 3.
ELEV.=166.60

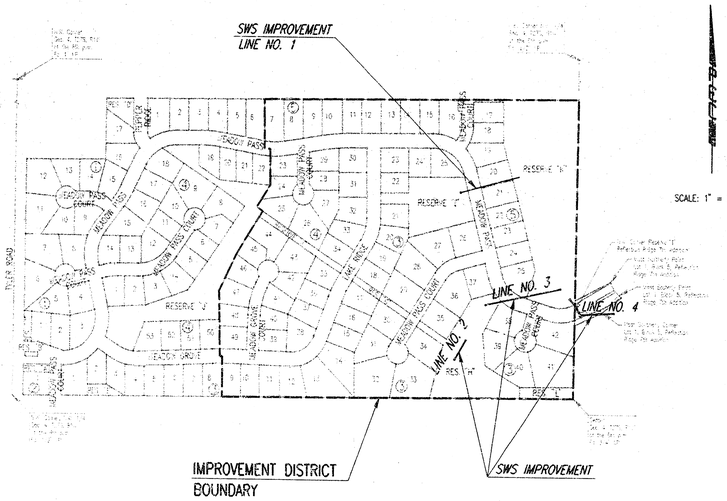


SCALE: 1" = 300'

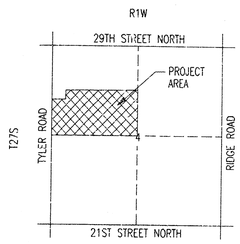


VICINITY MAP

## GENERAL NOTES

UNDERGROUND UTILITY SERVICE LINES AND OVERHEAD UTILITY POLE LINES ARE TO BE ADJUSTED AS NECESSARY BY OTHERS PRIOR TO CONSTRUCTION UNLESS THE PLANS SPECIFICALLY CALL FOR THEIR ADJUSTMENT BY THE CONTRACTOR. EXISTING UTILITIES AND THEIR LOCATION, AS SHOWN ON THE PLANS, REPRESENT THE BEST INFORMATION OBTAINABLE FOR DESIGN. LOCATION INFORMATION HAS BEEN OBTAINED FROM THE VARIOUS UTILITY COMPANIES AND IS EITHER FROM COMPANY RECORD DRAWINGS OR COMPANY PROVIDED FIELD LOCATIONS. THE CONTRACTOR WILL BE REQUIRED TO WORK AROUND EXISTING UTILITIES WITHIN THE RIGHT-OF-WAY WHICH DO NOT CONFLICT WITH PROPOSED CONSTRUCTION. CONTRACTOR SHALL SATISFY HIMSELF OF SUBSURFACE CONDITIONS PRIOR TO BIDDING.

TREES AND SHRUBS IN PUBLIC RIGHT-OF-WAY WHICH ARE IN DIRECT CONFLICT WITH PROPOSED NEW CONSTRUCTION SHALL BE REMOVED BY THE CONTRACTOR WITH THE ENGINEER'S APPROVAL. TREES AND SHRUBS WHICH ARE NOT IN DIRECT CONFLICT WITH PROPOSED NEW CONSTRUCTION SHALL BE SAVED AND PROTECTED FROM DAMAGE.

RUBBLE FROM THE REMOVAL OF MISCELLANEOUS STRUCTURES SHALL BE DISPOSED OF ON SITES TO BE PROVIDED BY THE CONTRACTOR AND APPROVED AS NOTED.

ALL DISPOSAL SITES MUST BE APPROVED BY THE KANSAS DEPARTMENT OF HEALTH AND ENVIRONMENT. MATERIAL EITHER STOCKPILED OR DISPOSED OF IN A FLOOD PLAIN WOULD REQUIRE A KANSAS STATE BOARD OF AGRICULTURE PERMIT. ANY MATERIAL DUMPED IN WATERS OF THE UNITED STATES OR WETLANDS IS SUBJECT TO U.S. CORPS OF ENGINEERS PERMITTING REGULATIONS. ANY MATERIAL BURIED OR STOCKPILED BEYOND APPROVED CONSTRUCTION LIMITS WOULD REQUIRE ADDITIONAL ARCHOLOGICAL INVESTIGATIONS UNLESS BURIED IN A PREVIOUSLY APPROVED BORROW LOCATION.

EXCESS EXCAVATED MATERIAL AND EXCESS TOPSOIL SHALL BE STOCKPILED OR WASTED WITHIN THE PLAT LIMITS. THE CONTRACTOR SHALL CONTACT THE OWNER'S ENGINEER AT 262-2691 FOR INFORMATION PERTAINING TO THE ACCEPTABLE LOCATIONS FOR THE DISPOSITION OF EXCESS MATERIAL. WASTE MATERIAL SHALL BE GRADED SMOOTH AND SLOPED TO DRAIN. THIS WORK SHALL BE CONSIDERED SUBSIDIARY TO OTHER BID ITEMS.

CONTRACTOR SHALL PROVIDE A MINIMUM FORTY-EIGHT (48) HOUR ADVANCE NOTICE (EXCLUDING WEEKENDS AND HOLIDAYS) PRIOR TO BEGINNING ANY EXCAVATION, TO KANSAS ONE-CALL SYSTEM, A UTILITY LOCATION SERVICE, AT (316) 687-2470 TO REQUEST THE FOLLOWING UTILITY COMPANIES TO LOCATE ALL EXISTING LINES WITHIN THE PROJECT AREA: K.G.&E GAS, PEOPLES NATURAL GAS, K.G.&E. ELECTRIC, SOUTHWESTERN BELL TELEPHONE, MULTIMEDIA CABLEVISION, CITY OF WICHITA SEWER MAINTENANCE AND CITY OF WICHITA WATER DEPARTMENT.

THE CONTRACTOR SHALL BE RESPONSIBLE FOR PRESERVING PROPERTY IRONS. THE CONTRACTOR WILL BE REQUIRED TO RE-ESTABLISH ANY PROPERTY IRONS WHICH ARE DAMAGED OR DESTROYED BY HIS CONSTRUCTION OPERATIONS. SUCH IRONS SHALL BE RE-ESTABLISHED BY A LICENSED LAND SURVEYOR IN ACCORDANCE WITH STATE LAWS.

THE WATER DEPARTMENT SHALL FIELD LOCATE WATER VALVES ONE TIME DURING CONSTRUCTION WHEN REQUESTED BY THE CONTRACTOR. IT SHALL BE THE CONTRACTOR'S RESPONSIBILITY TO PRESERVE SUCH FIELD LOCATIONS DURING THE CONSTRUCTION PROCESS. WATER VALVES, WATER VALVE BOXES OR FIRE HYDRANTS DAMAGED DURING CONSTRUCTION SHALL BE REPAIRED BY THE CONTRACTOR AT HIS OWN EXPENSE.

THE CONTRACTOR SHALL ADJUST WATER VALVE BOXES AS DIRECTED BY THE ENGINEER. THIS WORK TO BE SUBSIDIARY TO OTHER BID ITEMS.

# OCTOBER 1995

Booked
6-4-96
MCG
D-296




PLANS PREPARED BY
PROFESSIONAL ENGINEERING CONSULTANTS, P.A.
ENGINEERS
WICHITA, KANSAS

usr/lusb/dgn: i:1995/95469/002/similite.dgn
date plotted: oct. 25, 1995
deliver to: brent remsberg

# NORTHRIDGE LAKES

## AN ADDITION TO WICHITA, SEDGWICK COUNTY, KANSAS

| PROJECT NO. | SHEET NO. | TOTAL SHEETS |
|---|---|---|
| 468-76-245-82485-000-000-001 | 2 | 12 |

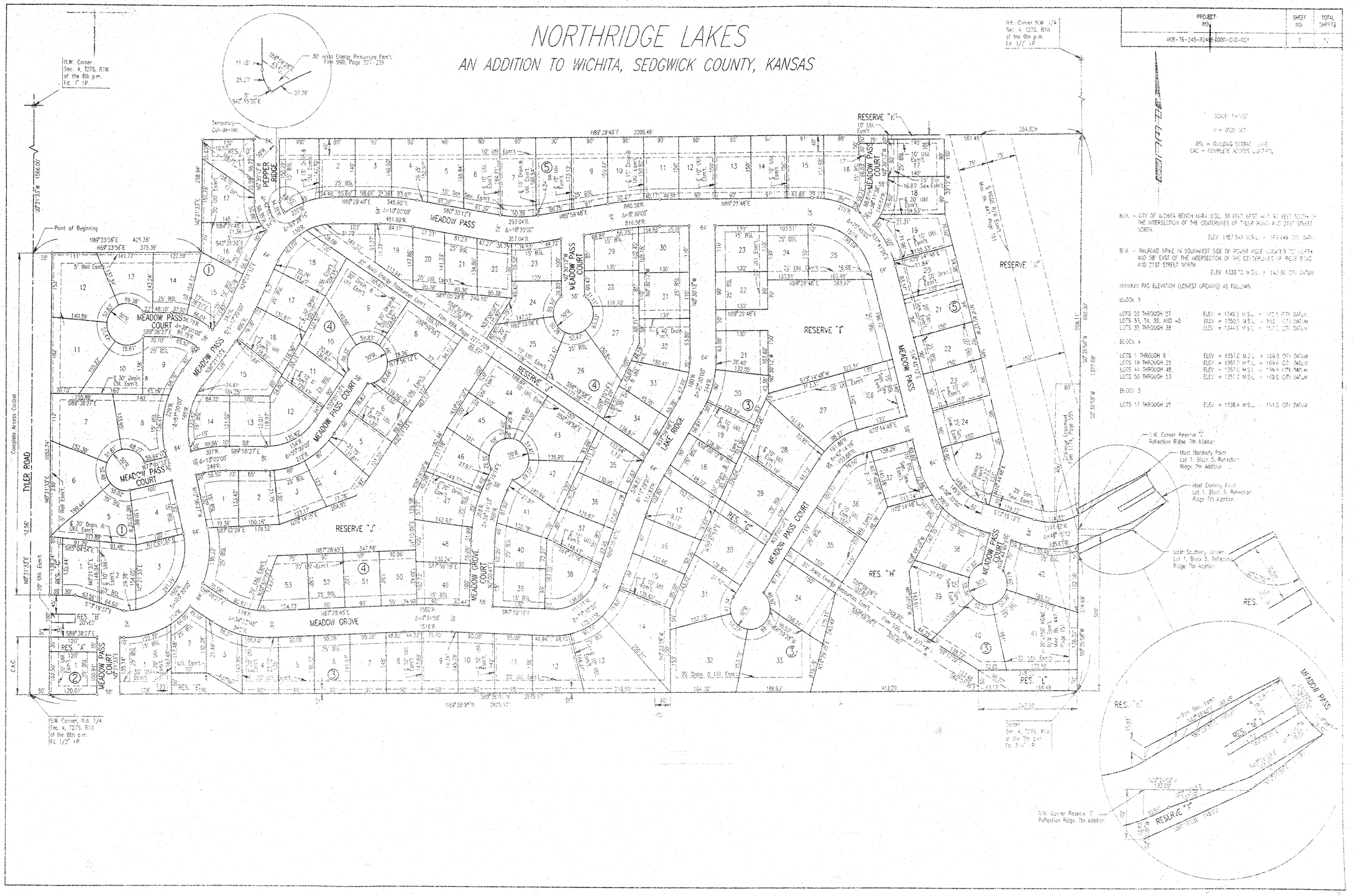


SCALE: 1"=100'

⊙ = IRON SET

BSL = BUILDING SETBACK LINE
CAC = COMPLETE ACCESS CONTROL

B.M. - CITY OF WICHITA BENCH MARK B'SC, 38 FEET WEST AND 90 FEET SOUTH OF THE INTERSECTION OF THE CENTERLINES OF TYLER ROAD AND 21ST STREET NORTH.

ELEV. 1357.349 M.S.L. = 169.949 CITY DATUM

B.M. - RAILROAD SPIKE IN SOUTHWEST SIDE OF POWER POLE LOCATED 70' NORTH AND 58' EAST OF THE INTERSECTION OF THE CENTERLINES OF RIDGE ROAD AND 21ST STREET NORTH

ELEV. 1330.70 M.S.L. = 143.30 CITY DATUM

MINIMUM PAD ELEVATION (LOWEST UPENING) AS FOLLOWS:

BLOCK 3

| | |
|---|---|
| LOTS 20 THROUGH 27 | ELEV. = 1349.5 M.S.L. = 162.1 CITY DATUM |
| LOTS 33, 34, 39, AND 40 | ELEV. = 1350.5 M.S.L. = 163 CITY DATUM |
| LOTS 35 THROUGH 38 | ELEV. = 1344.8 M.S.L. = 157.2 CITY DATUM |

BLOCK 4

| | |
|---|---|
| LOTS 1 THROUGH 9 | ELEV. = 1357.0 M.S.L. = 169.6 CITY DATUM |
| LOTS 19 THROUGH 25 | ELEV. = 1357.0 M.S.L. = 169.6 CITY DATUM |
| LOTS 44 THROUGH 48 | ELEV. = 1357.0 M.S.L. = 169.6 CITY DATUM |
| LOTS 50 THROUGH 53 | ELEV. = 1357.0 M.S.L. = 169.6 CITY DATUM |

BLOCK 5

| | |
|---|---|
| LOTS 17 THROUGH 25 | ELEV. = 1338.4 M.S.L. = 151.0 CITY DATUM |

usr/ustn/dgn:h995/95469/002/northdge.dgn
date plotted: oct 25,1995
deliver to: brent remsberg

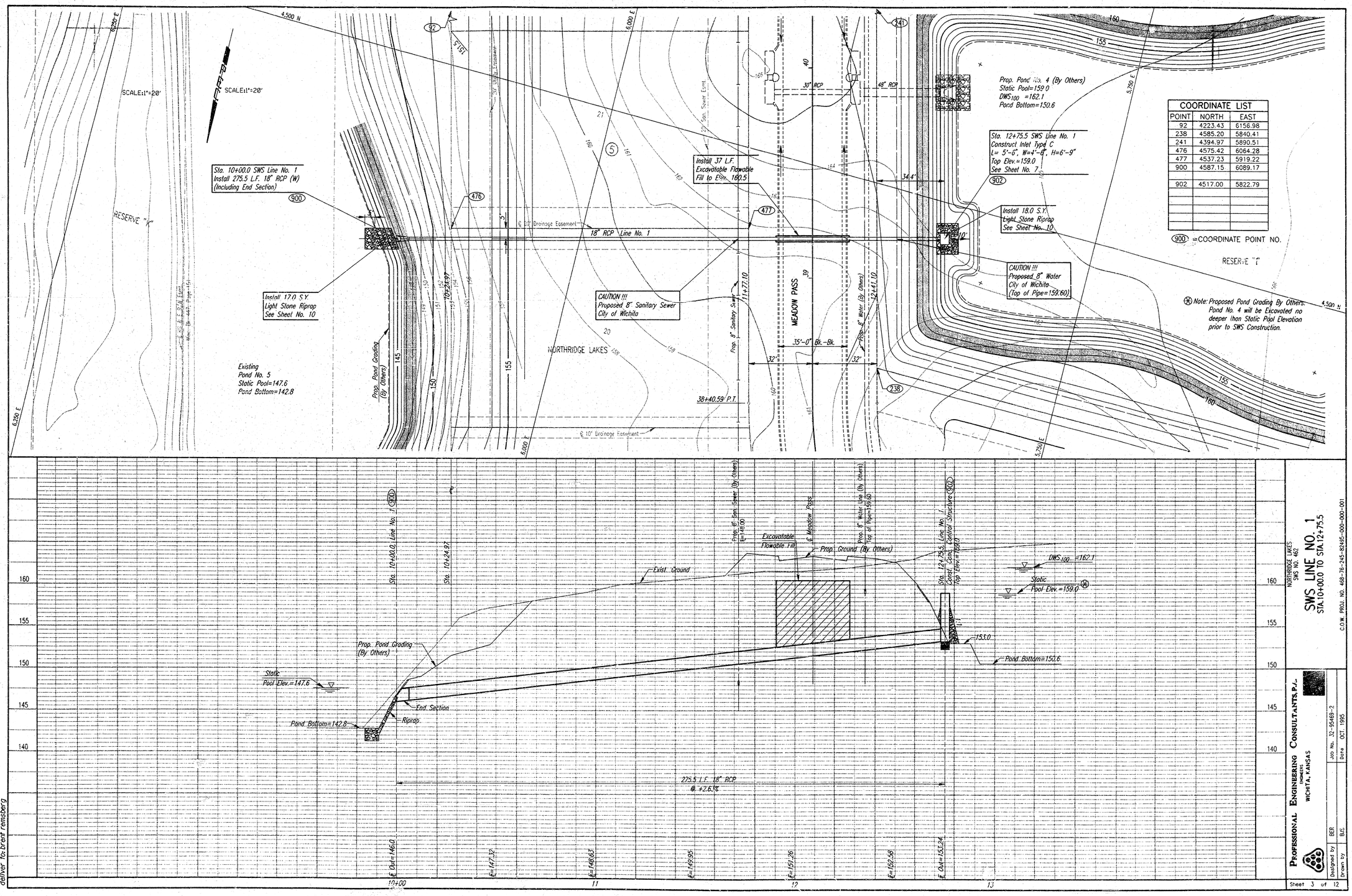





usr/ustn/dgn: 1995/95469/002/swspln1.dgn
date plotted: oct. 25, 1995
deliver to: brent remsberg

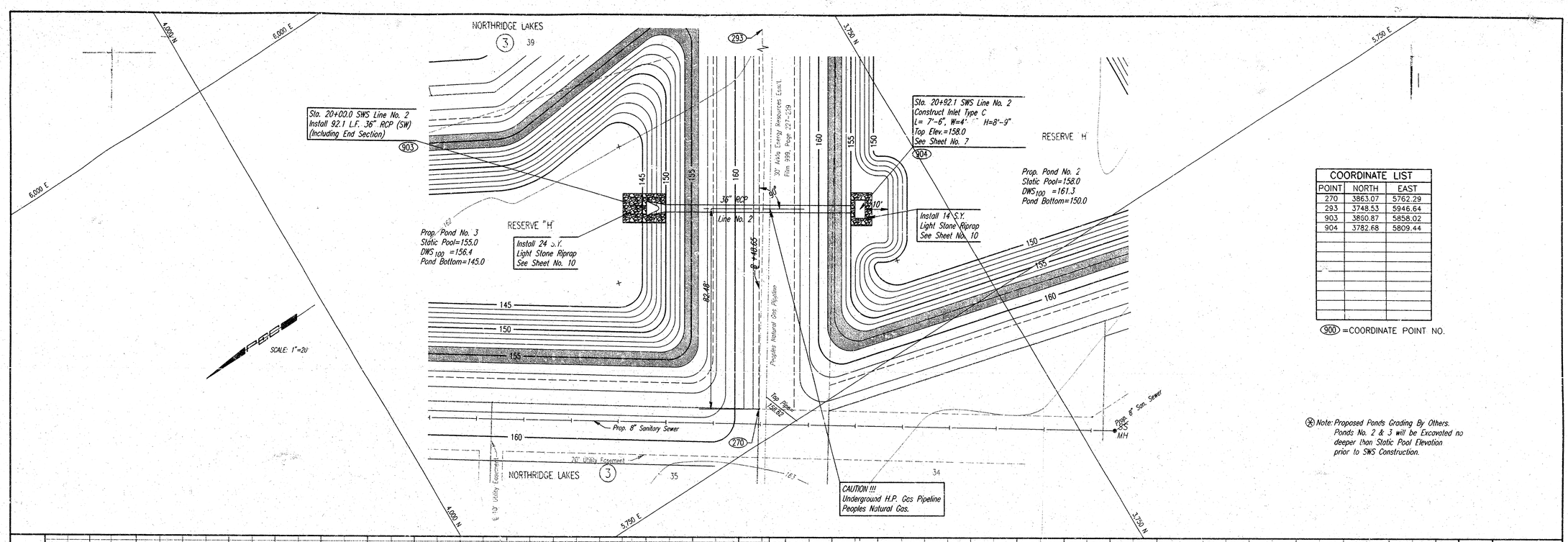


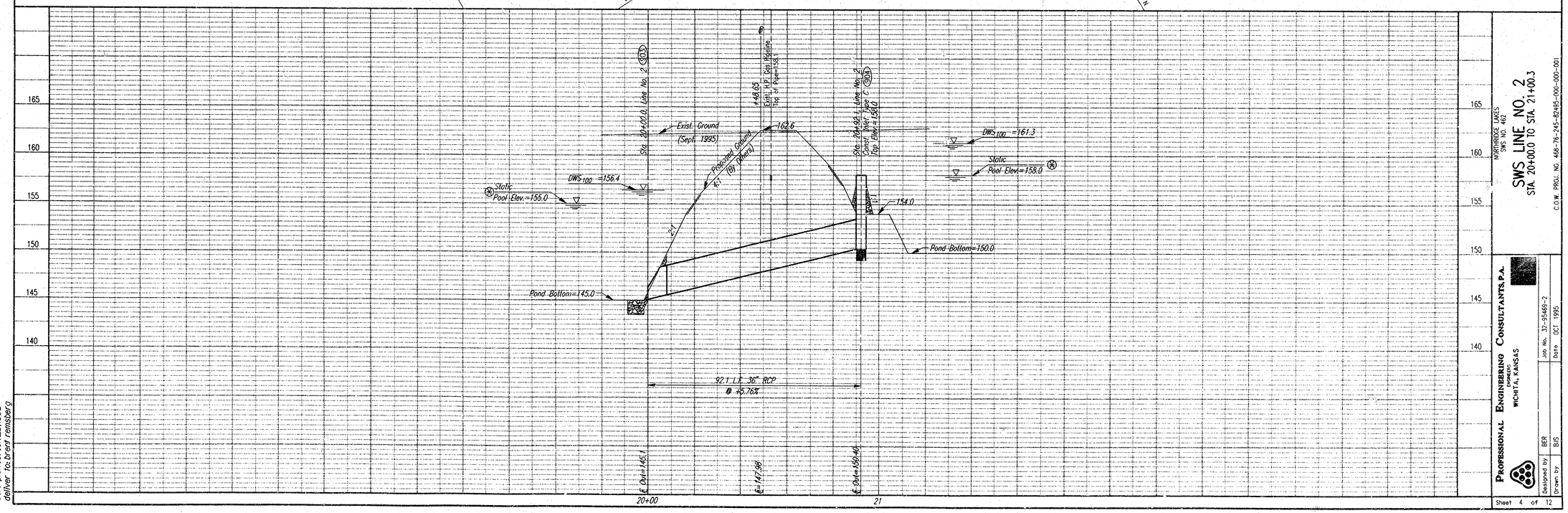


NORTHRIDGE LAKES
SWS NO. 402

# SWS LINE NO. 2
STA. 20+00.0 TO STA. 21+00.3

C.O.W. PROJ. NO. 468-76-245-82495-000-000-001

PROFESSIONAL ENGINEERING CONSULTANTS, P.A.
ENGINEERS
WICHITA, KANSAS

Designed by BER
Drawn by BJS
Job No. 32-95469-2
Date OCT 1995

Sheet 4 of 12

usr/ustn/dgn/1995/95469/002/swsplnt2.dgn
date plotted: oct 25, 1995
deliver to: brent remsberg

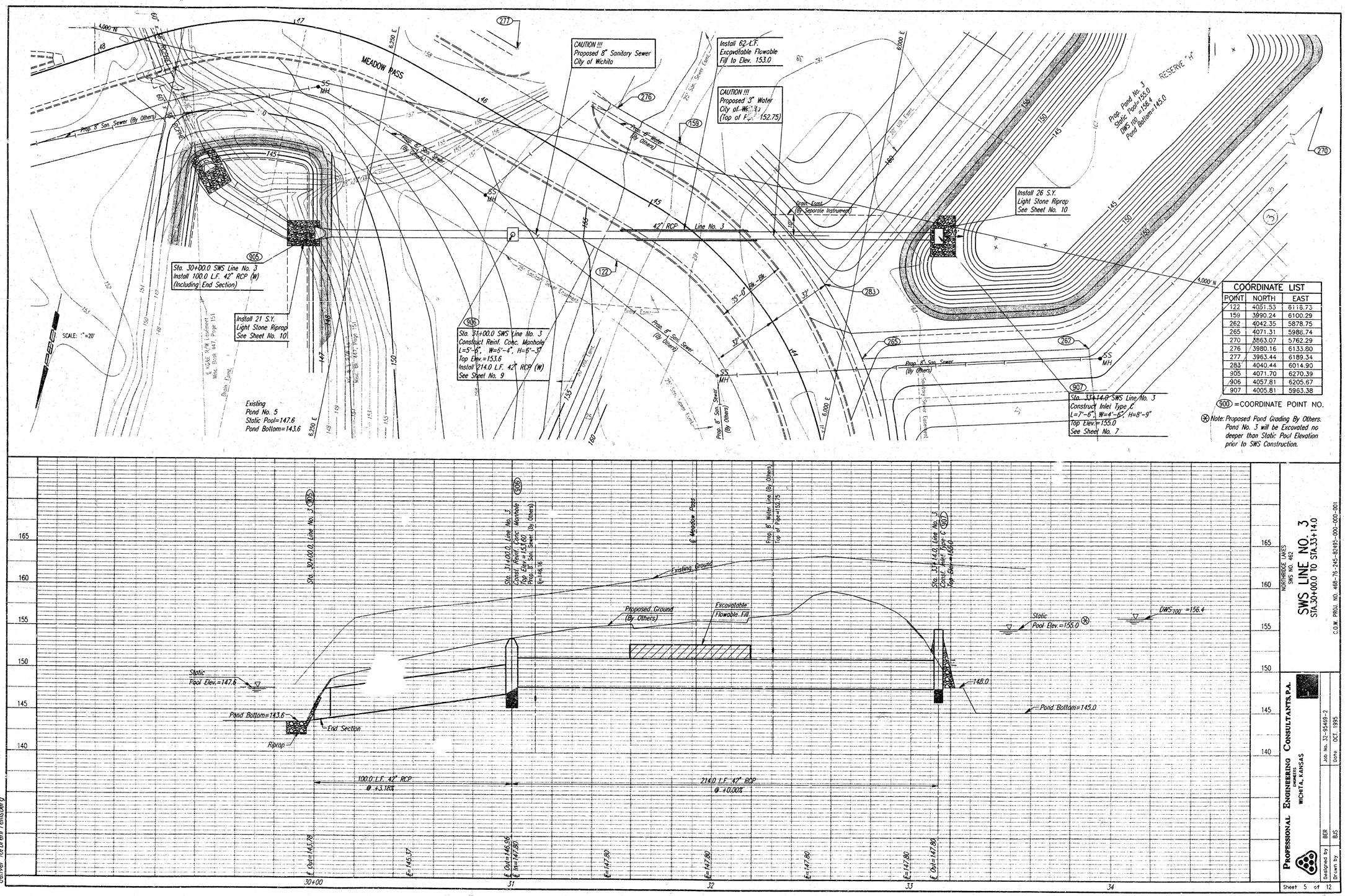


| COORDINATE LIST | | |
|---|---|---|
| POINT | NORTH | EAST |
| 122 | 4051.53 | 6118.73 |
| 159 | 3990.24 | 6100.29 |
| 262 | 4042.35 | 5878.75 |
| 265 | 4071.31 | 5988.74 |
| 270 | 3863.07 | 5762.29 |
| 276 | 3980.16 | 6133.80 |
| 277 | 3963.44 | 6189.34 |
| 283 | 4040.44 | 6014.90 |
| 905 | 4071.70 | 6270.39 |
| 906 | 4057.81 | 6205.67 |
| 907 | 4005.81 | 5963.38 |

(900) = COORDINATE POINT NO.

Ⓧ Note: Proposed Pond Grading By Others. Pond No. 3 will be Excavated no deeper than Static Pool Elevation prior to SWS Construction.




NORTHRIDGE LAKES
SWS NO. 462

# SWS LINE NO. 3
STA.30+00.0 TO STA.33+14.0

C.O.W. PROJ. NO. 468-76-745-82495-000-000-001

PROFESSIONAL ENGINEERING CONSULTANTS P.A.
WICHITA, KANSAS

Designed by BER
Drawn by BJS
Job No. 32-35469-2
Date OCT. 1995

Sheet 5 of 12

usr/ustn/dgn.1995/95469/002/swsplnhdgn
date plotted oct. 25, 1995
deliver to brent reinsberg

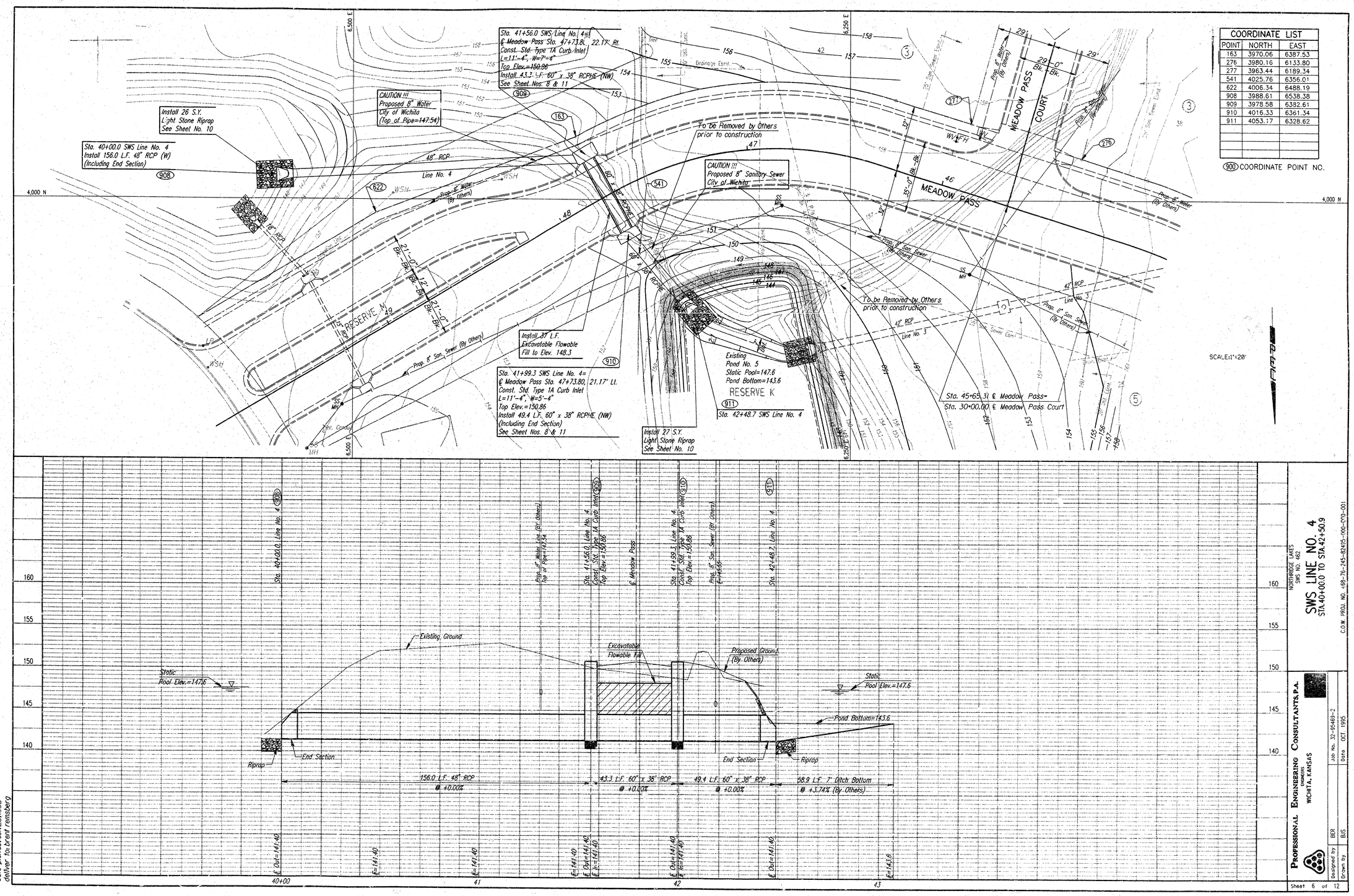


| COORDINATE LIST | | |
|---|---|---|
| POINT | NORTH | EAST |
| 163 | 3970.06 | 6387.53 |
| 276 | 3980.16 | 6133.80 |
| 277 | 3963.44 | 6189.34 |
| 541 | 4025.76 | 6356.01 |
| 622 | 4006.34 | 6488.19 |
| 908 | 3988.61 | 6538.38 |
| 909 | 3978.58 | 6382.61 |
| 910 | 4016.33 | 6361.34 |
| 911 | 4053.17 | 6328.62 |

(900) COORDINATE POINT NO.




NORTHRIDGE LAKES
SWS NO. 462

# SWS LINE NO. 4
STA.40+00.0 TO STA.42+50.9

C.O.W. PROJ. NO. 468-76-245-82435-000-000-001

PROFESSIONAL ENGINEERING CONSULTANTS, P.A.
WICHITA, KANSAS

| | |
|---|---|
| Designed by | BER |
| Drawn by | BJS |
| Job No. | 32-95469-2 |
| Date | OCT 1995 |

Sheet 6 of 12

usr/ustn/dgn/1995/95469/002/swsplnk.dgn
date plotted: oct. 25, 1995
deliver to: brent reinsberg

| SHEET NO. | TOTAL SHEETS |
|---|---|
| 7 | 12 |

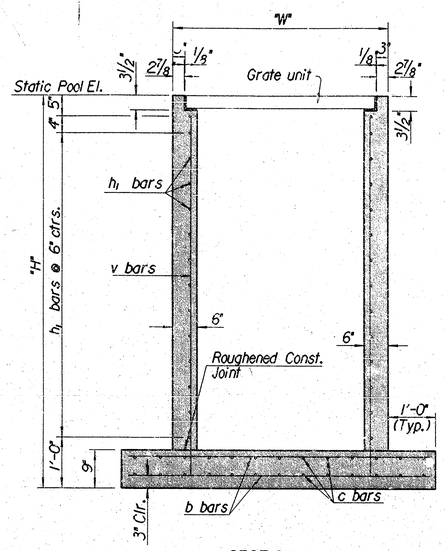


SECTION A-A

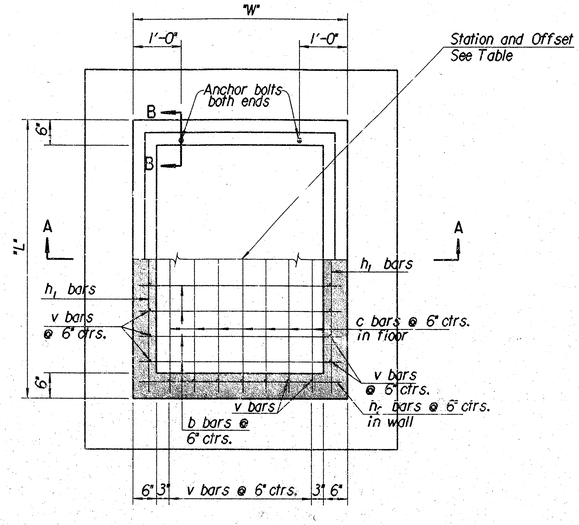


PLAN SECTION

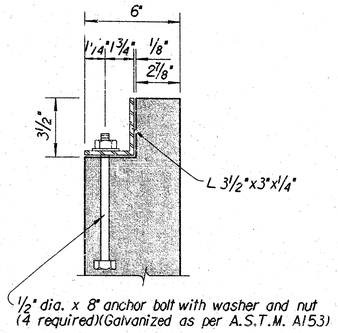


SECTION B-B

Note: Anchor bolts are subsidiary to the bid item "Inlet Type C".

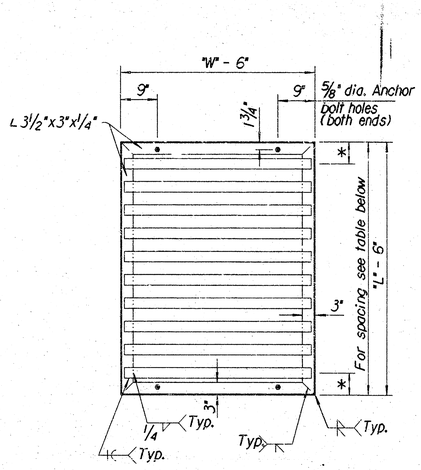


GRATE UNIT DETAILS

## AREA INLET

See Plan Sheet for Inlet orientation.

| PIPE DIMENSIONS AND SPACING | | | | |
|---|---|---|---|---|
| Location | L x W | No. of Pipes | Dia. x Length x Spacing | * |
| (904) | 7'-6"x4'-6" | 7 | 2½ø x 3'-10¼" pipes @ 12" ctrs. | 6" |
| (902) | 5'-6"x4'-6" | 5 | 2½ø x 3'-10¼" pipes @ 11" ctrs. | 8" |
| (907) | 7'-6"x4'-6" | 7 | 2½ø x 3'-10¼" pipes @ 12" ctrs. | 6" |
| | | | | |
| | | | | |

| INLET LOCATION TABLE | | | |
|---|---|---|---|
| Item | (904) | (902) | (907) |
| S.W.S. Line No. | 2 | 1 | 3 |
| Station | 20+92.1 | 12+75.5 | 33+14.0 |
| Static Pool Elev. | 158.00 | 159.00 | 155.00 |
| Outlet R.C.P. ℄ Elev. | 150.40 | 153.24 | 147.80 |
| Pipe Size | 36"ø R.C.P. | 18"ø R.C.P. | 42"ø R.C.P. |

| BILL OF MATERIALS FOR INLET TYPE C | | | | | | | | | | | | |
|---|---|---|---|---|---|---|---|---|---|---|---|---|
| "L" 7'-6" x "W" 4'-6" x "H" 8'-9" | | | (904) | "L" 5'-6" x "W" 4'-6" x "H" 6'-9" | | | (902) | "L" 7'-6" x "W" 4'-6" x "H" 8'-9" | | | (907) | |
| Bar | No. | Size | Length | Bar | No. | Size | Length | Bar | No. | Size | Length | |
| v | 40 | #4 | 8'-3" | v | 32 | #4 | 6'-3" | v | 40 | #4 | 8'-3" | |
| c | 26 | #4 | 9'-3" | c | 26 | #4 | 7'-3" | c | 26 | #4 | 9'-3" | |
| b | 38 | #4 | 6'-3" | b | 30 | #4 | 6'-3" | b | 38 | #4 | 6'-3" | |
| $h_1$ | 32 | #4 | 7'-3" | $h_1$ | 24 | #4 | 5'-3" | $h_1$ | 32 | #4 | 7'-3" | |
| $h_2$ | 32 | #4 | 4'-3" | $h_2$ | 24 | #4 | 4'-3" | $h_2$ | 32 | #4 | 4'-3" | |
| | | | | | | | | | | | | |
| | | | | | | | | | | | | |
| Class "A" Conc. | | 4.91 | Cu.Yd. | Class "A" Conc. | | 3.30 | Cu.Yd. | Class "A" Conc. | | 4.91 | Cu.Yd. | |
| Reinf. steel | | 786 | Lbs. | Reinf. steel | | 537 | Lbs. | Reinf. steel | | 786 | Lbs. | |
| Struct. steel | | 270 | Lbs. | Struct. steel | | 204 | Lbs. | Struct. steel | | 270 | Lbs. | |

Quantities for Inlets are for information only.

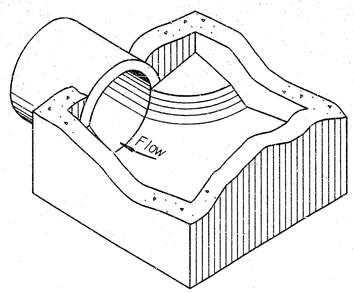


Floor of inlet or manhole shall be shaped as shown to increase hydraulic efficiency.

ISOMETRIC VIEW

## GENERAL NOTES

Concrete shall be as per City of Wichita Standard Specifications for Concrete Paving Mix. Except that it shall have a minimum 28 day compressive strength of 4,000 p.s.i. All Pipes shall be flush cut prior to being cast into the Inlet.

All dimensions relative to Reinforcing Steel are to centerline of bar unless otherwise noted. All Reinforcing Steel shall conform to A.S.T.M. Designation A615 Grade 60 and shall be Epoxy Coated.

All exposed edges shall be finished with an edging tool.

All external pipe to inlet joints shall be coated with an asphaltic tar to waterproof the joint interface.

In general, pipes will enter and leave the manhole at various positions. Where possible bend bars around pipes.

Floor of inlet shall be shaped as shown. Concrete used for shaping shall be unreinforced concrete pavement mix. No addition in concrete quantities shall be made for shaping floor of inlets.

No deductions in concrete quantities shall be made for pipe openings.

All bars are #4 @ 6" spacing and shall have a minimum clearance of 1½" unless otherwise noted on the plans.

The top of the manhole shall be set level.

The grate shall be fabricated from standard or commercial grade structural steel and black steel pipe. The unit shall be hot dipped, galvanized after fabrication, in accordance with ASTM A123 except the weight of coating shall average not less than 2.0 ounces per square foot of actual surface and no individual test shall show less than 1.8 ounces of coating per square foot of actual surface area.

Note: Inlets modified from KDOT Std. No. 648

| No. | Revisions | By | Date |
|---|---|---|---|
| 1 | | | |

NORTHRIDGE LAKES
SWS NO. 462

INLET TYPE C

COW PROJ. NO. 468-76-245-82495-000-000-001

PROFESSIONAL ENGINEERING CONSULTANTS, P.A.
ENGINEERS
WICHITA, KANSAS

| Designed by | RWA | Checked by | RAS | |
|---|---|---|---|---|
| Drawn by | MAF, BJS | Date | Oct. 1995 | Job No. 95469-2 |

7

i:/1995/95469/002/areainlt.dgn
Drawn By: KDOT/RAS
Plotted By: bjs oct. 25, 1995
deliver to brent reinsberg

| PROJECT NO. | SHEET NO. | TOTAL SHEETS |
|---|---|---|
| 488-76-245-82495-200-000-00 | 8 | 12 |

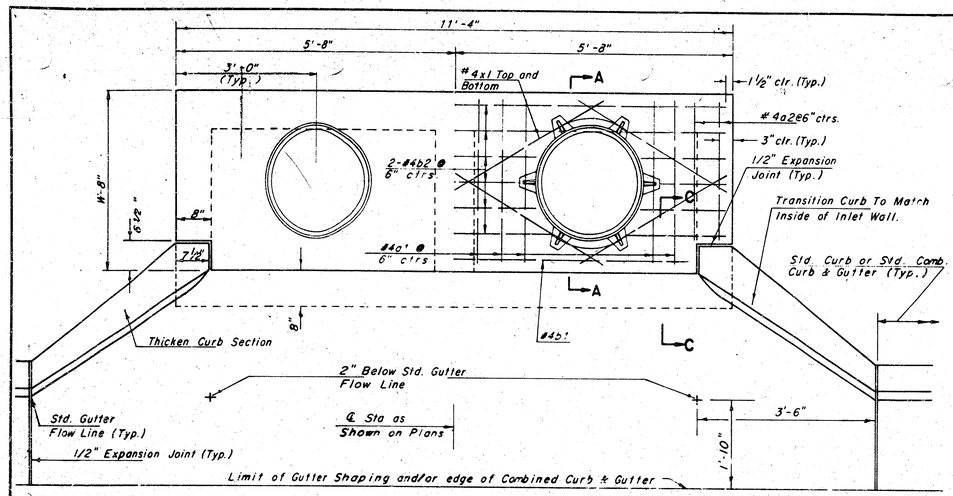


SLAB REINFORCING NOT SHOWN — SHOWING SLAB REINFORCING

PLAN

NOTE Expansion Joint only in Curb Area with Conc. Pavement.

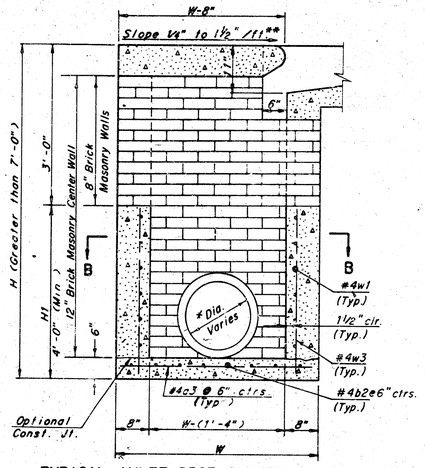


TYPICAL INLET SECTION AT CENTER WALL
(REINFORCED CONCRETE WALLS)

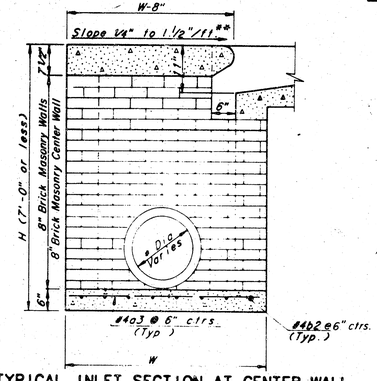


TYPICAL INLET SECTION AT CENTER WALL
(MASONRY WALLS)

* A center wall opening shall be provided by means of a section of reinforced concrete pipe. See Case I and Case II below.

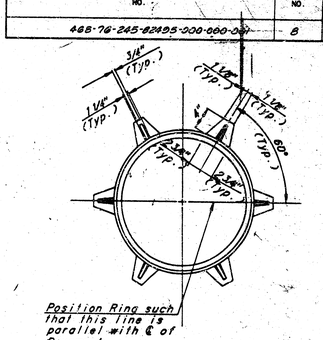


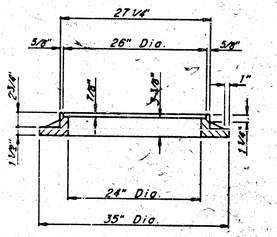


CAST IRON INLET RING
Wt.=180 lbs.

See City of Wichita Standard Manhole Frame and Cover Detail Sheet for Cover Details to be used with Inlet Frame.

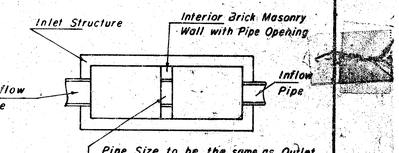


CASE I

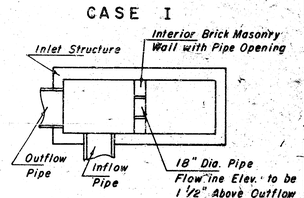


CASE II

NOTE Center Wall Pipe Size shall be as Specified in Inlet Construction Note on the Plan/Profile Sheets for those Cases not shown here.

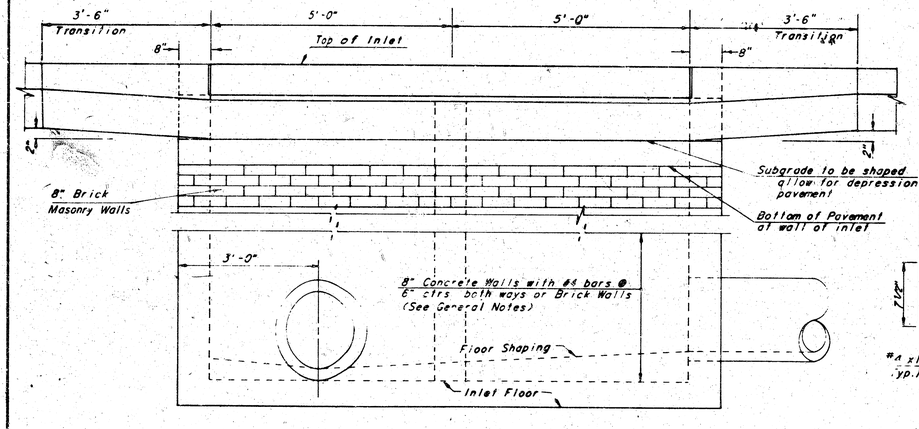


ELEVATION

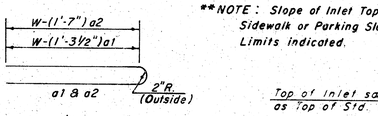


BENDING DIAGRAM

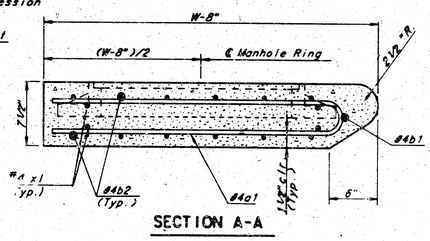


SECTION A-A

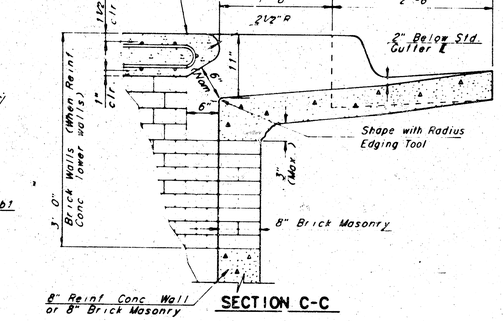


SECTION C-C

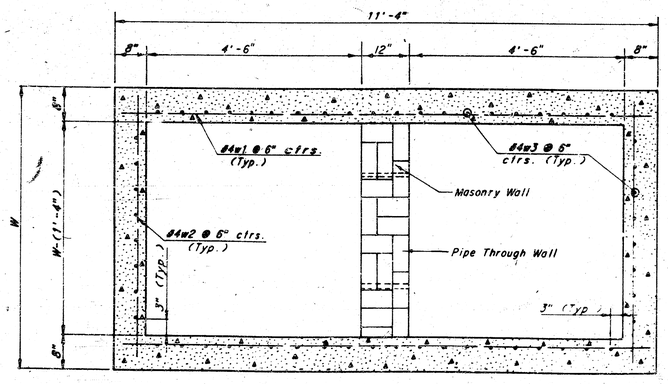


SECTION B-B

## SLAB AND FLOOR REINFORCING

| | | W=4'-4" | | W=5'-4" | | W=6'-4" | | W=7'-4" | | W=8'-4" | |
|---|---|---|---|---|---|---|---|---|---|---|---|
| MARK | SIZE | NO. | LENGTH | NO. | LENGTH | NO. | LENGTH | NO. | LENGTH | NO. | LENGTH |
| #a1 | #4 | 13 | 6'-7" | 13 | 8'-7" | 13 | 10'-7" | 13 | 12'-7" | 13 | 14'-7" |
| a2 | #4 | 4 | 6'-0" | 4 | 8'-0" | 4 | 10'-0" | 4 | 12'-0" | 4 | 14'-0" |
| a3 | #4 | 23 | 4'-1" | 23 | 5'-1" | 23 | 6'-1" | 23 | 7'-1" | 23 | 8'-1" |
| b1 | #4 | 1 | 9'-9" | 1 | 9'-9" | 1 | 9'-9 | 1 | 9'-9" | 1 | 9'-9" |
| eb2 | #4 | 23 | 11'-1" | 29 | 11'-1" | 35 | 11'-1" | 41 | 11'-1" | 47 | 11'-1" |
| x1 | #4 | 16 | 3'-10" | 16 | 4'-2" | 16 | 4'-6" | 16 | 4'-10" | 16 | 5'-2" |

## WALL REINFORCING

| | | W=4'-4" | | W=5'-4" | | W=6'-4" | | W=7'-4" | | W=8'-4" | |
|---|---|---|---|---|---|---|---|---|---|---|---|
| MARK | SIZE | NO. | LENGTH | NO. | LENGTH | NO. | LENGTH | NO. | LENGTH | NO. | LENGTH |
| w1 | #4 | ① | 11'-1" | ① | 11'-1" | ① | 11'-1" | ① | 11'-1" | ① | 11'-1" |
| w2 | #4 | ① | 4'-1" | ① | 5'-1" | ① | 6'-1" | ① | 7'-1" | ① | 8'-1" |
| w3 | #4 | 52 | ② | 56 | ② | 60 | ② | 64 | ② | 68 | ② |

* Field bend or cut Reinforcing as required for clearance
① 4(H1-12") (H1-12") Rounded down to nearest 0.5'
② H1-3"

** NOTE : Slope of Inlet Tops to match Sidewalk or Parking Slopes within Limits indicated.

## GENERAL NOTES

1. THE CONTRACTOR SHALL BE REQUIRED TO CONSTRUCT 8" BRICK MASONRY WALLS BETWEEN THE CONCRETE INLET BASE AND TOP ON THIS INLET WHEN W=6'-4" OR LESS AND H=7'-0" OR LESS. WHEN W IS GREATER THAN 6'-4" AND H IS LESS THAN 7'-0" THE OUTSIDE INLET WALLS BELOW THE BRICK STACK SHALL BE REINFORCED CONCRETE CONSTRUCTION AND THE CENTER WALL SHALL BE OF MASONRY CONSTRUCTION AS SHOWN FOR THE MASONRY WALL OPTION.
2. INLET INVERT SHALL BE SHAPED WITH A SACK SAND MIX CONCRETE TO CREATE FLOW CHANNELS AND TO INCREASE HYDRAULIC EFFICIENCY SUCH THAT THE INLET WILL BE SELF CLEANING BETWEEN ALL INLET AND/OR OUTLET PIPES.
3. CONCRETE TOPS TO BE INSTALLED ON THIN MORTAR CUSHION TO INSURE FULL SUPPORT ALONG BRICK WALLS. CONCRETE TOPS MAY BE CAST IN PLACE OR PRECAST. CONCRETE USED FOR INLET CONSTRUCTION SHALL BE CONCRETE PAVEMENT MIX.
4. INLET TOP REINFORCING SHALL BE SPACED ON 6" MAX. CENTERS. INLET LIDS SHALL BE NOTCHED OUT AS INDICATED TO FACILITATE CONSTRUCTION OF CURB. BARS IN INLET TOP TO BE FIELD BENT OR CUT TO CLEAR MANHOLE RING.
5. THE ENDS OF ALL PIPES INSTALLED IN INLETS SHALL BE CUT OFF FLUSH WITH THE INSIDE FACE OF THE INLET WALL.

| STANDARD CURB INLET PRECAST TOPS | | | |
|---|---|---|---|
| W | PRE-CAST TOP SIZE | SIDE OR INTERIOR WALL PIPE SIZE | CU. YD. CONC. |
| 4'-4" | 3'-8" x 11'-4" x 7 1/2" | 21" & SMALLER | 0.83 ± |
| 5'-4" | 4'-8" x 11'-4" x 7 1/2" | 24" & 30" | 1.09 ± |
| 6'-4" | 5'-8" x 11'-4" x 7 1/2" | 36" & 42" | 1.35 ± |
| 7'-4" | 6'-8" x 11'-4" x 7 1/2" | 48" & 54" | 1.61 ± |
| 8'-4" | 7'-8" x 11'-4" x 7 1/2" | 60" & 66" | 1.87 ± |

~~REVISED 10-5-88~~ Revised 2 16 89 ~~REVISED 12-21-84~~

# STANDARD TYPE 1A CURB INLET

INLET OPENING = 6" x 10'-0"

WICHITA, KANSAS

| Designed by | BEP, KJS, MHB | Checked by | MHB |
|---|---|---|---|
| Drawn by | JCP | Date | Nov., 1984 |
| | | Job No. | 25462-2 |

8

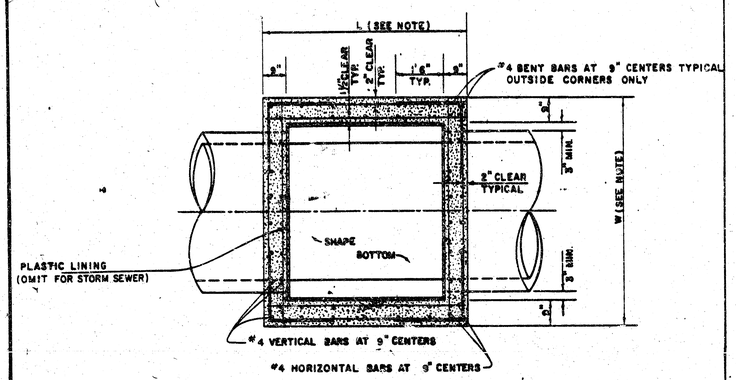


TOP VIEW

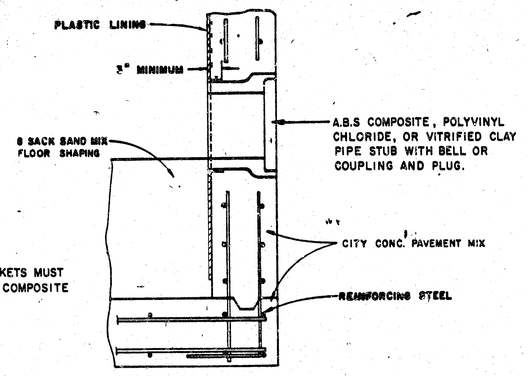


NOTE: WATERSTOP GASKETS MUST BE USED WITH A.B.S COMPOSITE OR P.V.C. PIPE.

PIPE STUB DETAIL
SANITARY SEWER ONLY

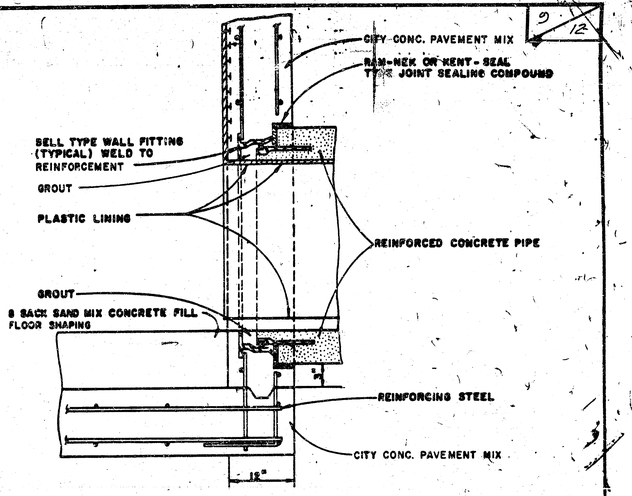


R.C.P. CONNECTION DETAIL
SANITARY SEWER ONLY

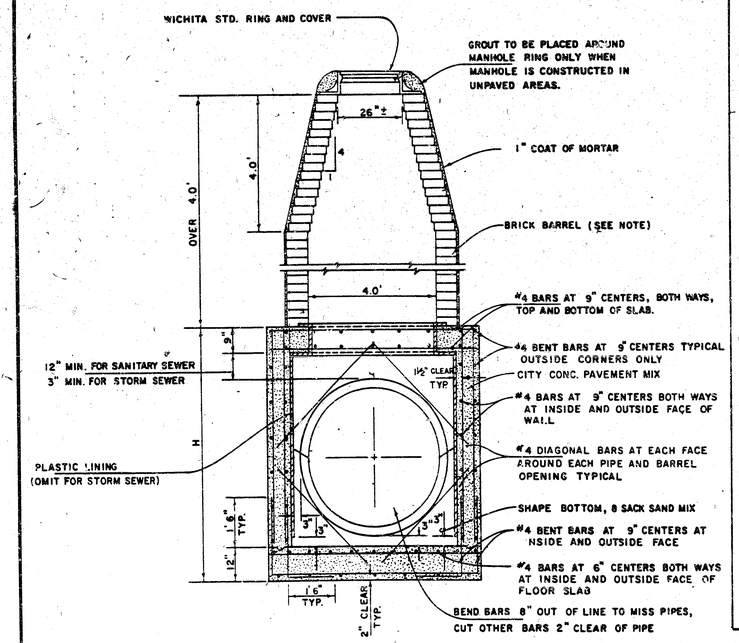


REINFORCED CONCRETE MANHOLE
DEPTH OF STACK: OVER 4.0'
SCALE 1" = 2'

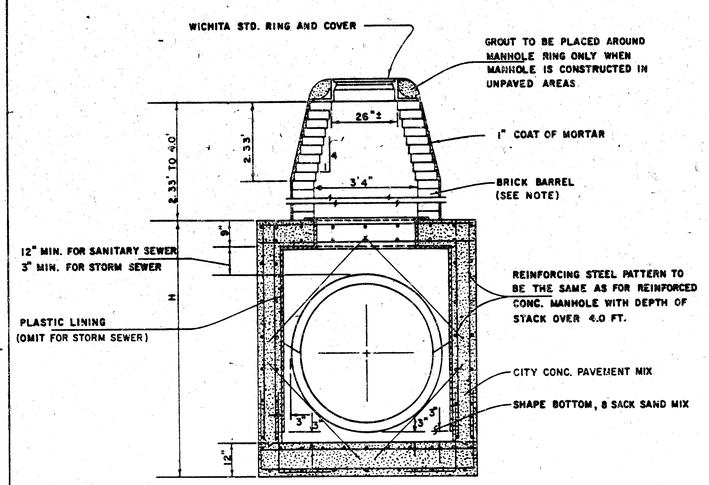


REINFORCED CONCRETE MANHOLE
DEPTH OF STACK: 2.33' TO 4.0'
SCALE 1" = 2'

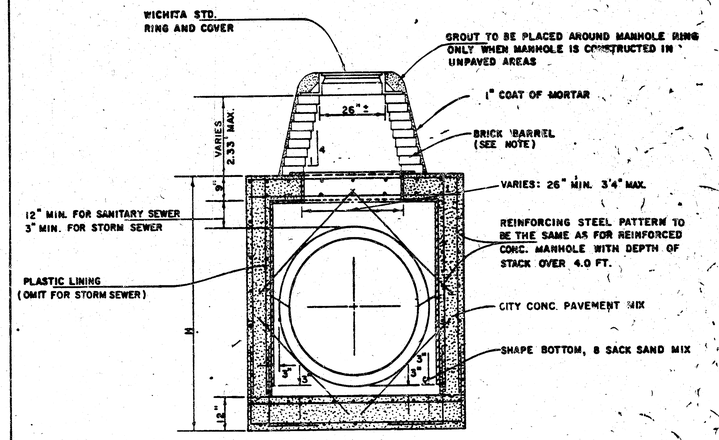


REINFORCED CONCRETE MANHOLE
DEPTH OF STACK: 0' TO 2.33'
SCALE 1" = 2'

NOTE:
BRICK BARRELS LESS THEN 16' DEEP SHALL HAVE 8" WALLS EXCEPT WHEN LOCATED WITHIN PUBLIC STREET OR ALLEY PAVEMENT THEN THE WALL SHALL BE 12". BRICK BARRELS MORE THEN 16' DEEP SHALL HAVE 12" WALLS. THE "L" AND "W" DIMENSIONS SHALL BE A MINIMUM OF 5'6" FOR BRICK BARRELS WITH 8" WALLS AND 6'2" FOR BRICK BARRELS WITH 12" WALLS WHEN THE BRICK BARRELS ARE OVER 4 FT. IN HEIGHT. COMLETED MANHOLE SHALL BE WITHOUT LEAKS AND WATERTIGHT.

City Proj. No. 466-76-245-82485-000-000-001
REVISIED 1-7-85

# STANDARD DETAILS
# REINFORCED CONCRETE MANHOLES
## CITY OF WICHITA

FEBRUARY 1984

| PROJECT NO. | SHEET NO. | TOTAL SHEETS |
|---|---|---|
| 472-76-245-82605-000-000-001 | 10 | 12 |

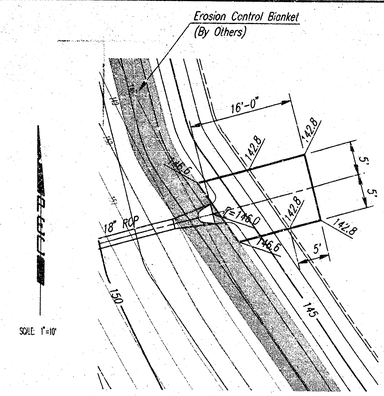


**RIPRAP DETAIL**
*Sta. 10+00.0*
*SWS Line No. 1*

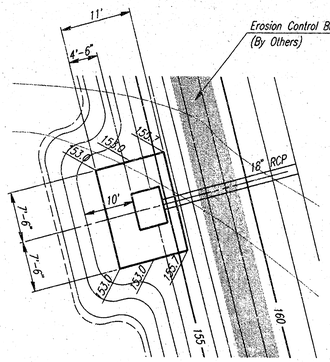


**RIPRAP DETAIL**
*Sta. 12+79.0*
*SWS Line No. 1*

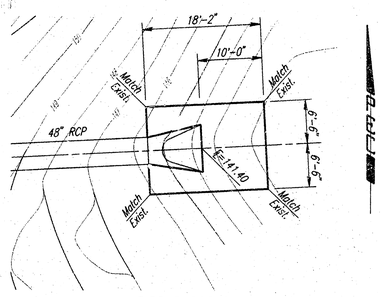


**RIPRAP DETAIL**
*Sta. 40+00.0*
*SWS Line No. 4*

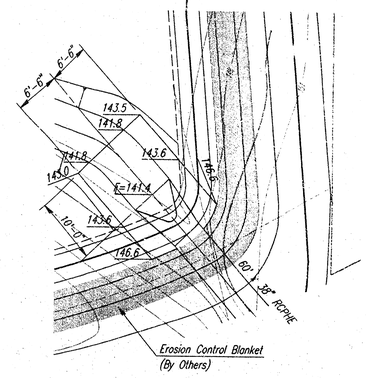


**RIPRAP DETAIL**
*Sta. 42+48.7*
*SWS Line No. 4*

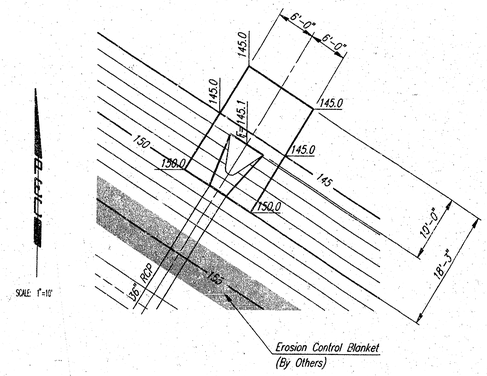


**RIPRAP DETAIL**
*Sta. 20+00.0*
*SWS Line No. 2*

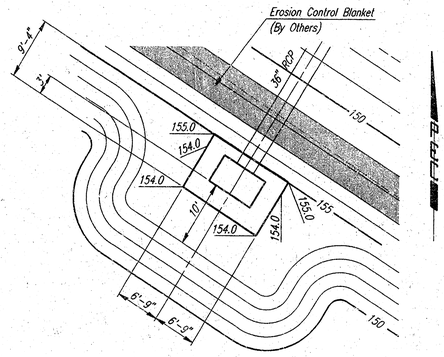


**RIPRAP DETAIL**
*Sta. 21+00.3*
*SWS Line No. 2*

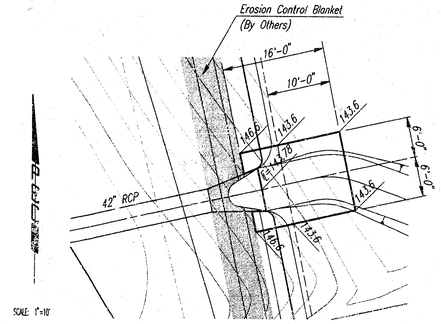


**RIPRAP DETAIL**
*Sta. 30+00.0*
*SWS Line No. 3*

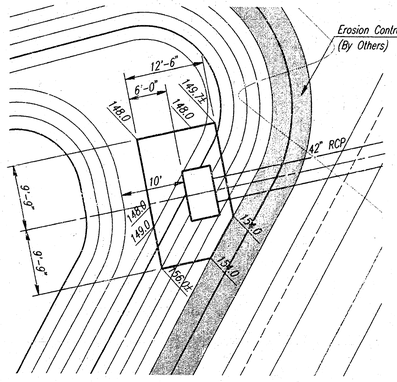


**RIPRAP DETAIL**
*Sta. 33+14.0*
*SWS Line No. 3*

NORTHRIDGE LAKES
SWS NO. 462

# RIPRAP DETAILS

**PROFESSIONAL ENGINEERING CONSULTANTS, P.A.**
ENGINEERS
WICHITA, KANSAS

| Designed by | BER | Checked by | | |
|---|---|---|---|---|
| Drawn by | BJS | Date OCT. 1995 | Job No. 95469-2 | |

10

usr/ustn/dgn: 1995/95469/002/draindtl.dgn
date plotted: oct. 25, 1995
deliver to: brent remsberg

| PROJECT NO. | SHEET NO. | TOTAL SHEETS |
|---|---|---|
| 472-76-245-82605-000-000-001 | 11 | 12 |

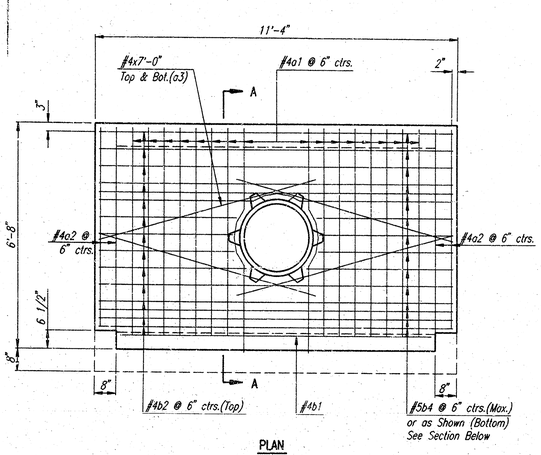


PLAN

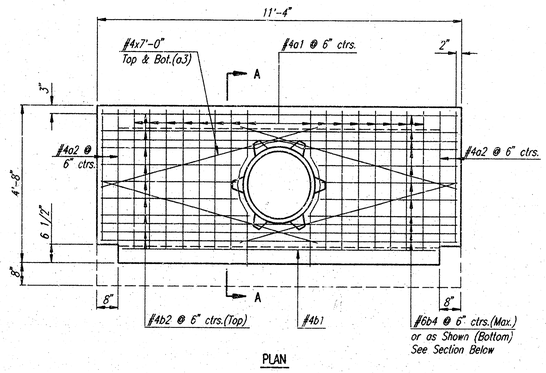


PLAN

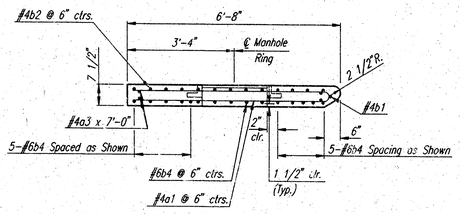


SECTION A-A

## SPECIAL TYPE 1A INLET TOP DETAILS

*Inlet Sta. 41+56.0 Line No. 4*

*See Sh. No. 12 for Cast Iron Inlet Ring Details and General Notes.*

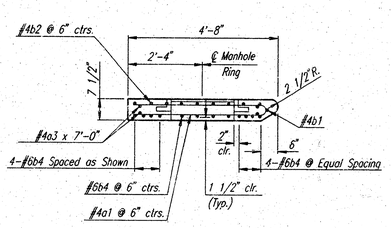


SECTION A-A

## SPECIAL TYPE 1A INLET TOP DETAILS

*Inlet Sta. 41+99.3 Line No. 4*

*See Sh. No. 12 for Cast Iron Inlet Ring Details and General Notes.*

usr/ustn/dgn: 1995/95469/002/specinlt.dgn
date plotted: oct. 25, 1995
deliver to: brent remsberg

NORTHRIDGE LAKES
SWS NO. 462

# SPECIAL TYPE 1A INLET TOP DETAILS

PROFESSIONAL ENGINEERING CONSULTANTS, P.A.
ENGINEERS
WICHITA, KANSAS

| Designed by | BER | Checked by | |
|---|---|---|---|
| Drawn by | BJS | Date OCT. 1995 | Job No. 95469-2 |

# MANHOLE FRAME AND COVER DETAIL

ADOPTED AS STANDARD DESIGN BY
CITY OF WICHITA, KANSAS

MANHOLE COVER
Weight = 180 Lbs.

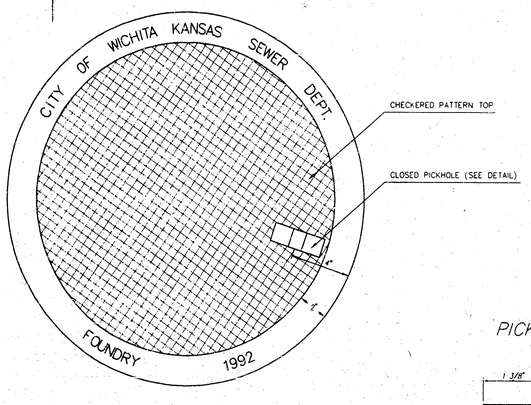


TOP VIEW

PICKHOLE DETAIL

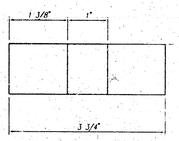


TOP VIEW

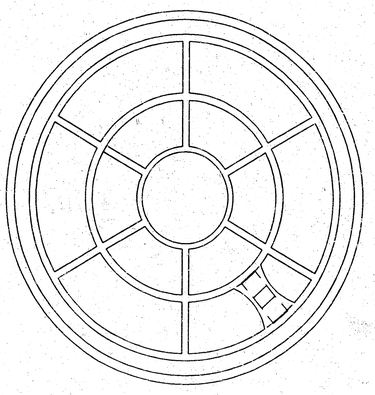

BOTTOM VIEW

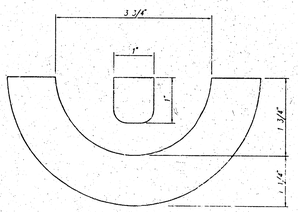


SECTION VIEW

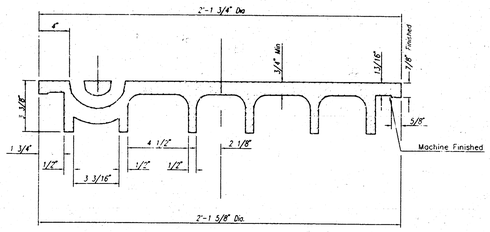


SECTION VIEW

MANHOLE FRAME
Weight = 240 Lbs.

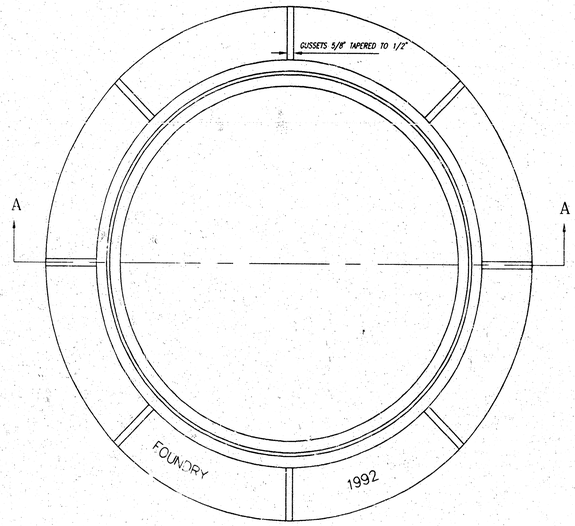


TOP VIEW

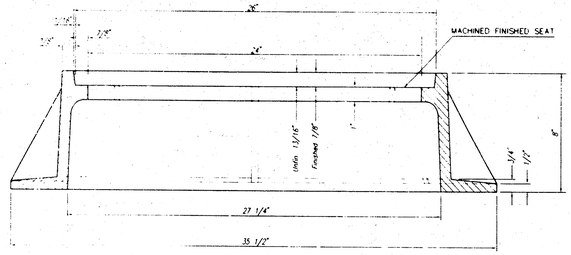


SECTION A–A

## GENERAL NOTES

MANHOLE CASTINGS SHALL BE MANUFACTURED USING GOOD QUALITY GRAY IRON CONFORMING TO CLASS 30 OF A.S.T.M. DESIGNATION A-48. DIMENSIONS AND WEIGHTS SHOWN ON THE DETAILED DRAWINGS SHALL BE CONSIDERED AS MINIMUM REQUIREMENTS AND ANY DEVIATIONS FROM THE DIMENSIONS SHOWN MUST BE SPECIFICALLY APPROVED. THE FINISHED CASTINGS SHALL BE OF UNIFORM QUALITY, FREE FROM BLOWHOLES, POROSITY, HARD SPOTS, SHRINKAGE DISTORTIONS OR OTHER DEFECTS.

MANHOLE CASTINGS SHALL BE MANUFACTURED SUCH THAT A COVER MANUFACTURED BY ANY ONE FOUNDARY WILL FIT INTERCHANGEABLY INTO A FRAME MANUFACTURED BY ANOTHER FOUNDRY AND STILL MEET ALLOWABLE CLEARANCES AND NON-ROCKING REQUIREMENTS. THIS WILL REQUIRE MANUFACTURING OF THE MATCHING FACES ON THE COVER AND THE FRAME TO CLOSE TOLERANCES.

THE OUTSIDE CIRCUMFERENCE OF THE VERTICAL FACE OF THE COVER AND THE INSIDE CIRCUMFERENCE OF THE VERTICAL FACE IN THE FRAME RECESS SHALL BE MANUFACTURED TO TOLERANCES SUCH THAT THE CLEARANCE BETWEEN THE COVER AND FRAME WILL NOT EXCEED 1/8" AT ANY POINT AROUND THE CIRCUMFERENCE OF THE COVER. THE SEATING SURFACES BETWEEN THE COVER AND FRAME SHALL BE MACHINED SUCH AS THESE SURFACES SHALL MAKE FULL CONTACT FOR THEIR FULL CIRCUMFERENCE TO PRECLUDE THE COVER FROM ROCKING IN THE FRAME.

THE MANHOLE FRAME AND COVER SHALL BE MARKED WITH LETTERING INDICATING THE NAME OF THE MANUFACTURER AND THE YEAR WHEN THE COVER OR FRAME WAS CAST. THE COVER SHALL BE FURTHER IDENTIFIED WITH REGARDS TO OWNERSHIP USING LETTERS AT LEAST 1 INCH IN HEIGHT. THIS IDENTIFICATION SHALL BE "CITY OF WICHITA SEWER DEPARTMENT". THE WORD DEPARTMENT MAY BE ABBREVIATED. THE TEXTURE OF THE TOP SURFACE OF THE COVER SHALL BE MANUFACTURED IN A CHECKERED PATTERN DESIGN AS INDICATED ON THE DRAWINGS. SMOOTH BLOCKOUTS SHALL BE UTILIZED TO HIGHLIGHT THE LETTERING ON THE COVER SURFACE. THE TOTAL AREA OF SMOOTH SURFACE BLOCKOUT SHALL NOT EXCEED THE AREA AS INDICATED ON THE DRAWING. POSITIONING OF SMOOTH BLOCKOUTS AND LETTERING MAY VARY FROM THAT SHOWN ON THE DETAILED DRAWING.

MANHOLE CASTINGS SHALL WEIGH A MINIMUM OF 180 POUNDS ON THE SOLID COVER AND 240 POUNDS ON THE MANHOLE RING. THIS IS A TOTAL OF 420 POUNDS ON A RING AND COVER SET. CASTINGS WEIGHING LESS THAN THE MINIMUM SPECIFICATIONS WILL NOT BE ACCEPTED.

TO INSURE CONFORMANCE TO TENSILE STRENGTH REQUIREMENTS ALL CASTINGS SHALL BE JULIAN HEAT DATED WITH THE FOLLOWING REQUIREMENTS:

TWO TEST BAR SPECIMENS MUST BE POURED WHEN PRODUCING CITY OF WICHITA CASTINGS. ONE OF THE TEST BAR SPECIMENS SHALL BE SENT TO AN INDEPENDENT LABORATORY FOR TENSILE STRENGTH VERIFICATION TESTING. A TEST REPORT SHALL ACCOMPANY EACH SHIPMENT OF CASTINGS. THE HEAT DATE(S) ON THE CASTINGS SHALL RESPOND TO THE TENSILE STRENGTH REPORT(S). THE TEST REPORT WILL BE PAID FOR BY THE SUPPLIER. THE REMAINING TEST BAR SPECIMEN WILL BE SHIPPED TO SEWER MAINTENANCE AT 715 W. HARRY, WICHITA, KANSAS 67213.

MANHOLE FRAME AND COVER DETAIL
ADOPTED AS STANDARD DESIGN BY
CITY OF WICHITA, KANSAS

CITY OF WICHITA, KANSAS
M. E. LINDEBAK – CITY ENGINEER

REVISED 6/27/95

PROJ. NO. 468-76-245-~~82495~~-000-000-001

SHEET 12 OF 12

12-1-82