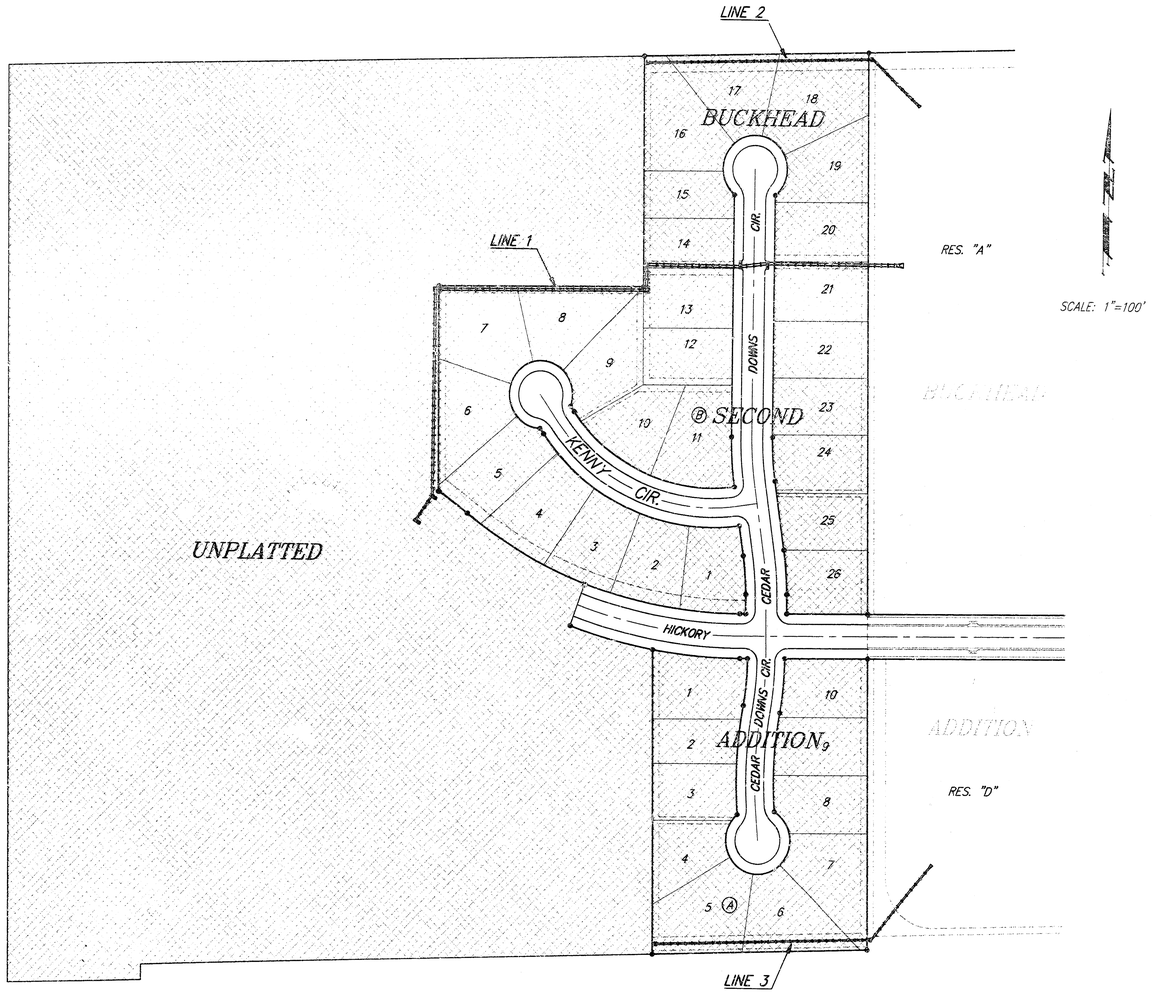

STORM WATER SEWER #483

to serve

Buckhead 2nd Addition

CITY OF WICHITA, KANSAS

Michael E. Lindebak, P.E. City Engineer

Project Number

468-82705

Index Code:

750968

Sheet Index

Title Sheet	1
Line 1	2–4
Line 2	5
Line 3	6
Easement Grading Plan	7
Type 1A Inlet Detail	8
Drop Inlet Detail	9
Special Inlet Detail	10
Copy of Plat	11

Benchmarks

"□" Cut in Southeast Corner Of Lot 17, Block D, Buckhead Addition, North Of Return At Back of Walk.
Elev. = 155.59 City Datum

"□" Cut in Top of Curb at North Side of Hickory Street, 56.5' East of ℄ 119th Street W.
Elev. = 158.97 City Datum

GENERAL NOTES:

1. Contractor will be required to provide notice to utility companies a minimum of twenty-four (24) hours prior to any excavation, as follows:

   Kansas One-Call 687-2470

   The Contractor must notify the following in case of an emergency:

Cablevision	262-4270
or	263-2061
K.P.L. Gas Service Company	263-7511
Kansas Gas & Electric Company	264-1141
Peoples Nat. Gas Company	942-8350
Southwestern Bell Telephone Company	1-571-2611
City of Wichita Water Department	268-4908
City of Wichita Sewer Maintenance	268-4071

2. Utility service lines, poles, valve boxes, meters, and etcetera ars to be adjusted as necessary by others prior to construction unless the plans specifically call for their adjustment by the Contractor or unless the plans specifically identify a utility to be adjusted by its owner during construction. Existing utilities and their location, as shown on the plans, represent the best information obtainable for design. The contractor will be required to work around existing utilities within the right-of-way which do not conflict with proposed construction.

3. All areas disturbed by construction shall be seeded at 300 lbs./acre with Rye Grass immediately following construction in that area. Contractor shall prepare ground per City specifications.

4. Rubble from the removal of miscellaneous structures and excess excavation which is to be wasted shall be disposed of on sites to be provided by the Contractor. These sites shall be approved by the Engineer as to suitability, appearance and site location. Locations that, in the opinion of the Engineer, will leave an unsightly appearance will not be approved. All disposal sites must be approved by the Kansas Department of Health and Environment. Material either stockpiles or disposed of in a flood plain would a Kansas State Board of Agriculture permit. Any material dumped in waters of the United States or wetlands is subject to U.S. Corps. of Engineers permitting regulations. Any material buried or stockpiled beyond approved construction limits would require additional archaeological investigations unless buried in a previously approved borrow location.

5. Trees and shrubs in public right-of-way which are in direct conflict with proposed new construction shall be removed by the Contractor with the Engineer's approval. Trees and shrubs which are not in direct conflict with proposed new construction shall be saved and protected from damage.

6. The Contractor shall be responsible for preserving property irons. The Contractor will be required to re-establish any property irons which are damaged or destroyed by his construction operations. Such irons shall be re-established by a licensed land surveyor in accordance with state law.

Booked 9-30-97 MCG D-361

Benefit District

Approximate Earthwork Quantities:
Excavation = 700 C.Y.
Fill = 80 C.Y.

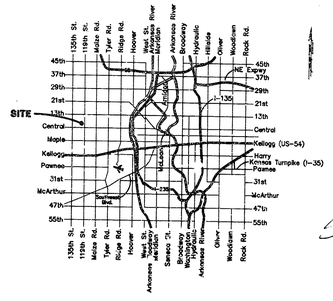

Vicinity Map



BAUGHMAN COMPANY P. A.
ENGINEERING & SURVEYING
316/262-7271 • 315 ELLIS • WICHITA, KANSAS 67211

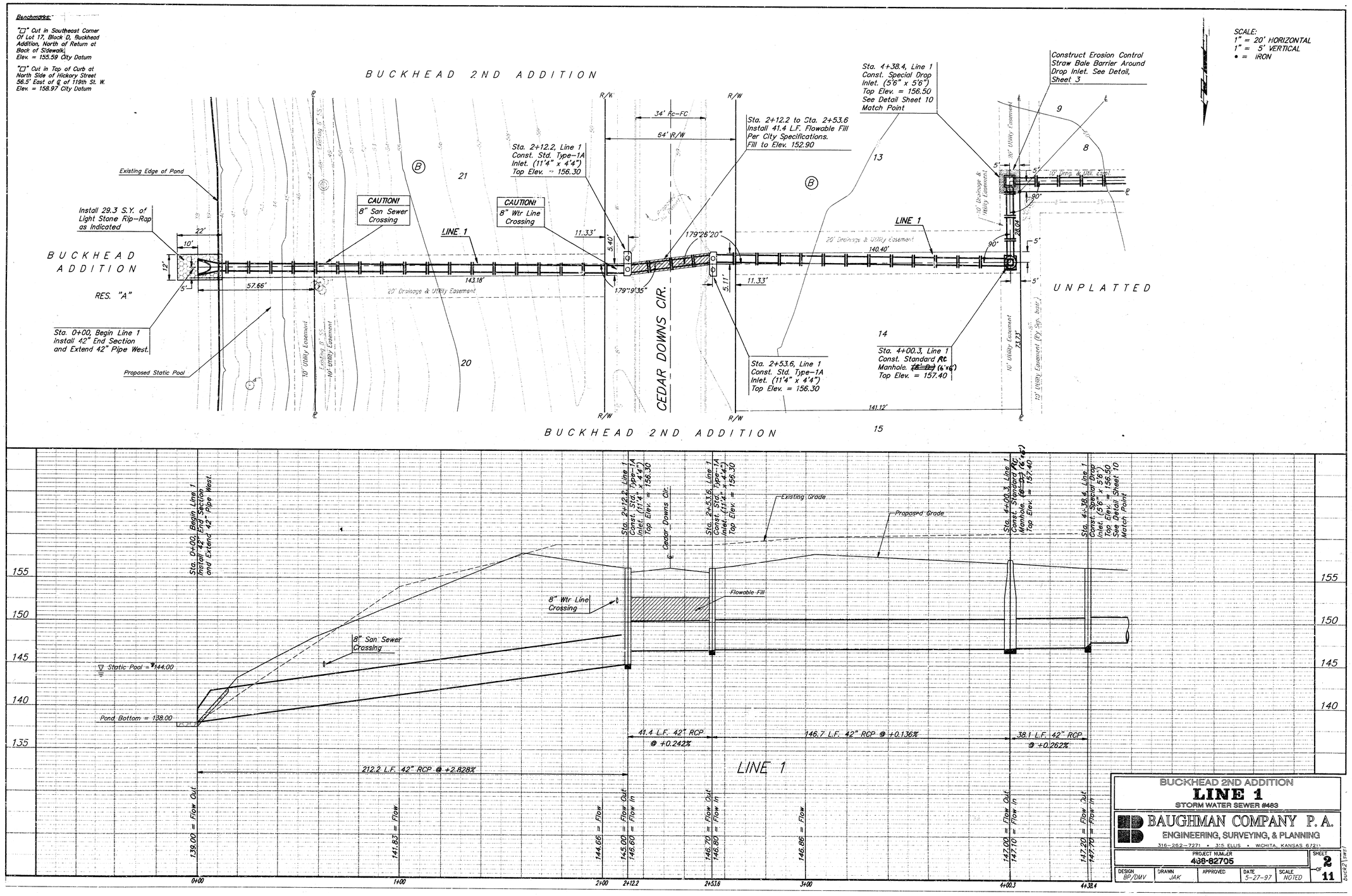

BUCKHEAD 2ND ADDITION
LINE 1
STORM WATER SEWER #483

BAUGHMAN COMPANY P.A.
ENGINEERING, SURVEYING, & PLANNING
316-262-7271 • 315 ELLIS • WICHITA, KANSAS 67211

PROJECT NUMBER					SHEET
488-82705					2 OF 11
DESIGN BP/DMV	DRAWN JAK	APPROVED	DATE 5-27-97	SCALE NOTED	

buck2\sws1

Benchmarks:

"□" Cut in Southeast Corner Of Lot 17, Block D, Buckhead Addition, North of Return at Back of Sidewalk.
Elev. = 155.59 City Datum

"□" Cut in Top of Curb at North Side of Hickory Street 56.5' East of ℄ of 119th St. W.
Elev. = 158.97 City Datum

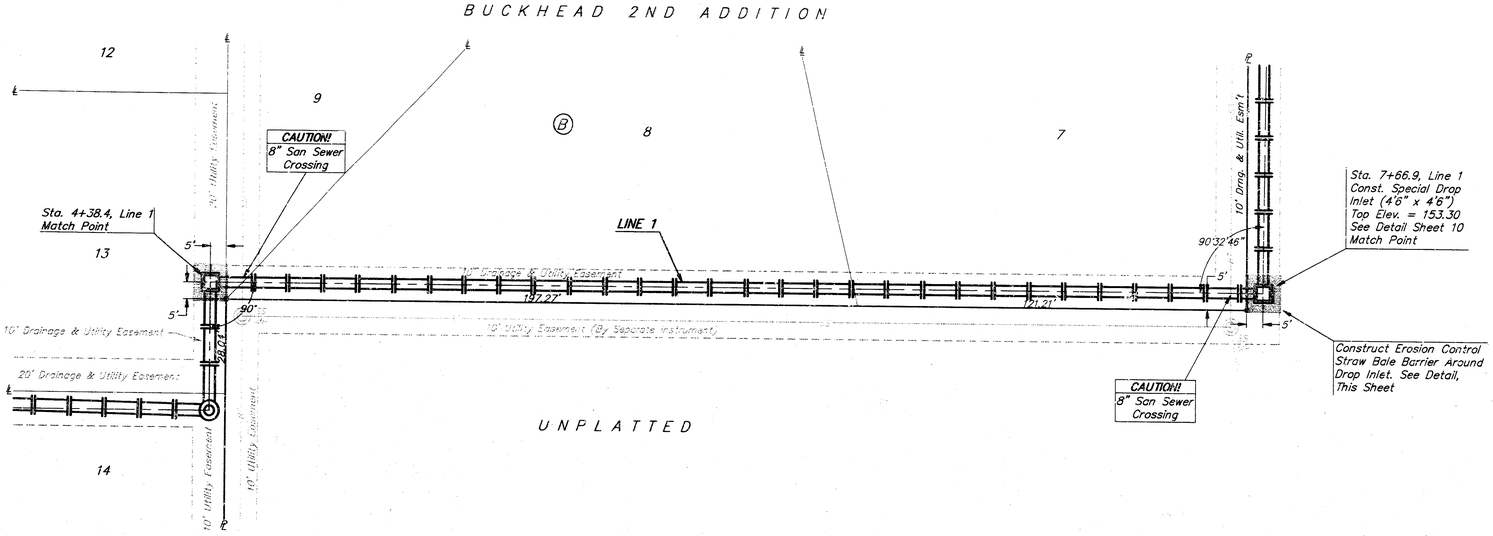

SCALE:
1" = 20' HORIZONTAL
1" = 5' VERTICAL
• = IRON

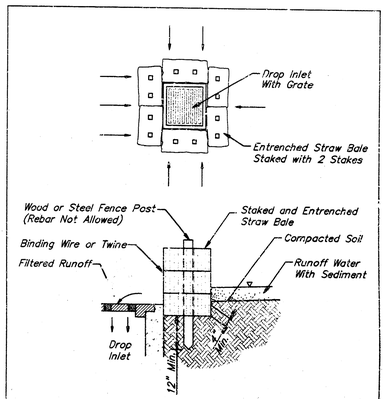

Straw Bale Barrier Detail

Note: Straw Bale Barriers to be Paid per Each as Inlet Sediment Barriers.

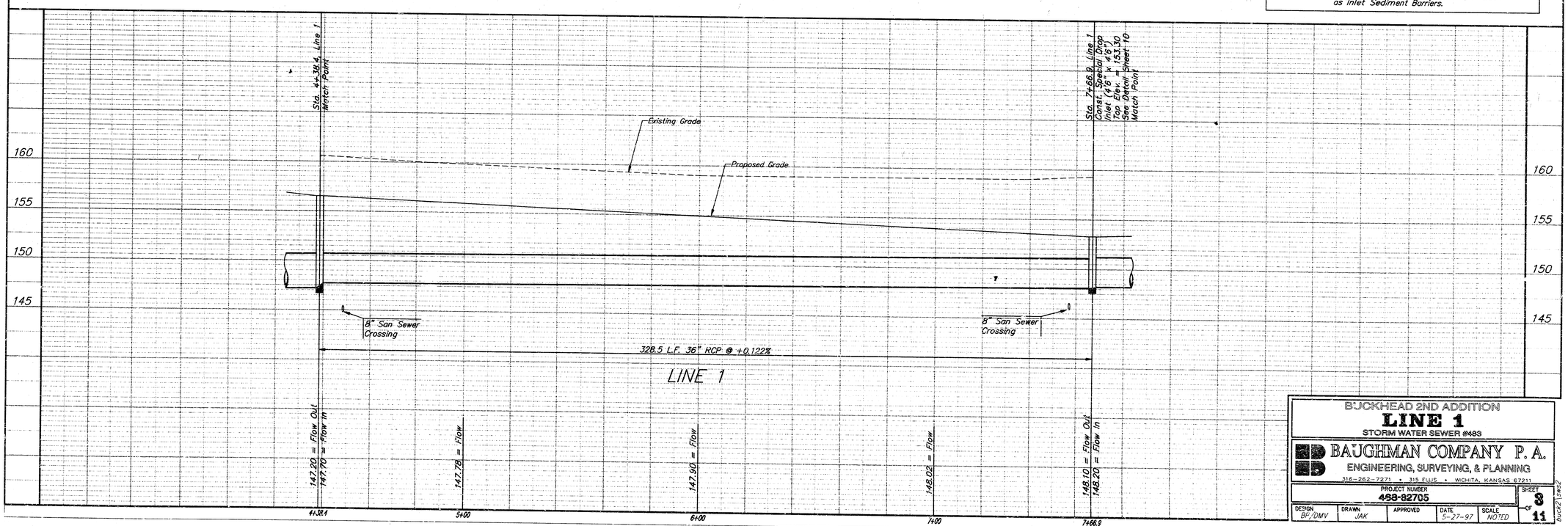

BUCKHEAD 2ND ADDITION
LINE 1
STORM WATER SEWER #483

BAUGHMAN COMPANY P. A.
ENGINEERING, SURVEYING, & PLANNING
316-262-7271 • 315 ELLIS • WICHITA, KANSAS 67211

PROJECT NUMBER 458-82705

DESIGN	DRAWN	APPROVED	DATE	SCALE
BP/DMV	JAK		5-27-97	NOTED

SHEET 3 OF 11

buck2 | sht2

Benchmarks:

"□" Cut In Southeast Corner Of Lot 17, Block D, Buckhead Addition, North of Return at Back of Sidewalk.
Elev. = 155.59 City Datum

"□" Cut in Top of Curb at North Side of Hickory Street 56.5' East of ℄ of 119th St. W.
Elev. = 158.97 City Datum

BUCKHEAD 2ND ADDITION

SCALE:
1" = 20' HORIZONTAL
1" = 5' VERTICAL
• = IRON

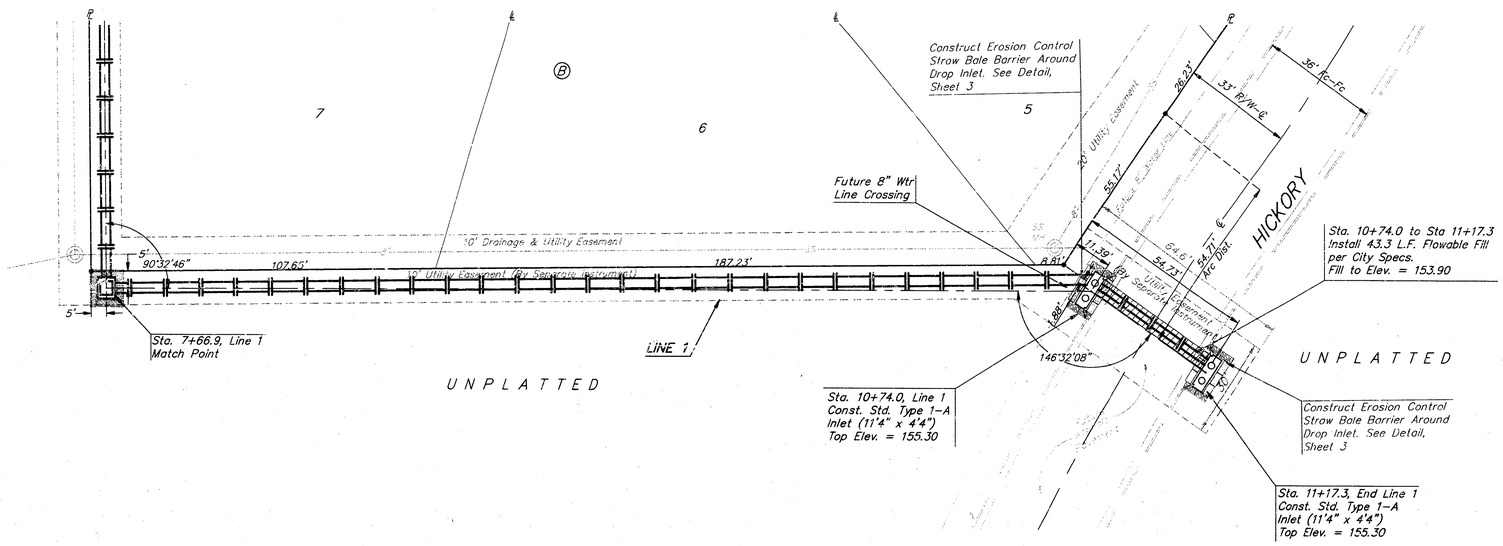

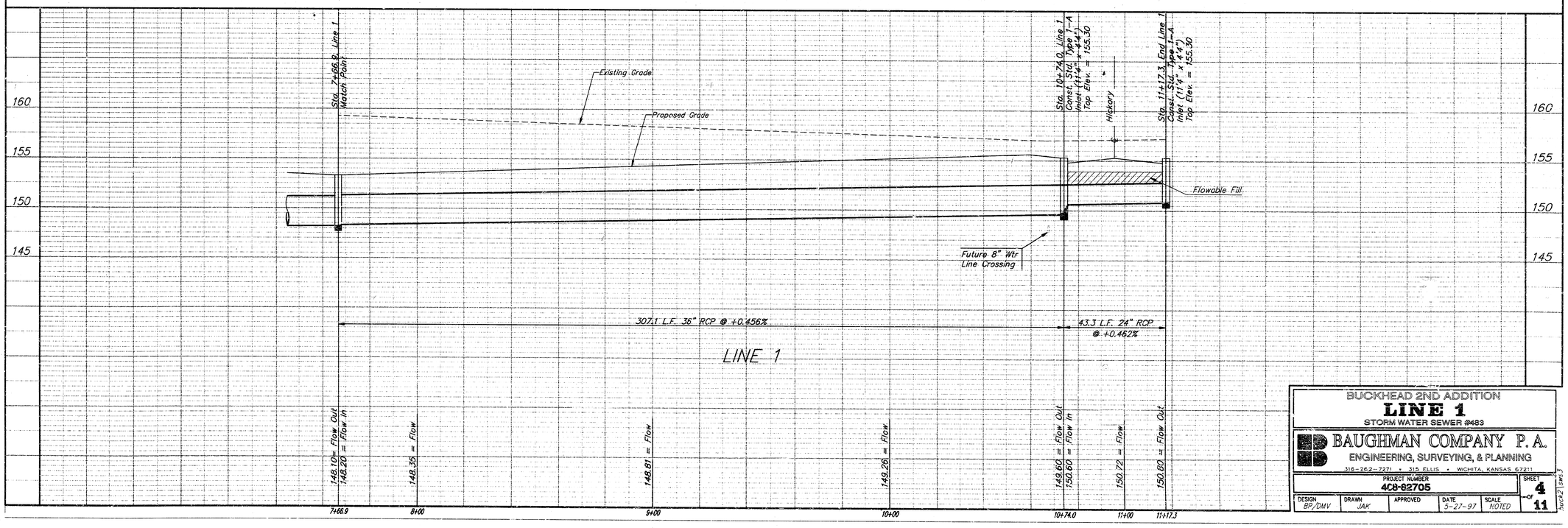

BUCKHEAD 2ND ADDITION
LINE 1
STORM WATER SEWER #483

BAUGHMAN COMPANY P. A.
ENGINEERING, SURVEYING, & PLANNING
316-262-7271 • 315 ELLIS • WICHITA, KANSAS 67211

PROJECT NUMBER	SHEET
4C8-82705	4 OF 11

DESIGN	DRAWN	APPROVED	DATE	SCALE
BP/DMV	JAK		5-27-97	NOTED

Buck2 sws 3

Benchmarks:

"□" Cut in Southeast Corner Of Lot 17, Block D, Buckhead Addition, North of Return at Back of Sidewalk. Elev. = 155.59 City Datum

"□" Cut in Top of Curb at North Side of Hickory Street 56.5' East of ℄ of 119th St. W. Elev. = 158.97 City Datum

SCALE:
1" = 20' HORIZONTAL
1" = 5' VERTICAL
• = IRON

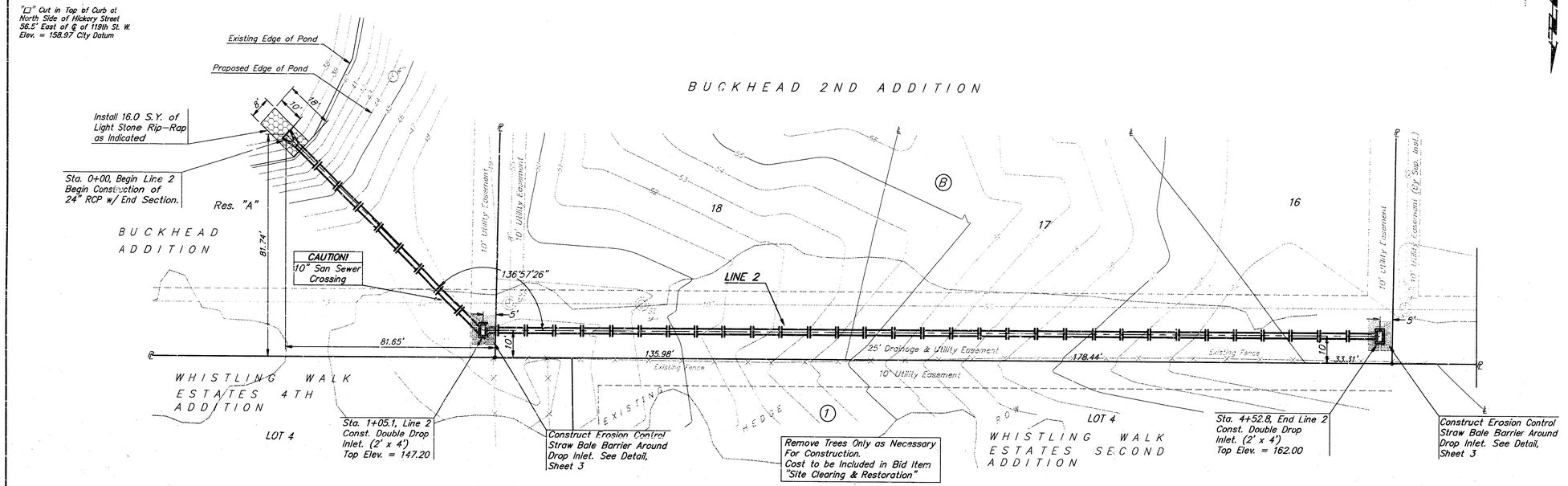

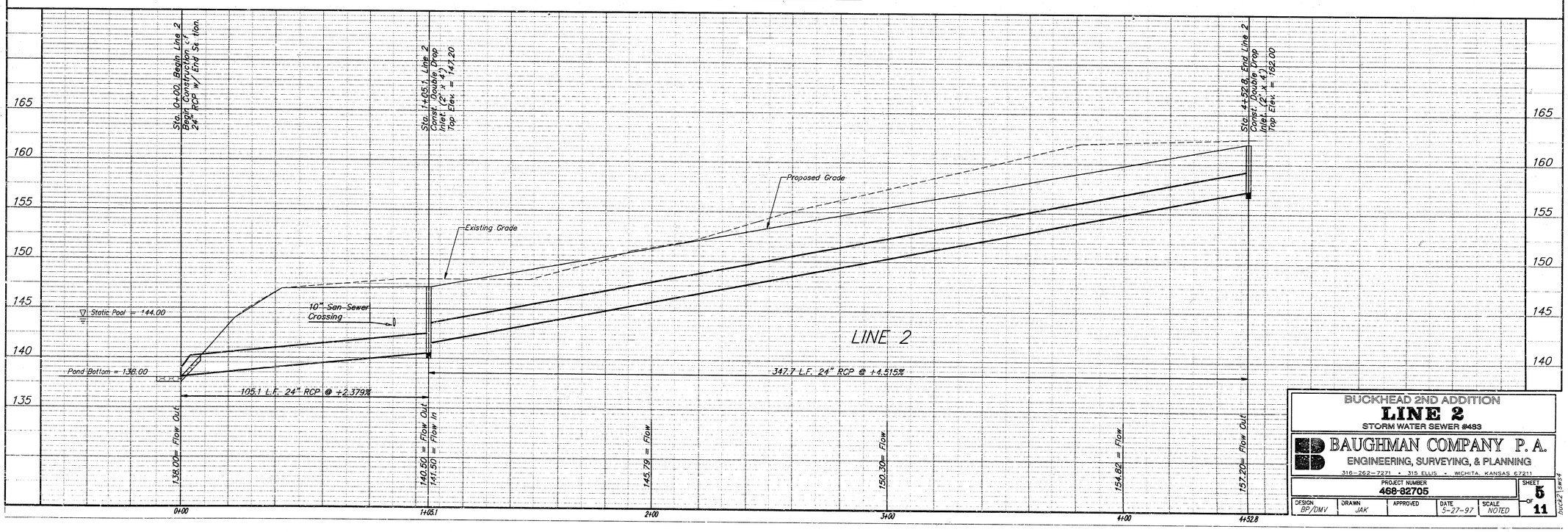

BUCKHEAD 2ND ADDITION
LINE 2
STORM WATER SEWER #483

BAUGHMAN COMPANY P. A.
ENGINEERING, SURVEYING, & PLANNING
316-262-7271 • 315 ELLIS • WICHITA, KANSAS 67211

PROJECT NUMBER	SHEET
468-82705	5 OF 11

DESIGN	DRAWN	APPROVED	DATE	SCALE
BF/DMV	JAK		5-27-97	NOTED

buck2lsws4

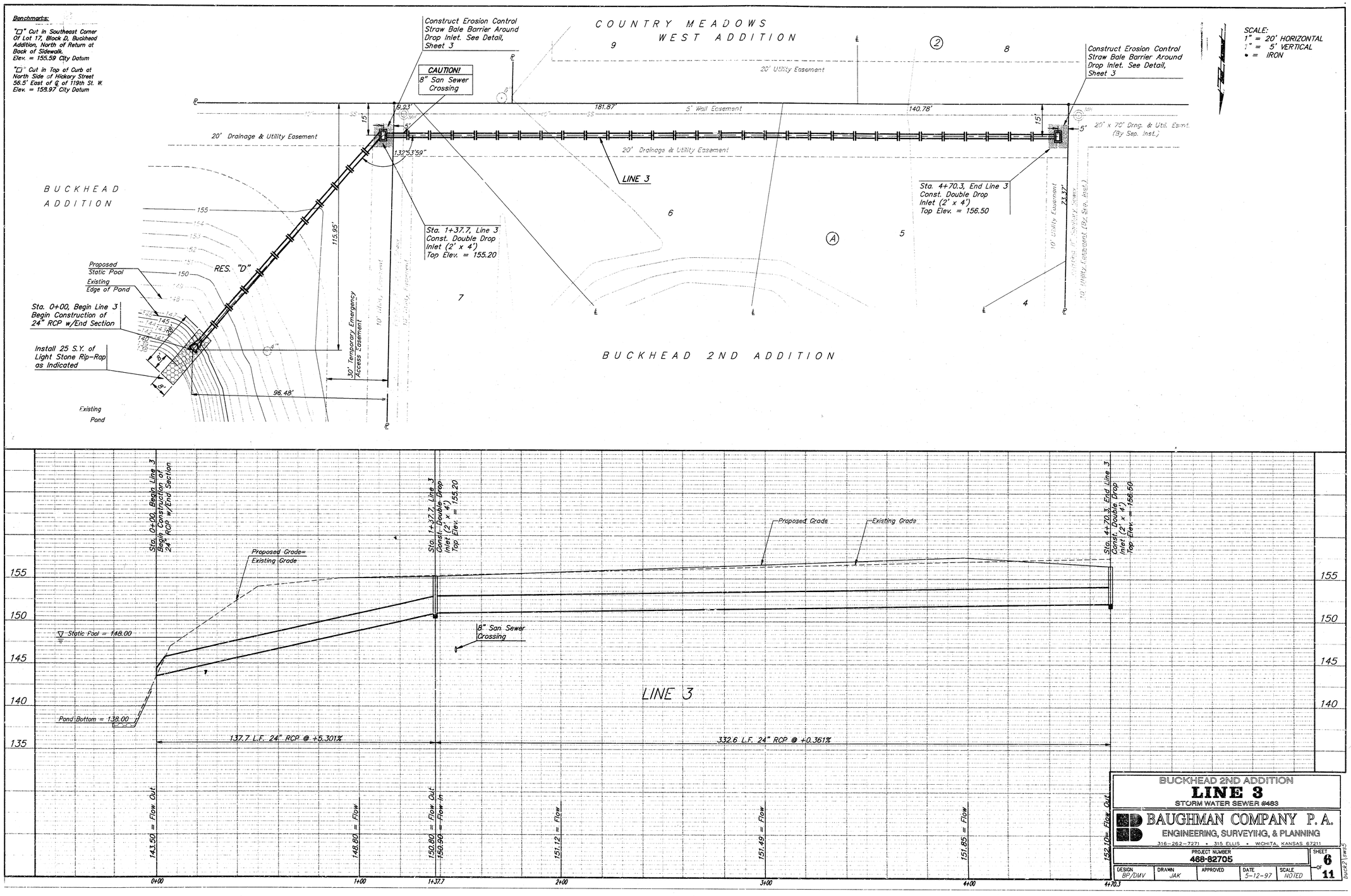

BUCKHEAD 2ND ADDITION
LINE 3
STORM WATER SEWER #483

BAUGHMAN COMPANY P.A.
ENGINEERING, SURVEYING, & PLANNING
316-262-7271 • 315 ELLIS • WICHITA, KANSAS 67211

PROJECT NUMBER					SHEET
468-82705					6 OF 11
DESIGN BP/DMV	DRAWN JAK	APPROVED	DATE 5-12-97	SCALE NOTED	

buck2\sws5

= Easements To Be Graded

Quantities are provided for information only. Lump Sum bid item "Easement Grading" shall include all excavation, fill, and any other work necessary to grade easements as indicated on this plan.

The contractor shall 'straight' grade the easements between the elevations given. Where a callout designates 'Match', the contractor will grade to the existing ground elevation.

Approximate Earthwork Quantities:
Excavation = 700 C.Y.
Fill = 80 C.Y.

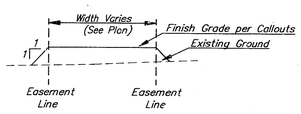

TYPICAL FILL SECTION UNDEVELOPED AREAS

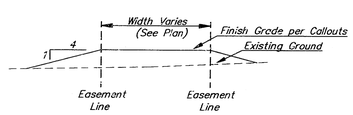

TYPICAL FILL SECTION DEVELOPED AREAS

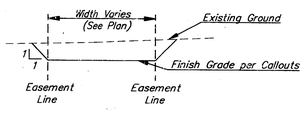

TYPICAL CUT SECTION UNDEVELOPED AREAS

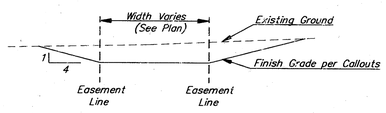

TYPICAL CUT SECTION DEVELOPED AREAS

HICKORY
KENNY
CEDAR DOWN CT.
CEDAR DOWN CT.
Δ=09°58'55"
R=755.82'
L=131.68'
A
B
C.L.
156.00 SS-MH
153.30 INLET
153.90 SS-MH
156.80 SS-MH
158.13 SS-MH
157.1 SS-MH
156.5 INLET
157.10 SS-MH
157.40 SWS-MH
156.20 SS-MH
156.50 INLET
158.80 SS-MH
157.30 SS-MH
162.60 SS-MH
162.00 INLET
149.40 SS-MH
147.90 SS-MH
147.20 INLET
140.40 SS-MH
155.20 INLET
155.8 SS-MH
156.5 SS-MH
154.40 SS-MH
303.69'
167.03'
101.65'
10' DRNG. & UTIL.
10' ESM'T.
UTIL. ESM'T.
DRNG. ESM'T.
"EASEMENT"
UTILITY EASEMENT
Q 20' UTIL. EASEMENT
10' DRNG. & UTIL. ESM'T.
NO V.O.
158.8 V.O.
163.2 T.F.
163.5 T.F.
158.6 V.O.
162.9 T.F.
157.8 V.O.
162.2 T.F.
161.8 T.F.
157.4 V.O.
161.3 T.F.
158.5 V.O.
159.0 V.O.
161.5 T.F.
161.2 T.F.
162.2 T.F.
162.8 T.F.
162.4 V.O.
162.5 T.F.
157.6 V.O.
160.8 T.F.
155.9 V.O.
160.0 T.F.
155.6 V.O.
159.9 T.F.
155.5 V.O.
160.6 T.F.
155.7 V.O.
160.5 T.F.
152.6 W.O.
160.2 T.F.
152.3 W.O.
159.9 T.F.
152.0 W.O.
159.6 T.F.
151.7 W.O.
159.9 T.F.
152.0 W.O.
160.7 T.F.
152.8 W.O.
160.9 T.F.
161.0 T.F.
161.2 T.F.
157.7 W.O.
430.24'
102.38'
73.28'
124.67'
84.12'
66'
42.27'
57.82'
75.19'
66.37'
20.60'
70.11'
171.68'
430.68'
73.73'
170.30'
147.07'
73.73'
141.12'
123.95'
84'
61'
70'
84'
89.04'
73.73'
35.23'
39.99'
46.98'
66.11'
124.84'
141.79'
142.58'
144.47'
144.87'
145.69'
148.33'
152.07'
155.37' MATCH
155.82' MATCH
155.58' MATCH
155.58' MATCH
155.58

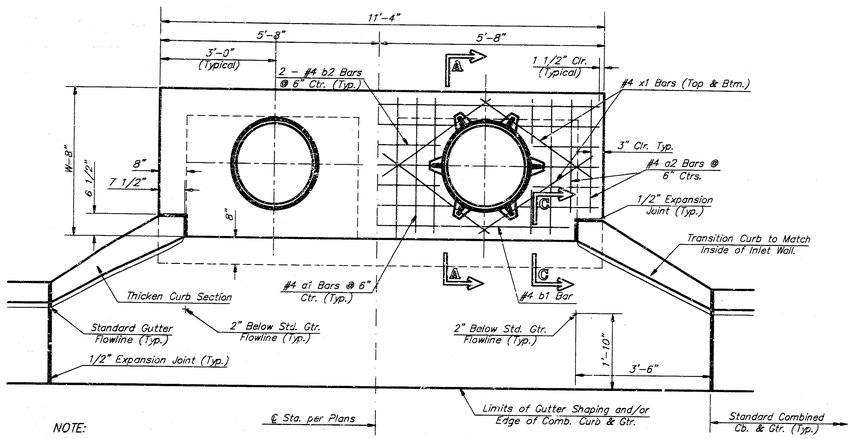

NOTE:
Expansion Joint Only in Curb Area with Concrete Pavement.

PLAN

*Left Side Shown Without Slab Reinforcing, Right Side Shown With Slab Reinforcing

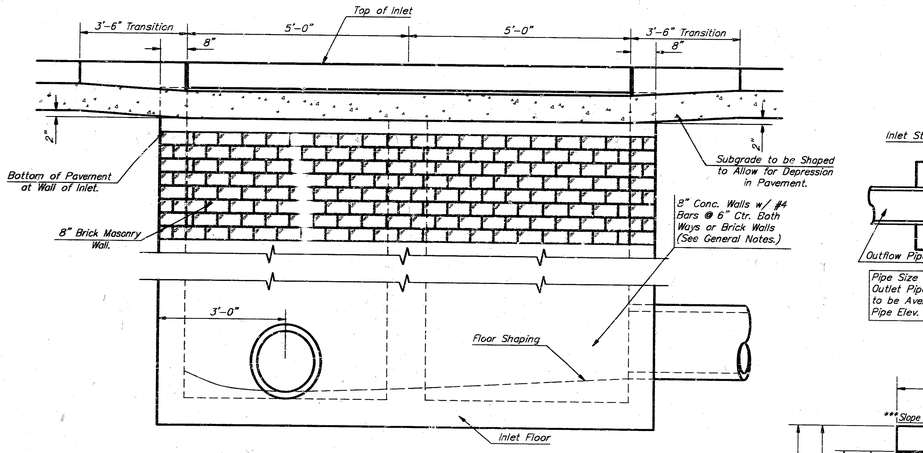

ELEVATION

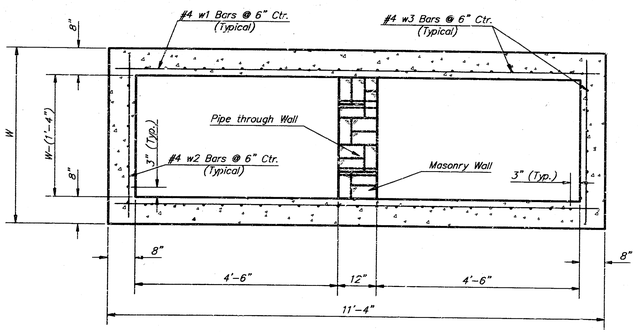

SECTION B-B

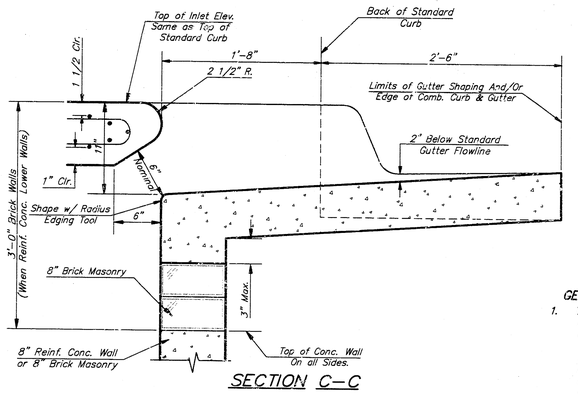

SECTION C-C

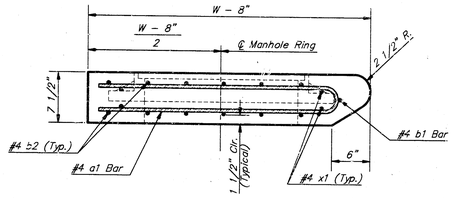

SECTION A-A

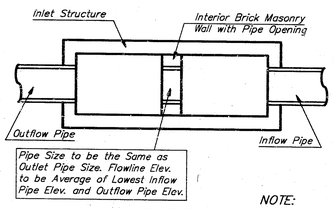

CASE I

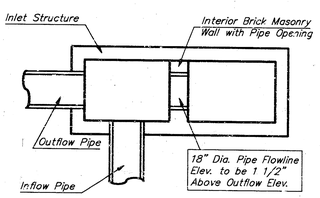

CASE II

NOTE:
Center Wall Pipe Size shall be as Specified in Inlet Construction Notes on the Plan/Profile Sheets for those Cases not Shown Here.

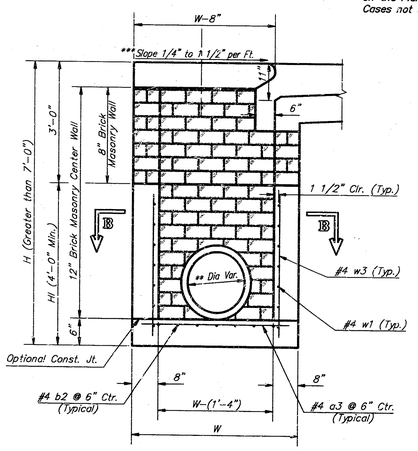

TYPICAL INLET SECTION AT CENTER WALL

(Reinforced Concrete Walls)

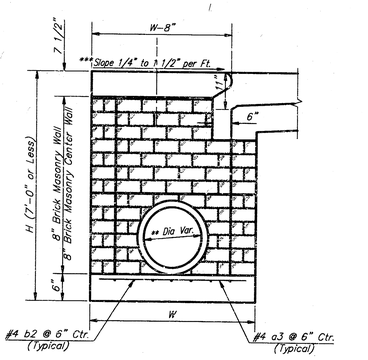

TYPICAL INLET SECTION AT CENTER WALL

(Masonry Walls)

NOTES:
** A center wall opening shall be provided by means of a section of reinforced concrete pipe. See Case I and Case II above.
*** Slope of inlet tops to match sidewalk of parking slopes within limits indicated

PRECAST SLAB AND FLOOR REINFORCING										
		W = 4'-4"		W = 5'-4"		W = 6'-4"		W = 7'-4"		W = 8'-4"
MARK	SIZE	NO.	LENGTH	NO.	LENGTH	NO.	LENGTH	NO.	LENGTH	NO.	LENGTH
* a1	#4	13	6'-7"	13	8'-7"	13	10'-7"	13	12'-7"	13	14'-7"
a2	#4	4	6'-0"	4	8'-0"	4	10'-0"	4	12'-0"	4	14'-0"
a3	#4	23	4'-1"	23	5'-1"	23	6'-1"	23	7'-1	23	8'-1"
b1	#4	1	9'-9"	1	9'-9"	1	9'-9"	1	9'-9"	1	9'-9"
* b2	#4	23	11'-1"	29	11'-1"	35	11'-1"	41	11'-1"	47	11'-1"
x1	#4	16	3'-10"	16	4'-2"	16	4'-6"	16	4'-10"	16	5'-2"
WALL REINFORCING										
		W = 4'-4"		W = 5'-4"		W = 6'-4"		W = 7'-4"		W = 8'-4"
MARK	SIZE	NO.	LENGTH	NO.	LENGTH	NO.	LENGTH	NO.	LENGTH	NO.	LENGTH
w1	#4	①	11'-1"	①	11'-1"	①	11'-1"	①	11'-1"	①	11'-1"
w2	#4	①	4'-1"	①	5'-1"	①	6'-1"	①	7'-1"	①	8'-1"
w3	#4	52	②	56	②	60	②	64	②	68	②

* Field Bend or Cut Reinforcing as Required for Clearance.
① 4 (HI - 12") (HI - 21") Rounded down to nearest 0.5'
② HI - 3"

GENERAL NOTES:
1. The contractor shall be required to construct 8" brick masonry walls between the concrete inlet base and top on this inlet when W=5'-4" or less and H=7'-0" or less. When W is greater than 5'-4" and H is less than 7'-0" the outside inlet walls below the brick stack shall be reinforced concrete construction and the center wall shall be of masonry construction as shown for the masonry wall option.
2. Inlet invert shall be shaped with 8 sack sand mix concrete to create flow channels and to increase hydraulic efficiency such that the inlet will be self cleaning between all inlet and/or outlet pipes.
3. Concrete tops to be installed on thin mortar cushion to insure full support along brick walls. Concrete tops may be cast in place or precast. Concrete used for inlet construction shall be concrete pavement mix.
4. Inlet top reinforcing shall be spaced on 6" max. centers. Inlet lids shall be notched out as indicated to facilitate construction of curb. Bars in inlet top to be field bent or cut to clear manhole ring.
5. The ends of all pipes installed in inlets shall be cut off flush with the inside face of the inlet wall.

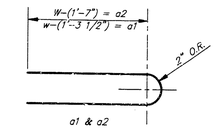

BENDING DIAGRAM

STANDARD CURB INLET PRECAST TOPS			
W	PRE-CAST TOP SIZE	PIPE SIZE	CU. YD. CONC.
4'-4"	3'-8" 11'-4" 7 1/2"	7" & SMALLER	0.83±
5'-4"	4'-8" 11'-4" 7 1/2"	14" & 30"	1.09±
6'-4"	5'-8" 11'-4" 7 1/2"	36" & 42"	1.35±
7'-4"	6'-8" 11'-4" 7 1/2"	48" & 54"	1.61±
8'-4"	7'-8" 11'-4" 7 1/2"	60" & 66"	1.87±

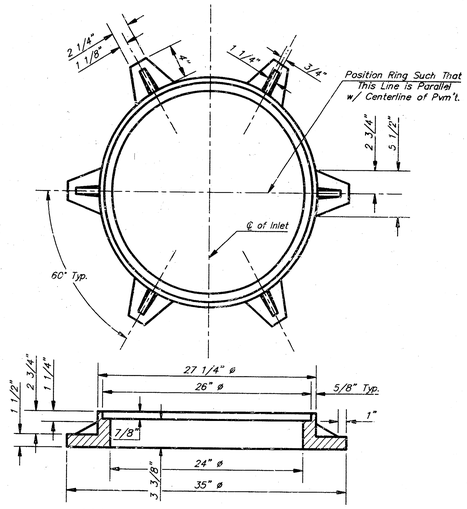

MANHOLE RING AND COVER

Weight = 180 lbs.

*See City of Wichita Standard Manhole Ring and Cover Detail Sheet for Cover Details to Be Used With Inlet Frame.

Revised - Feb. 16, 1989

CITY OF WICHITA STANDARD TYPE 1A

Curb Inlet Details

INLET OPENING = 8' x 10'-0"

BAUGHMAN COMPANY P.A.
ENGINEERING, SURVEYING, & PLANNING
316-262-7271 • 315 ELLIS • WICHITA, KANSAS 67211

PROJECT NUMBER 488-82705 | SHEET 8 OF 11

DESIGN	DRAWN	APPROVED	DATE	SCALE
C.O.W.	Staff			None

Type1A-D

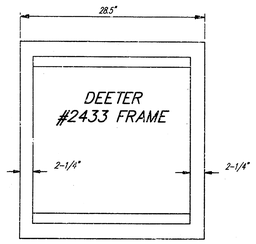

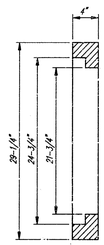

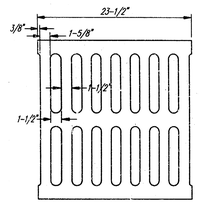

DEETER #2433 GRATE

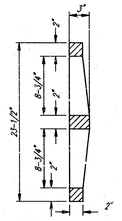

NOTE: Grates shall be imprinted on the top surface with "CITY OF WICHITA" using letters at least 1" in height. Other marking methods may be approved by the engineer.

24" x 24" Frame and Grate Detail

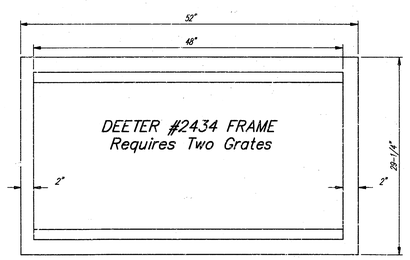

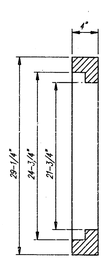

Double 24" x 24" Frame Detail

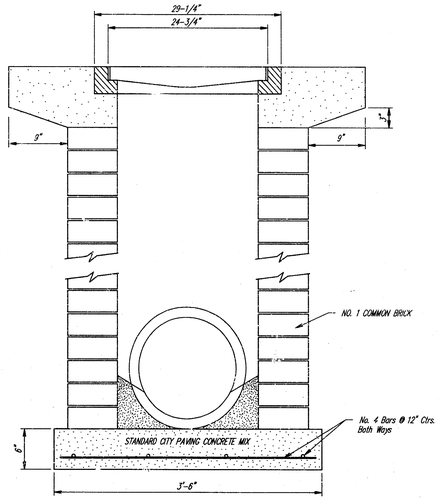

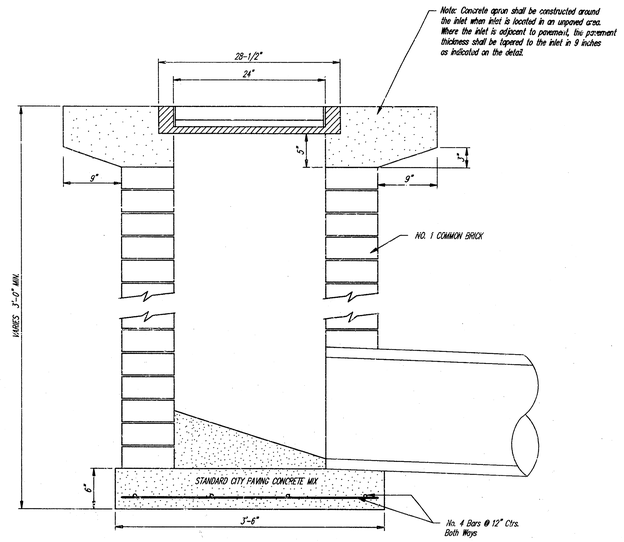

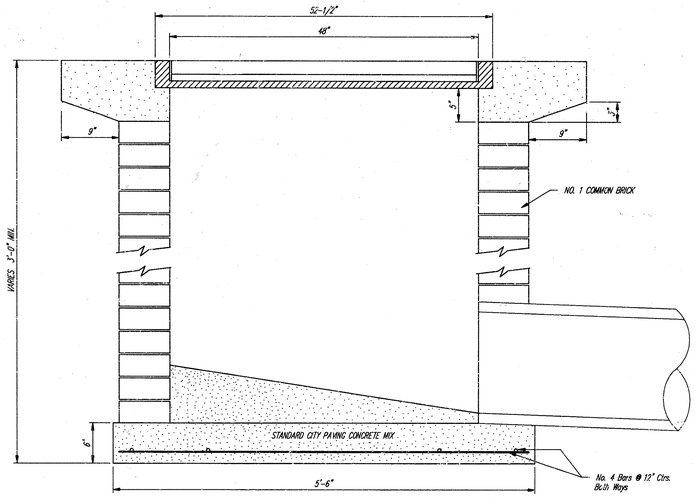

City of Wichita Standard
Drop Inlet

BAUGHMAN COMPANY P. A.
ENGINEERING, SURVEYING, & PLANNING
316-262-7271 • 315 ELLIS • WICHITA, KANSAS 67211

PROJECT NUMBER	SHEET
488-82705	9 OF 11

DESIGN	DRAWN	APPROVED	DATE	SCALE
C.O.W.	Staff			

DETAILS\DROPINT2

FHWA REGION NO.	STATE	PROJECT NO.	FISCAL YEAR	SHEET NO.	TOTAL SHEETS
7	KANSAS	468-82705		10	11

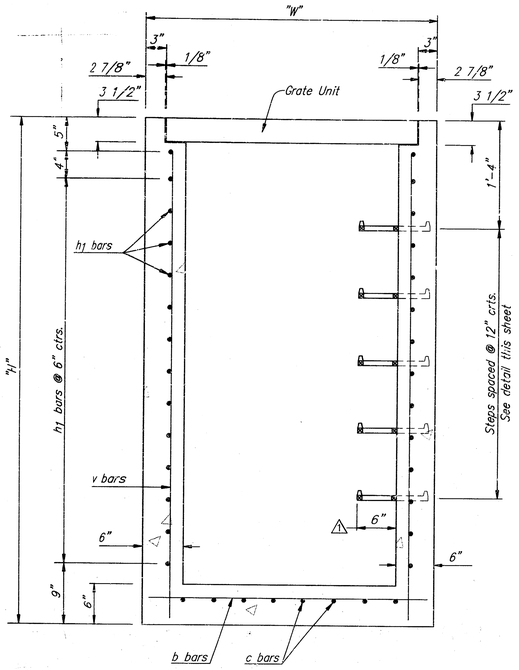

SECTION

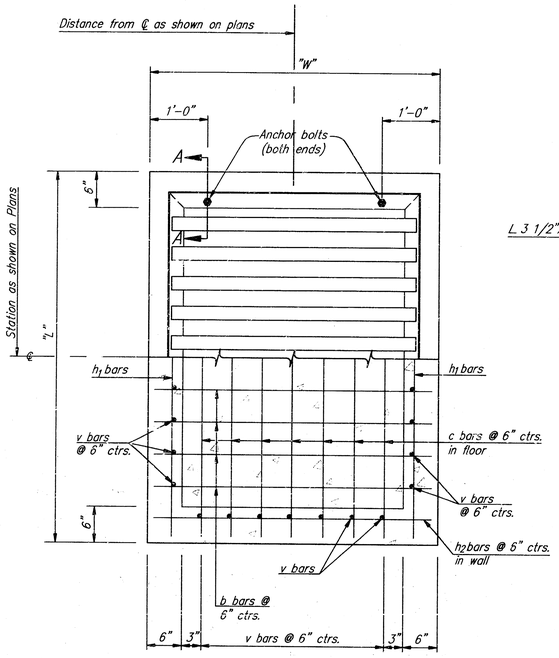

PLAN AND SECTION

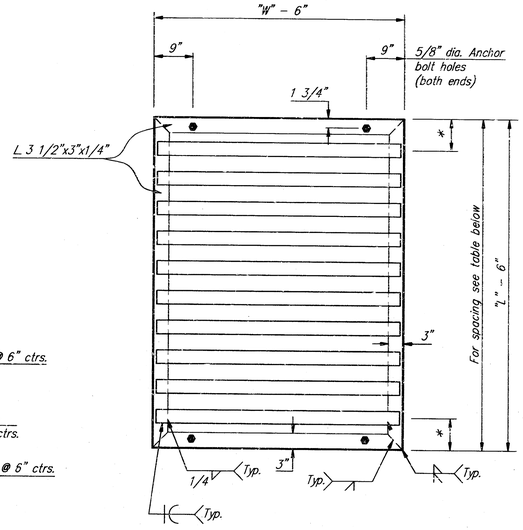

GRATE UNIT DETAILS

GENERAL NOTE

Use Class A Concrete throughout. All exposed edges shall be finished with an edging tool.

At the Contractors option, Class A Concrete (AE) or mix used in concrete pavement may be used throughout.

In general, pipes will enter and leave the manhole at various positions. Where possible bend bars around pipes.

Floor of inlet shall be shaped as shown in various "Examples" on Reinforced Concrete Manhole Standard No. 633. Concrete used for shaping shall be unreinforced Class "A" Concrete or concrete pavement mix. No addition in concrete quantities shall be made for shaping floor of inlets.

Manhole steps, where used, shall be placed to afford easy access to top of shaped invert.

No deductions in concrete quantities shall be made for pipe openings.

All bars are #4 @ 6" spacing and shall have a minimum clearance of 1 1/2" unless otherwise noted on the plans.

The top of the manhole shall be sloped slightly to approximately fit the ground line or other conditions as directed by the Engineer.

Steps shall be installed on all storm sewer inlets when specified in the plans or when "H" is equal or greater than six feet. Steps shall comply with KDOT Standard Specification.

The grate shall be fabricated from standard or commercial grade structural steel and black steel pipe. The unit shall be hot dipped, galvanized after fabrication, in accordance with ASTM A123 except the weight of coating shall average not less than 2.0 ounces per square foot of actual surface and no individual test shall show less than 1.8 ounces of coating per square foot of actual surface area.

** Unless otherwise provided for, quantities shown are for information only.

BILL OF MATERIALS FOR INLET-MANHOLE (SPECIAL)

"L" 4'-6"	"W" 4'-6"	"H" 5'-8"		"L" 5'-6"	"W" 5'-6"	"H" 5'-10"															
Bar	No.	Size	Length	Bar	No.	Size	Length	Bar	No.	Size	Length	Bar	No.	Size	Length	Bar	No.	Size	Length	Bar	No.	Size	Length
v	28	#4	5'-1.5"	v	36	#4	9'-3.5"	v		#4		v		#4		v		#4		v		#4	
c	7	#4	4'-3"	c	9	#4	5'-3"	c		#4		c		#4		c		#4		c		#4	
b	7	#4	4'-3"	b	9	#4	5'-3"	b		#4		b		#4		b		#4		b		#4	
h_1	22	#4	4'-3"	h_1	38	#4	5'-3"	h_1		#4		h_1		#4		h_1		#4		h_1		#4	
h_2	22	#4	4'-3"	h_2	38	#4	5'-3"	h_2		#4		h_2		#4		h_2		#4		h_2		#4	
Class "A" Conc.			1.86 Cu. Yd.	Class "A" Conc.			Cu. Yd.	Class "A" Conc.			Cu. Yd.	Class "A" Conc.			Cu. Yd.	Class "A" Conc.			Cu. Yd.	Class "A" Conc.			Cu. Yd.
Reinf. Steel			260.5 Lbs.	Reinf. Steel			553.1 Lbs.	Reinf. Steel			Lbs.	Reinf. Steel			Lbs.	Reinf. Steel			Lbs.	Reinf. Steel			Lbs.
Struct. Steel			260 Lbs.	Struct. Steel			370 Lbs.	Struct. Steel			Lbs.	Struct. Steel			Lbs.	Struct. Steel			Lbs.	Struct. Steel			Lbs.
Class III Excav.			4.25 Cu. Yd.	Class III Excav.			11 Cu. Yd.	Class III Excav.			Cu. Yd.	Class III Excav.			Cu. Yd.	Class III Excav.			Cu. Yd.	Class III Excav.			Cu. Yd.

BILL OF MATERIALS FOR INLET-MANHOLE (SPECIAL)

Bar	No.	Size	Length	Bar	No.	Size	Length	Bar	No.	Size	Length	Bar	No.	Size	Length	Bar	No.	Size	Length	Bar	No.	Size	Length
v		#4		v		#4		v		#4		v		#4		v		#4		v		#4	
c		#4		c		#4		c		#4		c		#4		c		#4		c		#4	
b		#4		b		#4		b		#4		b		#4		b		#4		b		#4	
h_1		#4		h_1		#4		h_1		#4		h_1		#4		h_1		#4		h_1		#4	
h_2		#4		h_2		#4		h_2		#4		h_2		#4		h_2		#4		h_2		#4	
Class "A" Conc.			Cu. Yd.	Class "A" Conc.			Cu. Yd.	Class "A" Conc.			Cu. Yd.	Class "A" Conc.			Cu. Yd.	Class "A" Conc.			Cu. Yd.	Class "A" Conc.			Cu. Yd.
Reinf. Steel			Lbs.	Reinf. Steel			Lbs.	Reinf. Steel			Lbs.	Reinf. Steel			Lbs.	Reinf. Steel			Lbs.	Reinf. Steel			Lbs.
Struct. Steel			Lbs.	Struct. Steel			Lbs.	Struct. Steel			Lbs.	Struct. Steel			Lbs.	Struct. Steel			Lbs.	Struct. Steel			Lbs.
Class III Excav.			Cu. Yd.	Class III Excav.			Cu. Yd.	Class III Excav.			Cu. Yd.	Class III Excav.			Cu. Yd.	Class III Excav.			Cu. Yd.	Class III Excav.			Cu. Yd.

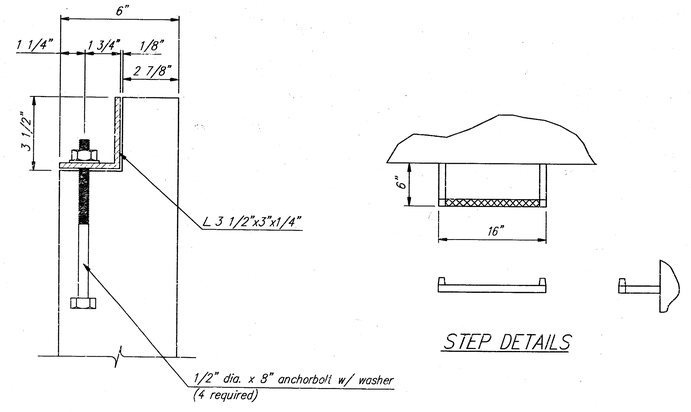

SECTION A-A

STEP DETAILS

PIPE DIMENSIONS AND SPACING

L x W	No. of Bars	Dia. x Length x Spacing	*
5'-6"x5'-6"	10	2 1/2"ø x 4'-4 1/4" pipes @ 5 1/2" ctrs.	5 1/4"
4'-6"x4'-6"	8	2 1/2"ø x 3'-10 1/4" pipes @ 5 1/2" ctrs.	4 3/4"

⚠ - Baughman Company Revision 3/1/95

INLET-MANHOLE (SPECIAL)

STD. NO. 648

KANSAS DEPARTMENT OF TRANSPORTATION

BAUGHMAN COMPANY P. A.
ENGINEERING & SURVEYING
316/262-7271 • 315 ELLIS • WICHITA, KANSAS 67211

DRAWN BY	DATE	JOB NO.	FILENAME
MSP			inletmh

BUCKHEAD 2ND ADDITION

WICHITA, SEDGWICK COUNTY, KANSAS

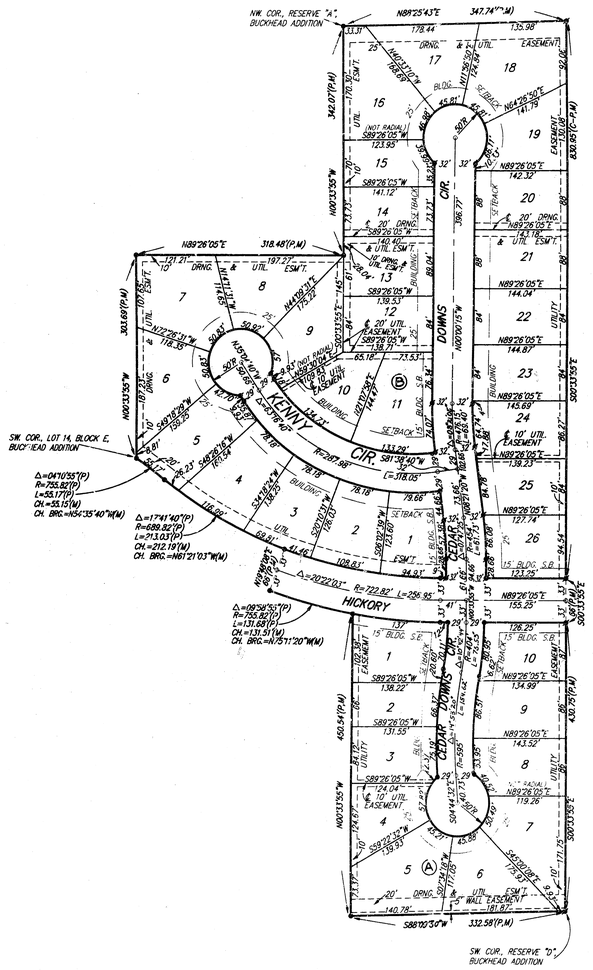

100 0 100

● = ½ REBAR W/ "BAUGHMAN" CAP (SET)
⧓ = ½ REBAR W/ "BAUGHMAN" CAP (FOUND)

(M) = MEASURED
(P) = PLATTED
(C-P) = CALCULATED PER PLATTED INFO.

MINIMUM BUILDING PAD ELEVATIONS FOR LOWEST OPENING OF STRUCTURE

Lots	Block	Elevation	
		M.S.L.	City Datum
7–10	1	1339.40	152.00
18–26	2	1336.40	149.00

BENCHMARK:
119TH ST. W. & CENTRAL, CITY DISC, 40' E & 46' S OF ℄ BOTH. ELEV = 156.93 CITY DATUM (1344.33 M.S.L.)

"T" CUT - TOP OF CURB, N. SIDE OF HICKORY ST., 56.5' EAST OF ℄ 119TH ST. W. ELEV. = 158.97 CITY DATUM (1346.37 M.S.L.)

State of Kansas)
Sedgwick County) SS We, Baughman Company, P.A., Surveyors in aforesaid County and State do hereby certify that we have surveyed and platted "BUCKHEAD 2ND ADDITION", Wichita, Sedgwick County, Kansas and that the accompanying plat is a true and correct exhibit of the property surveyed, described as and being a replat of Lots 1, 2, 3, 4, 5, 6, 7, 8, 9, and 10, Block C, together with Lots 1, 2, 3, 4, 5, 6, 7, 8, 9, 10, 11, 12, 13, 14, 15, 16, 17, 18, and 19, Block E, together with the west 347.68 feet of Reserve "A", together with Kenny Circle, that part of Cedar Downs Circle lying south of Hickory, that part of Cedar Downs Circle lying north of Hickory, and that part of Hickory lying west of the west line of Reserve "D" as extended north, all as platted in Buckhead Addition, Wichita, Sedgwick County, Kansas.

All being situated in the SE1/4 of Sec. 13, Twp. 27-S, R-2-W of the 6th P.M., Sedgwick County, Kansas.

Existing public easements and dedications being vacated by virtue of K.S.A. 12-512(b).

Baughman Company, P.A.

Michael D. Conrey — Michael C. Conrey — LS-972 — 2-28-97 — Surveyor

MICHAEL C. CONREY REGISTERED KANSAS LAND SURVEYOR

Know all men by these presents that we, the undersigned, have caused the land in the surveyors certificate to be platted into Lots, Blocks, and Streets, to be known as "BUCKHEAD 2ND ADDITION", Wichita, Sedgwick County, Kansas. The utility easements are hereby granted as indicated for the construction and maintenance of all public utilities. The wall easement is hereby granted as indicated for the construction and maintenance of a private wall and utility main lines and service lines shall be allowed to cross this easement. The drainage and utility easements are hereby granted as indicated for drainage purposes and for the construction and maintenance of all public utilities. The streets are hereby dedicated to and for the use of the public. The Minimum Building Pad Elevations for the lowest opening to the structures shall be as shown on the face of the plat.

Paul E. Kelsey — Paul E. Kelsey

State of Kansas)
Sedgwick County) SS The foregoing instrument acknowledged before me, this 14th day of MARCH, 1997, by Paul E. Kelsey, a single person.

Philip J. Meyer — PHILIP J. MEYER, Notary Public

My App't. Exp. 5/5/97

PHILIP J. MEYER NOTARY PUBLIC STATE OF KANSAS

We, the undersigned, holders of a mortgage on the above described property, do hereby consent to this plat of "BUCKHEAD 2ND ADDITION", Wichita, Sedgwick County, Kansas.

Prairie State Bank

MIKE S. SIKES — VICE-President

State of Kansas)
Sedgwick County) SS The foregoing instrument acknowledged before me, this 13th day of March, 1997, by MIKE S. SIKES VICE-President of Prairie State Bank, on behalf of the bank.

My App't. Exp. 06-15-99 — Kimberly A. Hommertzheim, Notary Public

Kimberly A Hommertzheim Notary Public - State of Kansas My Appt. Expires 06-15-99

This plat of "BUCKHEAD 2ND ADDITION", Wichita, Sedgwick County, Kansas has been submitted to and approved by the Wichita-Sedgwick County Metropolitan Area Planning Commission, Wichita, Kansas.

Dated this 28th day of December, 1995.

Wichita-Sedgwick County Metropolitan Area Planning Commission

Susan Osborne-Howes, Chair

Marvin S. Krout, Secretary

This plat approved and all dedications shown hereon accepted by the City Council of the City of Wichita, Kansas, this 15th day of APRIL, 1997.

Bob Knight, Mayor

Pat Burnett, City Clerk

Entered on transfer record this _____ day of _____, 1997.

_____, County Clerk
James Alford

State of Kansas)
Sedgwick County) SS This is to certify that this plat has been filed for record in the office of the Register of Deeds, this ____ day of _____, 1997, at ____ o'clock ____ M, and is duly recorded.

_____, Register of Deeds
Larry Consolver

_____, Deputy
Michael D. Hurtt

F-1-5-97

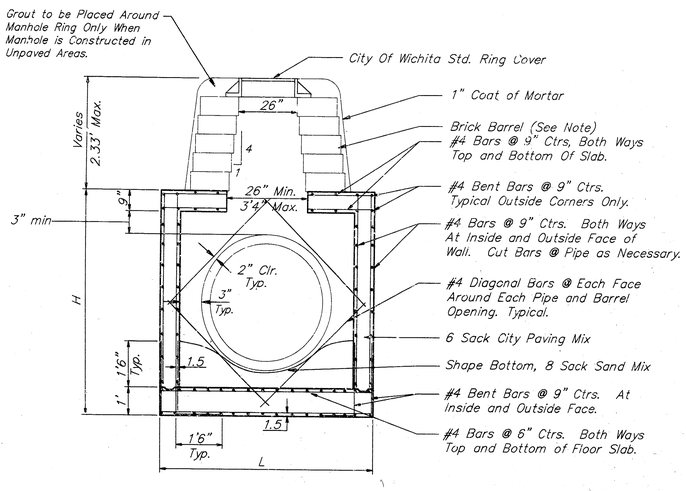

REINFORCED CONCRETE MANHOLE

DEPTH OF STACK: 0' TO 2.33'

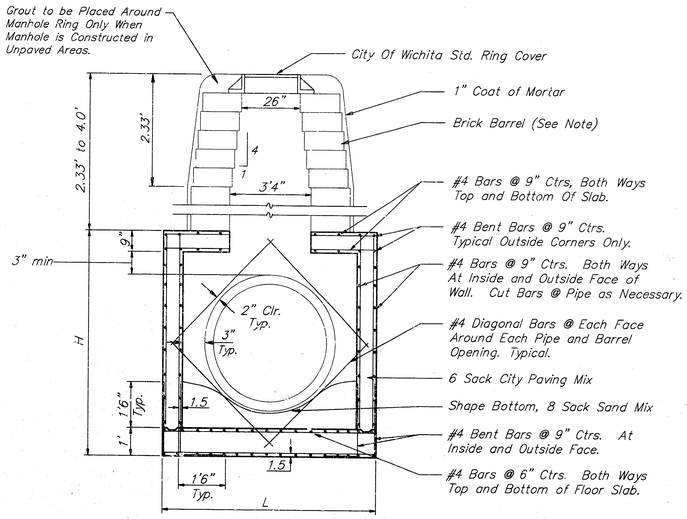

REINFORCED CONCRETE MANHOLE

DEPTH OF STACK: 2.33' TO 4.0'

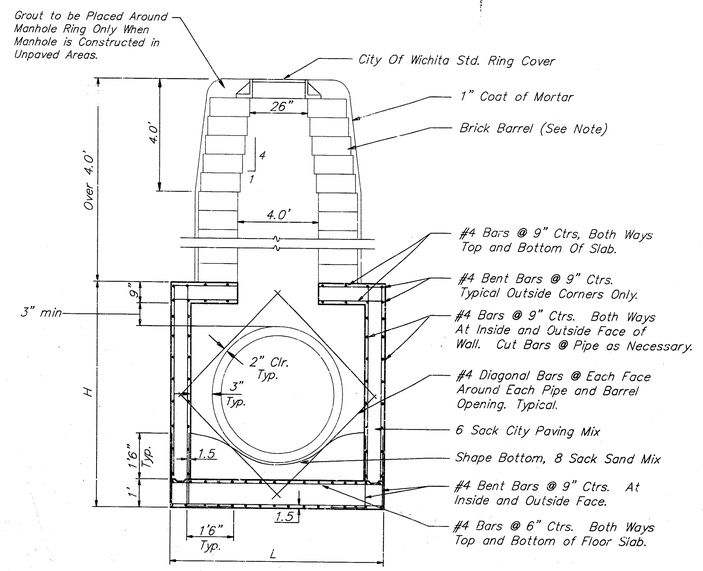

REINFORCED CONCRETE MANHOLE

DEPTH OF STACK: OVER 4.0'

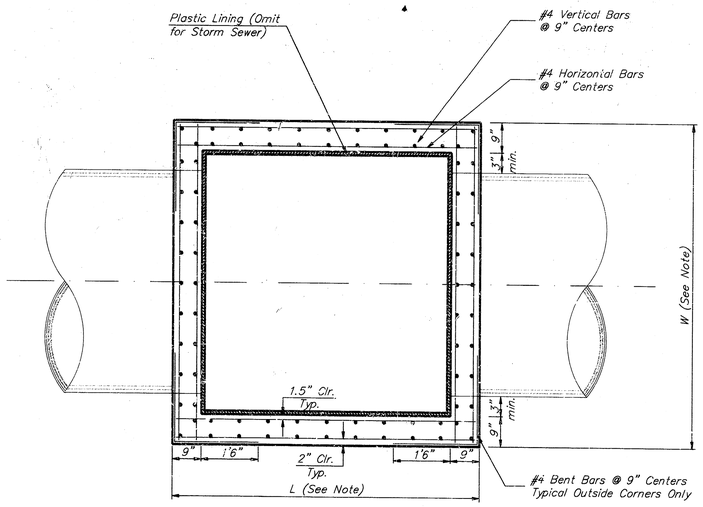

TOP VIEW

Note:

Brick barrels less than 16' deep shall have 8" walls except when located within public street or alley pavement; then the wall shall be 12". Brick barrels more than 16' deep shall have 12" walls. The "L" and "W" dimensions shall be a minimum of 5'6" for brick barrels with 8" walls and 6'2" for brick barrels with 12" walls when the brick barrels are over 4' in height. Completed manhole shall be without leaks and watertight.

CITY OF WICHITA STANDARD

REINFORCED CONCRETE MANHOLE

BAUGHMAN COMPANY P. A.

ENGINEERING, SURVEYING, & PLANNING

316-262-7271 • 315 ELLIS • WICHITA, KANSAS 67211

PROJECT NUMBER					SHEET
468-82705					11a of 12
DESIGN C.O.W.	DRAWN Staff	APPROVED	DATE	SCALE	