STORM WATER SEWER PLANS FOR

OAK RIDGE SECOND ADDITION

SWS #491

PROJECT NO. 468-82725

CITY OF WICHITA, KANSAS

MICHAEL E. LINDEBAK, CITY ENGINEER

INDEX CODE 751057

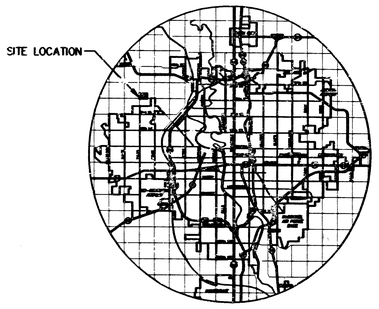

LOCATION MAP

INDEX TO DRAWINGS

SHEET NO.	DESCRIPTION
1	TITLE SHEET
2-3	LINE 1
4	LINES 2 & 3
5	LINE 4
8-11	INLET DETAILS
12-13	MANHOLE DETAILS
14	FINAL PLAT

GENERAL NOTES

1. THE CONTRACTOR SHALL BE RESPONSIBLE FOR PRESERVING PROPERTY IRONS. THE CONTRACTOR WILL BE REQUIRED TO RE-ESTABLISH ANY PROPERTY IRONS WHICH ARE DAMAGED OR DESTROYED BY HIS CONSTRUCTION OPERATIONS. SUCH IRONS SHALL BE RE-ESTABLISHED BY A LICENSED LAND SURVEYOR IN ACCORDANCE WITH STATE LAWS.

2. EXISTING UTILITIES AND THEIR LOCATIONS, AS SHOWN ON THE PLANS REPRESENT THE BEST INFORMATION OBTAINABLE FOR DESIGN. LOCATION INFORMATION HAS BEEN OBTAINED FROM THE VARIOUS UTILITY COMPANIES AND IS EITHER FROM COMPANY RECORD DRAWINGS OR COMPANY PROVIDED FIELD LOCATIONS. THE PLAN LOCATIONS SHOWN ARE NOT GUARANTEED. ADDITIONAL EXISTING UTILITIES MAY ALSO BE ENCOUNTERED.

3. CONTRACTOR WILL BE REQUIRED TO PROVIDE A MINIMUM ADVANCE NOTICE OF FORTY-EIGHT (48) HOURS TO UTILITY COMPANIES PRIOR TO STARTING ANY EXCAVATION AS FOLLOWS:

KANSAS ONE-CALL	687-2470
	OR 687-2470 (LOCAL WICHITA)

4. THE CONTRACTOR MUST NOTIFY THE FOLLOWING IN CASE OF EMERGENCY:

CABLEVISION	263-2061
KG&E (GAS & ELECTRIC)	383-8600
SOUTHWESTERN BELL TELEPHONE COMPANY	1-800-734-7590
CITY OF WICHITA WATER & SEWER MAINT.	268-4908
PEOPLES GAS COMPANY	946-0096

5. RUBBLE FROM THE REMOVAL OF MISCELLANEOUS STRUCTURES AND EXCESS EXCAVATION WHICH IS TO BE WASTED SHALL BE DISPOSED OF ON SITES TO BE PROVIDED BY THE CONTRACTOR. THESE SITES SHALL BE APPROVED BY THE ENGINEER AS TO SUITABILITY, APPEARANCE AND SITE LOCATION. LOCATIONS THAT, IN THE OPINION OF THE ENGINEER, WILL LEAVE AN UNSIGHTLY APPEARANCE WILL NOT BE APPROVED. ALL DIPOSAL SITES MUST BE APPROVED BY THE KANSAS DEPARTMENT OF HEALTH AND ENVIRONMENT. MATERIAL EITHER STOCKPILED OR DISPOSED OF IN A FLOOD PLAIN WOULD REQUIRE A KANSAS STATE BOARD OF AGRICULTURE PERMIT. ANY MATERIAL DUMPED IN WATERS OF THE UNITED STATES OR WETLANDS IS SUBJECT TO U.S. CORPS OF ENGINEERS PERMITTING REGULATIONS. ANY MATERIAL BURIED OR STOCKPILED BEYOND APPROVED CONSTRUCTION LIMITS WOULD REQUIRE ADDITIONAL ARCHAEOLOGICAL INVESTIGATIONS UNLESS BURIED IN A PREVIOUSLY APPROVED BORROW LOCATION.

6. COST OF EXCAVATION, HAULING, AND DUMPING OF EXCESS EXCAVATION SHALL BE SUBSIDIARY TO THE PROJECT.

7. TREES AND SHRUBS IN PUBLIC RIGHT-OF-WAY WHICH ARE IN DIRECT CONFLICT WITH PROPOSED NEW CONSTRUCTION SHALL BE REMOVED BY THE CONTRACTOR WITH THE ENGINEER'S APPROVAL. TREES AND SHRUBS WHICH ARE NOT IN DIRECT CONFLICT WITH PROPOSED NEW CONSTRUCTION SHALL BE SAVED AND PROTECTED FROM DAMAGE.

8. ALL DISTURBED AREAS TO BE SEEDED WITH RYE GRASS AT A RATE OF 200 LBS./ ACRE WITHIN 10 DAYS OF CONSTRUCTION. COST SHALL BE SUBSIDIARY TO PROJECT.

9. THE TOPS OF INLETS AND MANHOLES AS NOTED ON THE PLANS MAY VARY SO AS TO MEET PROPOSED TOP OF CURB ELEVATIONS OR PAVEMENT ELEVATIONS. THE FIELD ENGINEER SHALL LOCATE INLETS AND MANHOLES WITH REFERENCE TO PROPOSED PAVING PLANS OF THE PERTINENT STREETS.

10. ALL CONCRETE SHALL BE STANDARD PAVING MIX UNLESS OTHERWISE NOTED.

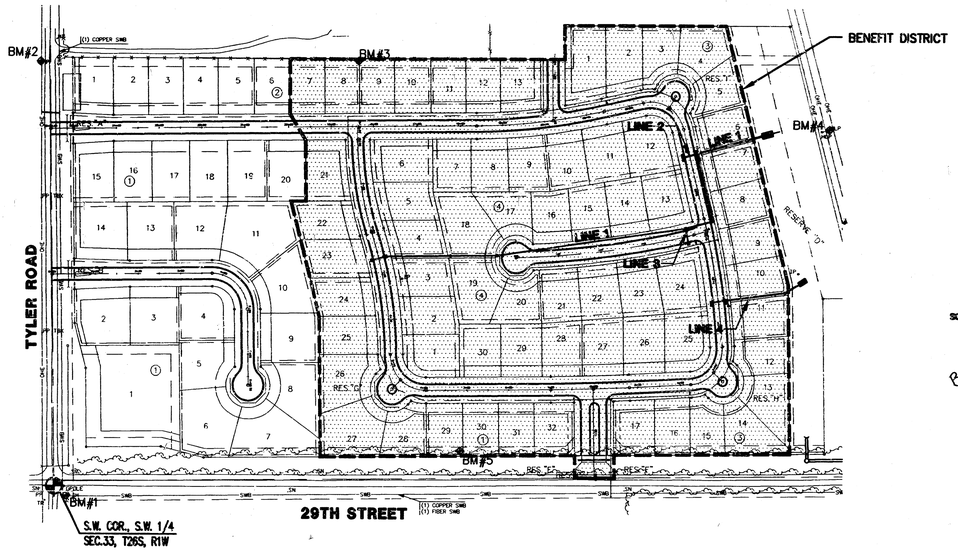

BOOKED 2-3-98 MCG D-377

BENCHMARKS

BM#1 C.O.W. BENCHMARK
SE CORNER INTERSECTION TYLER & 29TH.
32.3' S. & 30' E. OF C/L BOTH. 55.5' E OF P.P. 9.2' SE OF P.P. 43.2' SE OF IRON AT SECTION CORNER.
ELEV. = 178.04

BM#2 RR SPIKE IN THE SOUTH FACE OF P.P. WEST SIDE OF TYLER RD. WEST OF THE N.W. CORNER OF OAK RIDGE 2ND.
ELEV. = 174.94

BM#3 TOP OF "T" POST 1.5' SOUTH OF THE NE CORNER LOT 8, BLOCK 2.
ELEV. = 182.77

BM#4 R.R. SPIKE IN S.W. FACE OF WEST H POLE IN THE N.E. CORNER OF OAK RIDGE 2ND.
ELEV. = 158.55

BM#5 TOP OF "T" POST 5' NORTH OF S.E. CORNER LOT 29, BLOCK 1
ELEV. = 184.49

GREGORY J. ALLISON LICENSED PROFESSIONAL ENGINEER 11190 STATE OF KANSAS 9/9/97

MID-KANSAS ENGINEERING CONSULTANTS, INC.
411 N. WEBB ROAD
WICHITA, KS. 67206
316-684-9600

OAK RIDGE SECOND ADDITION
PROJECT NAME

STORM WATER SEWER PLANS
SHEET TITLE

GJA	BSH/KKL/BDM	GJA
DESIGN BY:	DRAWN BY:	CHECKED BY:
SEPTEMBER 1997	96167DT	1 / 14
DATE	JOB NO.	SHEET/OF

I:\CIVIL\96167\SWS\96167DT Tue Sep 09 10:55:53 1997

OAK RIDGE 2ND ADDITION
STORM WATER SEWER PLANS
LINE 1

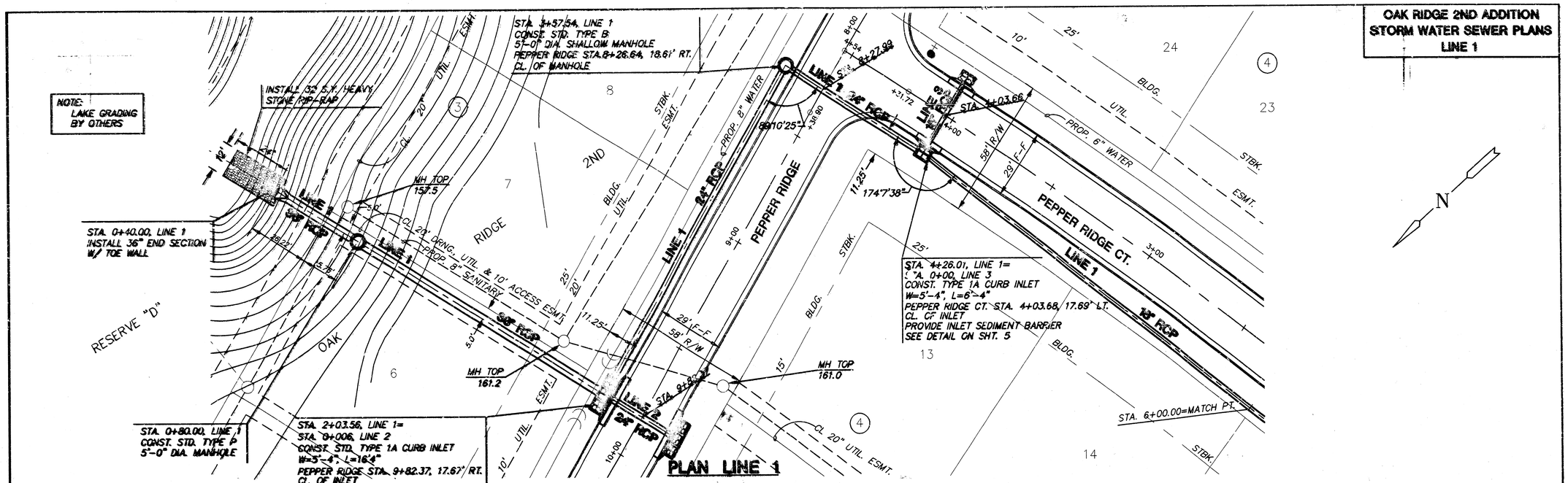

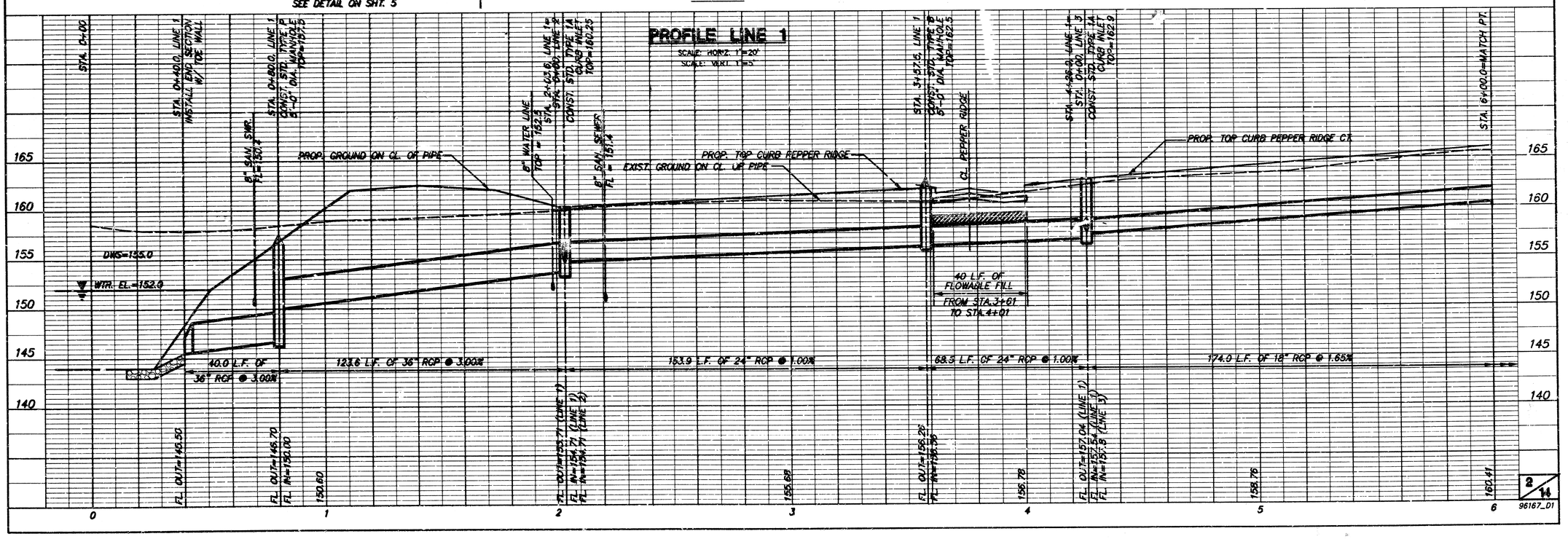

96167_D1

I:\CIVIL\96167\DWG\96167_D1 Tue Sep 09 09:55:38 1997

OAK RIDGE 2ND ADDITION
STORM WATER SEWER PLANS
LINE 1 CONT.

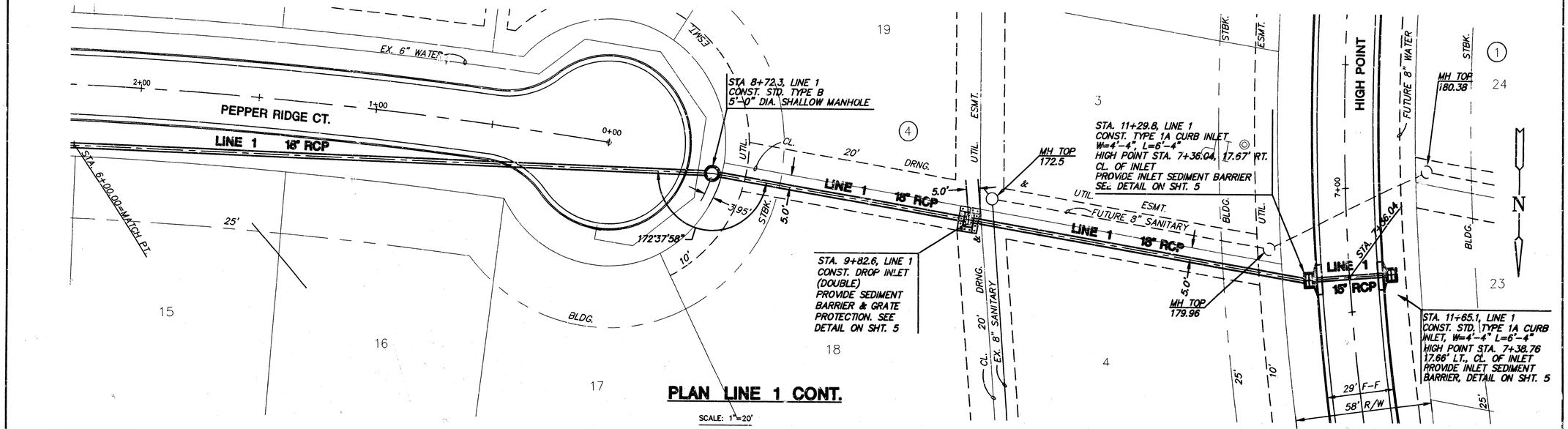

PLAN LINE 1 CONT.

SCALE: 1"=20'

PROFILE LINE 1 CONT.

SCALE: HORIZ. 1"=20'
SCALE: VERT. 1"=5'

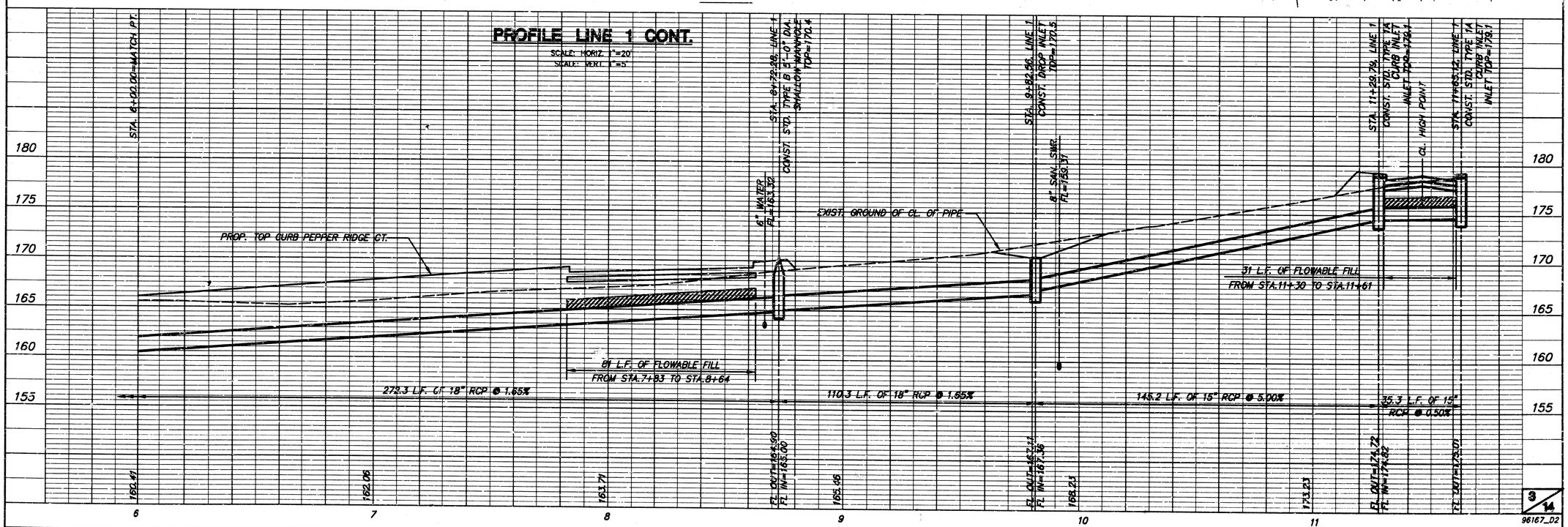

96167_D2

I:\CIVIL\96167\SWS\96167_D2 Tue Sep 09 10:34:46 1997

OAK RIDGE 2ND ADDITION STORM WATER SEWER PLANS LINE 2 AND LINE 3

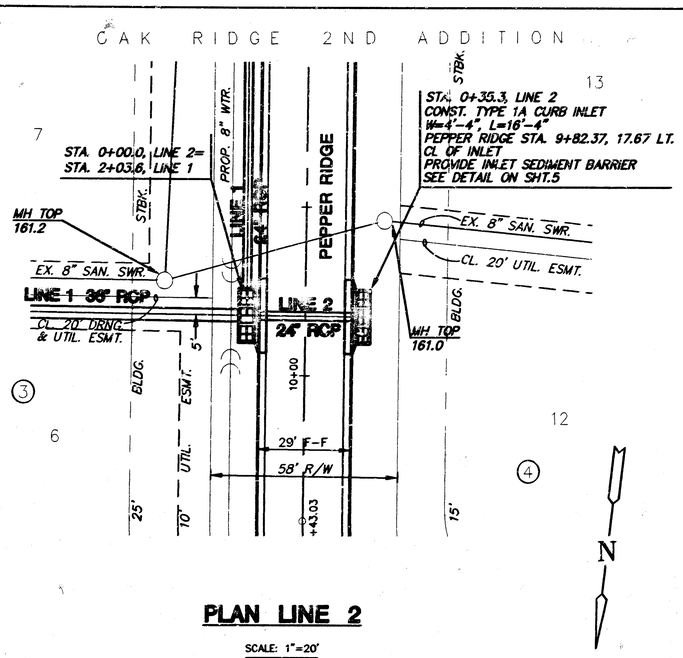

PLAN LINE 2

SCALE: 1"=20'

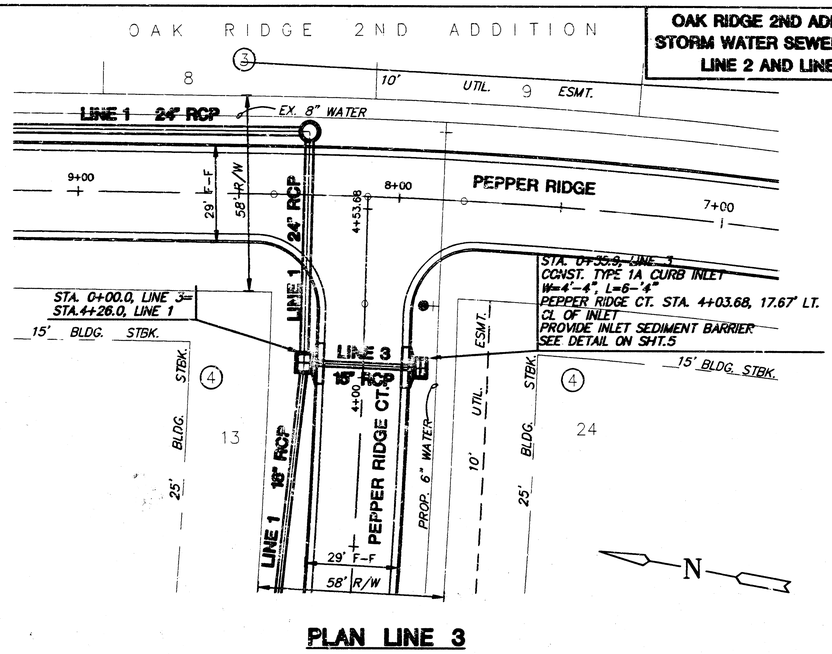

PLAN LINE 3

SCALE: 1"=20'

PROFILE LINE 2

SCALE: HORIZ. 1"=20'
SCALE: VERT. 1"=5'

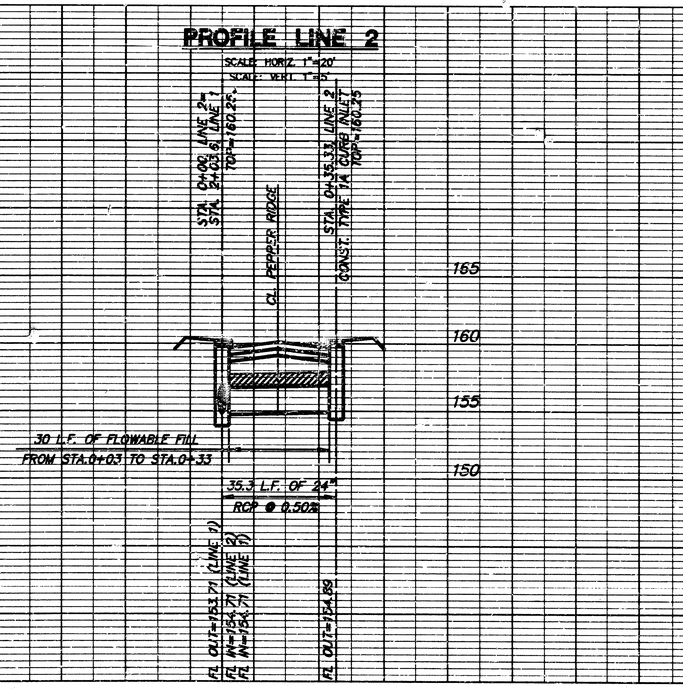

PROFILE LINE 3

SCALE: HORIZ. 1"=20'
SCALE: VERT. 1"=5'

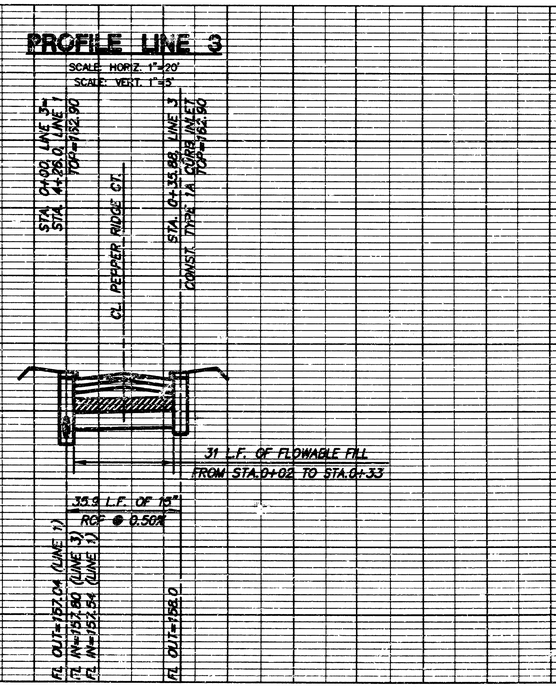

96186_03

I:\CIVIL\96167\SHS\96167_D3 Tue Sep 09 09:57:03 1997

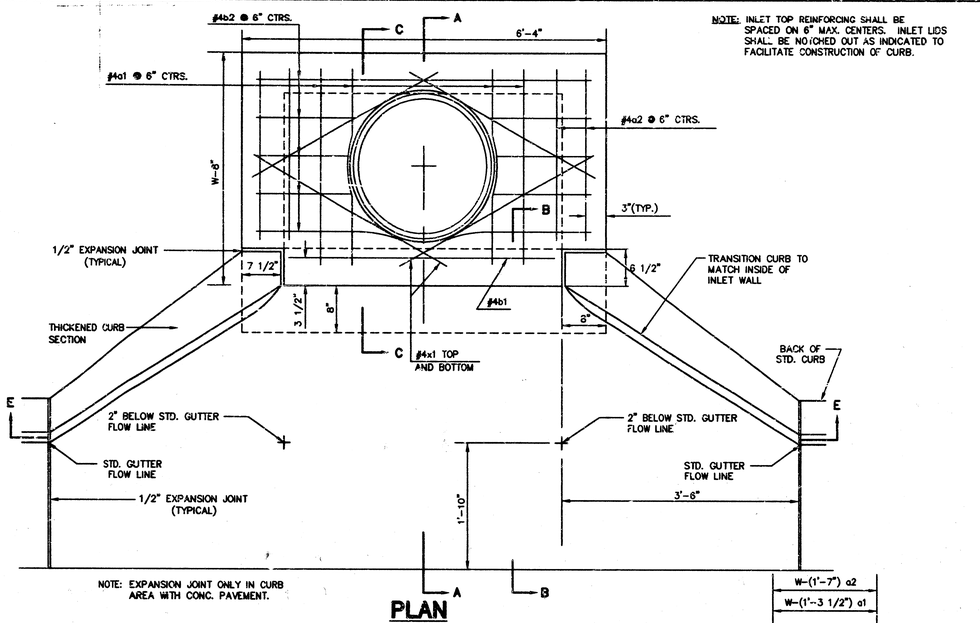

NOTE: INLET TOP REINFORCING SHALL BE SPACED ON 6" MAX. CENTERS. INLET LIDS SHALL BE NOTCHED OUT AS INDICATED TO FACILITATE CONSTRUCTION OF CURB.

NOTE: EXPANSION JOINT ONLY IN CURB AREA WITH CONC. PAVEMENT.

PLAN

BENDING DIAGRAM

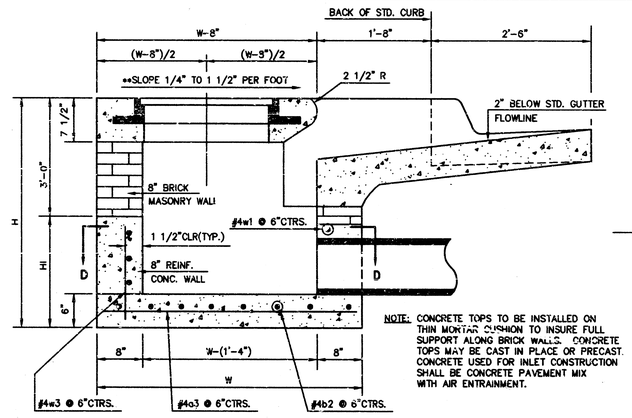

SECTION A-A

NOTE: CONCRETE TOPS TO BE INSTALLED ON THIN MORTAR CUSHION TO INSURE FULL SUPPORT ALONG BRICK WALLS. CONCRETE TOPS MAY BE CAST IN PLACE OR PRECAST. CONCRETE USED FOR INLET CONSTRUCTION SHALL BE CONCRETE PAVEMENT MIX WITH AIR ENTRAINMENT.

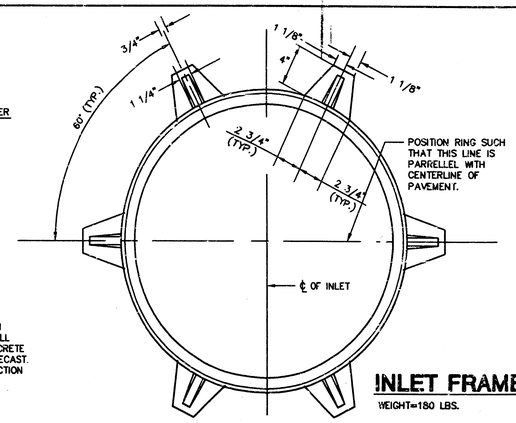

INLET FRAME

WEIGHT=180 LBS.

NOTE: CONTRACTOR SHALL HAVE THE OPTION OF CONSTRUCTING 8" BRICK MASONRY WALLS BETWEEN THE CONCRETE INLET BASE AND TOP ON THIS INLET WHEN W=6'-4" AND H=7'-0" OR LESS.

ADDITIONAL CURB AND GUTTER CONSTRUCTION NECESSARY TO CONNECT SET-BACK INLET TO PAVEMENT WILL BE PAID FOR AT THE UNIT PRICE BID FOR EACH INLET HOOKUP.

INLET INVERT SHALL BE SHAPED WITH 8 SACK SAND MIX CONCRETE TO CREATE FLOW CHANNELS AND TO INCREASE HYDRAULIC EFFICIENCY SUCH THAT THE INLET WILL BE SELF CLEANING BETWEEN ALL INLET AND/OR OUTLET PIPES.

THE ENDS OF ALL PIPES INSTALLED IN INLETS SHALL BE CUT OFF FLUSH WITH THE INSIDE FACE OF THE INLET WALL.

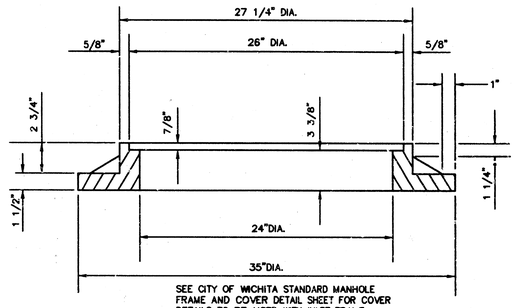

SEE CITY OF WICHITA STANDARD MANHOLE FRAME AND COVER DETAIL SHEET FOR COVER DETAILS TO BE USED WITH INLET FRAME.

PRECAST SLAB AND FLOOR REINFORCING

		W=4'-4"		W=5'-4"		W=6'-4"		W=7'-4"		W=8'-4"	
MARK	SIZE	NO.	LENGTH	NO.	LENGTH	NO.	LENGTH	NO.	LENGTH	NO.	LENGTH
*a1	#4	6	6'-7"	6	8'-7"	6	10'-7"	6	12'-7"	6	14'-7"
a2	#4	4	6'-0"	4	8'-0"	4	10'-0"	4	12'-0"	4	14'-0"
a3	#4	13	4'-1"	13	5'-1"	13	6'-1"	13	7'-1"	13	8'-1"
b1	#4	1	4'-9"	1	4'-9"	1	4'-9"	1	4'-9"	1	4'-9"
*b2	#4	23	6'-1"	29	8'-1"	35	6'-1"	41	6'-1"	47	6'-1"
x1	#4	8	3'-10"	8	4'-2"	8	4'-6"	8	4'-10"	8	5'-2"

WALL REINFORCING

		W=4'-4"		W=5'-4"		W=6'-4"		W=7'-4"		W=8'-4"	
MARK	SIZE	NO.	LENGTH	NO.	LENGTH	NO.	LENGTH	NO.	LENGTH	NO.	LENGTH
w1	#4	①	6'-1"	①	6'-1"	①	6'-1"	①	6'-1"	①	6'-1"
w2	#4	①	4'-1"	①	5'-1"	①	6'-1"	①	7'-1"	①	8'-1"
w3	#4	32	②	36	②	40	②	44	②	48	②

* FIELD BEND OR CUT REINFORCING AS REQUIRED FOR CLEARANCE
① 4(HI-12"); (HI-12") ROUND DOWN TO NEAREST 0.5'
② HI-3"

STANDARD CURB INLET PRECAST TOPS			
W	PRE-CAST TOP SIZE	PIPE SIZE	CU. YD. CONC.
4'-4"	3'-8"x6'-4"x7 1/2"	21" & SMALLER	0.38±
5'-4"	4'-8"x6'-4"x7 1/2"	24" & 30"	.51±
6'-4"	5'-8"x6'-4"x7 1/2"	36" & 42"	.64±
7'-4"	6'-8"x6'-4"x7 1/2"	48" & 54"	.77±
8'-4"	7'-8"x6'-4"x7 1/2"	60" & 66"	.90±

**NOTE: SLOPE OF INLET TOPS TO MATCH SIDEWALK OR PARKING SLOPES WITHIN LIMITS INDICATED.

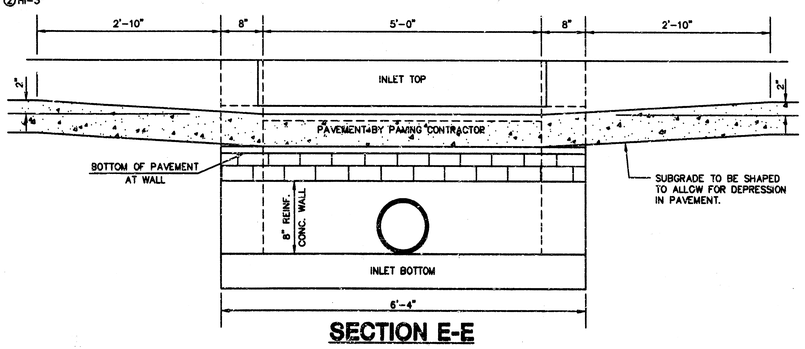

SECTION E-E

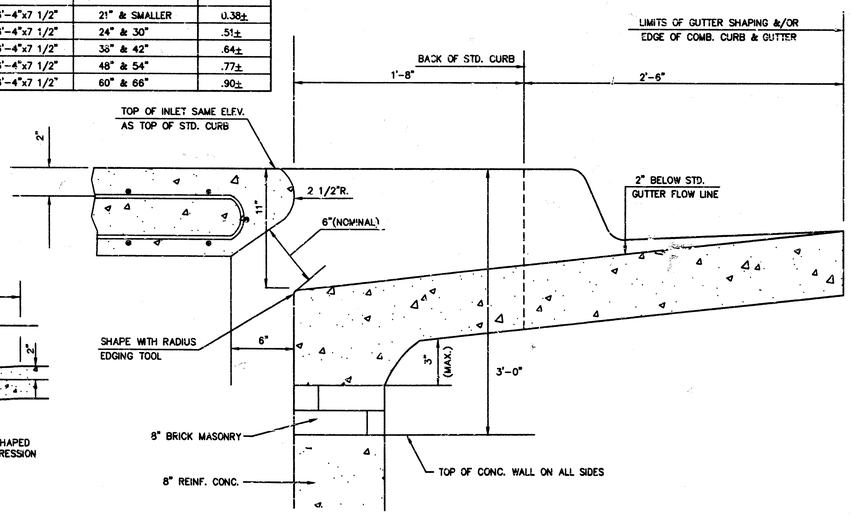

SECTION B-B

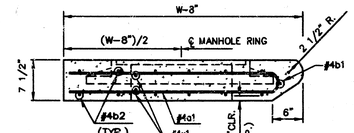

SECTION C-C

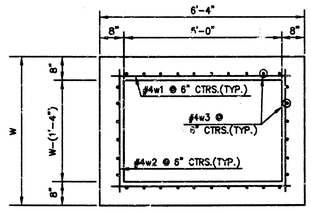

SECTION D-D

REVISED: 2-16-88 C.O.W.

STANDARD TYPE 1A CURB INLET

INLET OPENING=6"x5'-0"

JUNE 1984

CITY OF WICHITA, KANSAS

Design C.O.W.	Checked by	Checked by	
Drawn by	Date	Date SEPT. 1997	Job No. 96167D01

I:\CIVIL\96167\SHS\96167D01 Thu Sep 04 15:42:59 1997

OAK RIDGE 2ND ADDITION
STORM WATER SEWER PLANS
LINE 4

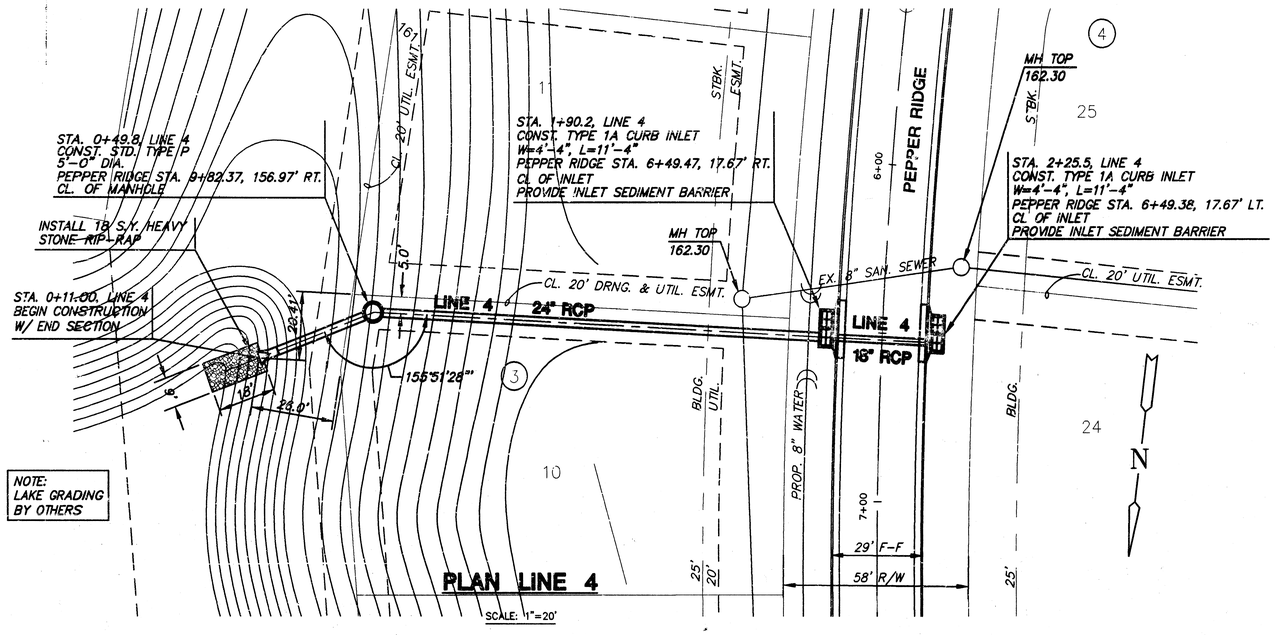

PLAN LINE 4

SCALE: 1"=20'

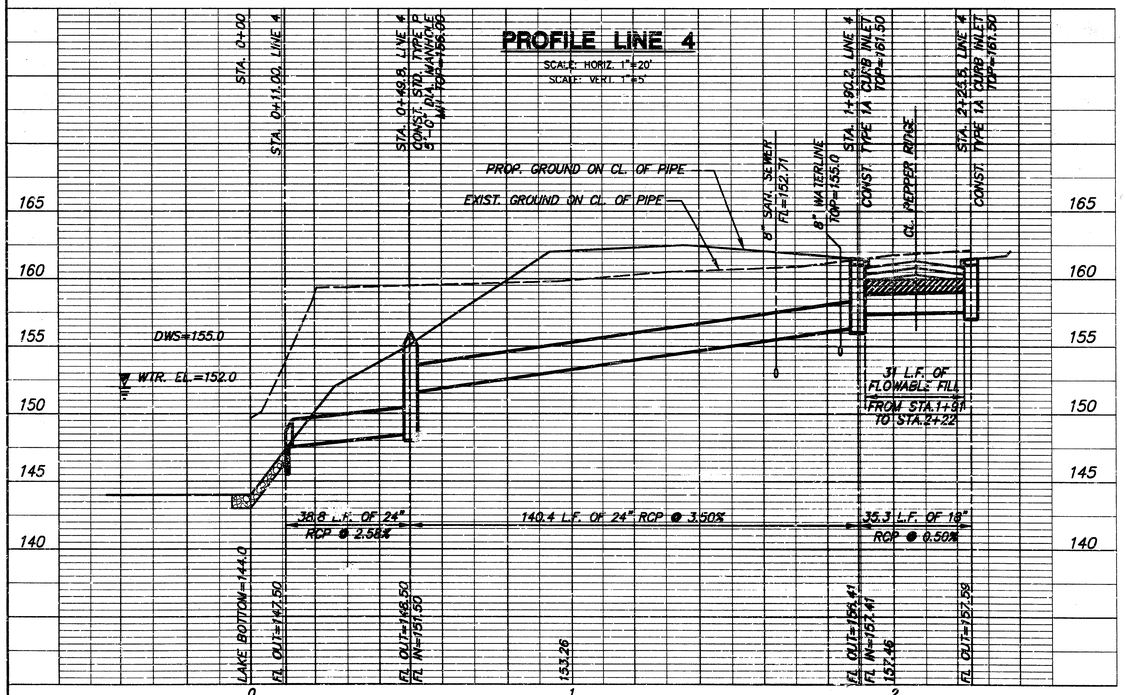

PROFILE LINE 4

SCALE: HORIZ. 1"=20'
SCALE: VERT. 1"=5'

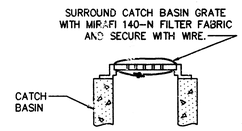

GRATE PROTECTION DETAIL

NO SCALE

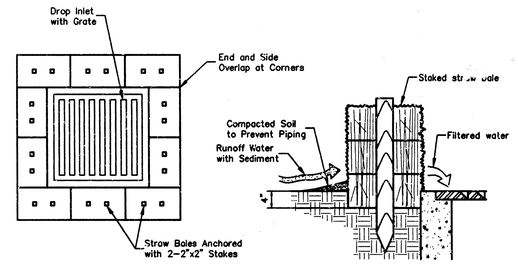

STRAW BALE DROP INLET SEDIMENT BARRIER

Note: Wedge loose straw between bales to prevent water from flowing between bales.

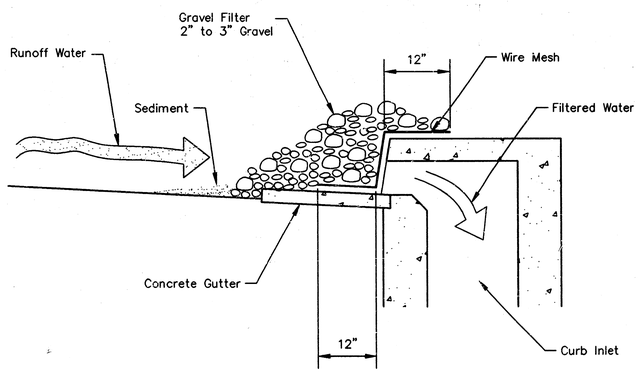

GRAVEL CURB INLET SEDIMENT BARRIER

NO SCALE

I:\CIVIL\96186\SWS\96186_D4 Tue Sep 09 10:35:52 1997

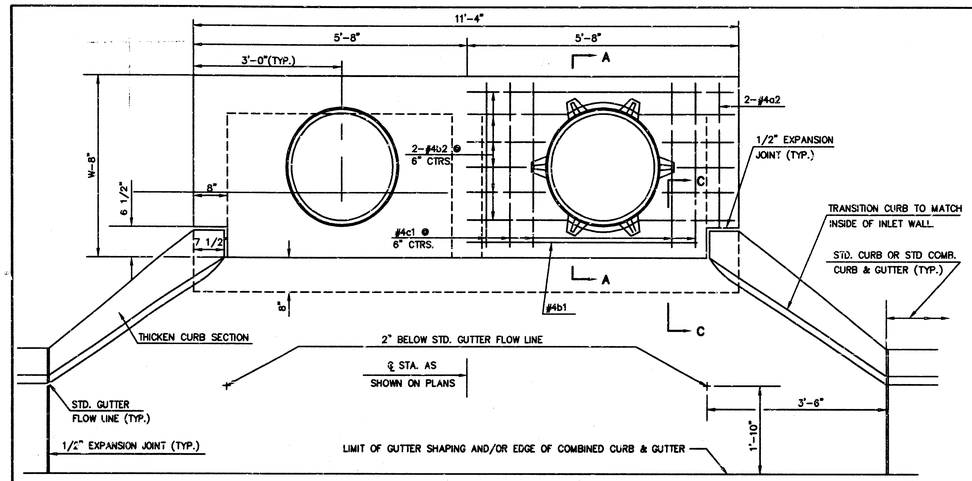

SLAB REINFORCING NOT SHOWN

PLAN

SHOWING SLAB REINFORCING

NOTE EXPANSION JOINT ONLY IN CURB AREA WITH CONCRETE PAVEMENT.

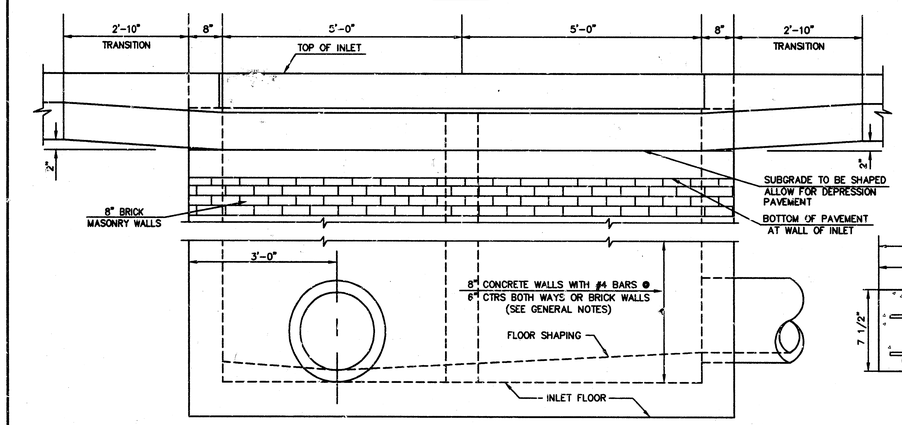

ELEVATION

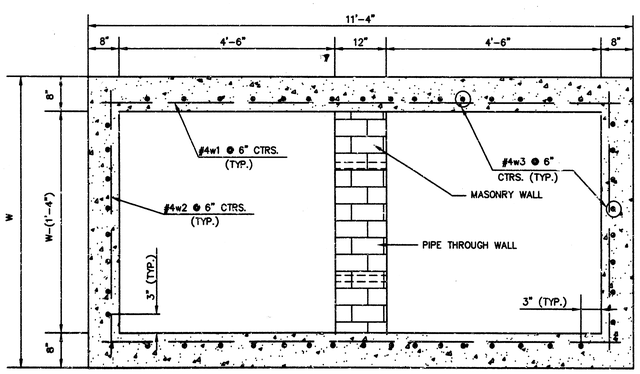

SECTION B-B

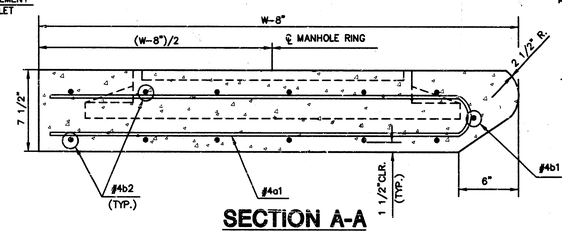

SECTION A-A

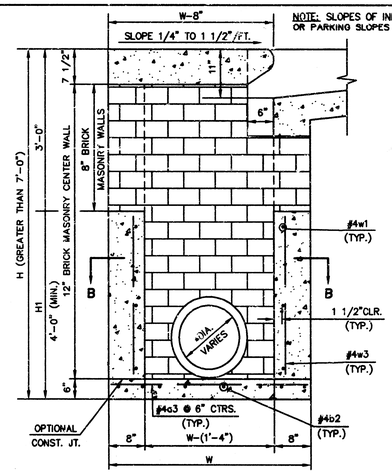

TYPICAL INLET SECTION AT CENTER WALL

(REINFORCED CONCRETE WALLS)

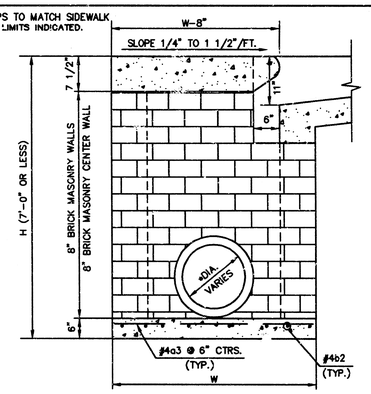

TYPICAL INLET SECTION AT CENTER WALL

(MASONRY WALLS)

- A CENTER WALL OPENING SHALL BE PROVIDED BY MEANS OF A SECTION OF REINFORCED CONCRETE PIPE. SEE CASE I AND CASE II BELOW.

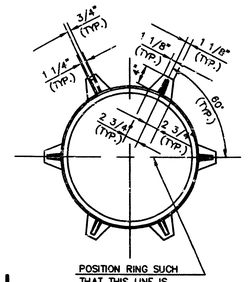

POSITION RING SUCH THAT THIS LINE IS PARALLEL WITH ℄ OF PAVEMENT

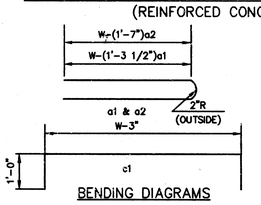

BENDING DIAGRAMS

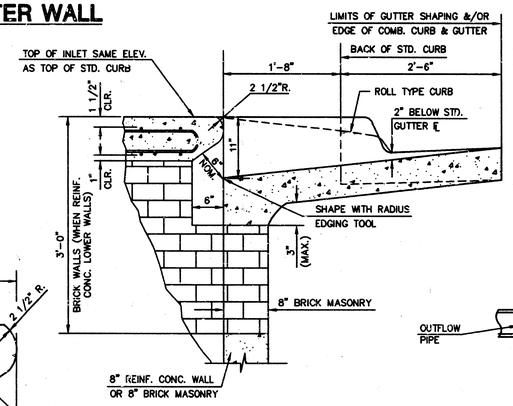

SECTION C-C

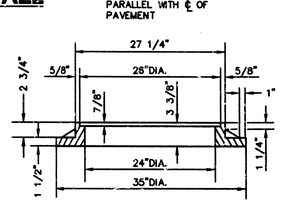

CAST IRON INLET RING

WT.=180 LBS.

SEE CITY OF WICHITA STANDARD MANHOLE FRAME AND COVER DETAIL SHEET FOR COVER DETAILS TO BE USED WITH INLET FRAME.

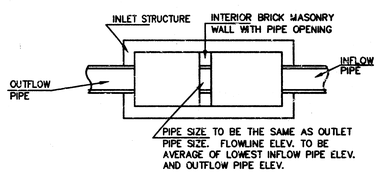

CASE I

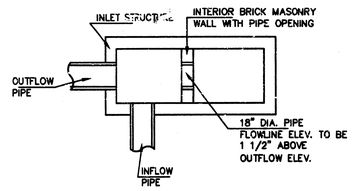

CASE II

NOTE: CENTER WALL PIPE SIZE SHALL BE AS SPECIFIED IN INLET CONSTRUCTION NOTE ON THE PLAN/PROFILE SHEETS FOR THOSE CASES NOT SHOWN HERE.

SLAB AND FLOOR REINFORCING

		W=4'-4"		W=5'-4"		W=6'-4"		W=7'-4"		W=8'-4"	
MARK	SIZE	NO.	LENGTH	NO.	LENGTH	NO.	LENGTH	NO.	LENGTH	NO.	LENGTH
a1	#4	13	6'-7 1/4"	13	8'-7 1/4"	13	10'-7 1/4"	13	12'-7 1/4"	13	14'-7 1/4"
a2	#4	2	6'-0"	2	8'-0"	2	10'-0"	2	12'-0"	2	14'-0"
a3	#4	20	4'-1"	20	5'-1"	20	6'-1"	20	7'-1"	20	8'-1"
b1	#4	1	9'-8"	1	9'-8"	1	9'-8"	1	9'-8"	1	9'-8"
*b2	#4	18	11'-1"	24	11'-1"	30	11'-1"	36	11'-1"	42	11'-1"

WALL REINFORCING

		W=4'-4"		W=5'-4"		W=6'-4"		W=7'-4"		W=8'-4"	
MARK	SIZE	NO.	LENGTH	NO.	LENGTH	NO.	LENGTH	NO.	LENGTH	NO.	LENGTH
c1	#6	4	6'-1"	4	7'-1"	4	8'-1"	4	9'-1"	4	10'-1"
w1	#4	①	11'-1"	①	11'-1"	①	11'-1"	①	11'-1"	①	11'-1"
w2	#4	①	4'-1"	①	5'-1"	①	6'-1"	①	7'-1"	①	8'-1"
w3	#4	②	③	②	③	②	③	②	③	②	③

* FIELD BEND OR CUT REINFORCING AS REQUIRED FOR CLEARANCE
① 4(H1-6")+4 (H1-6") ROUNDED DOWN TO NEAREST 0.5'
② 40+4(W-16")
③ H1+(9")

GENERAL NOTES

1. THE CONTRACTOR SHALL BE REQUIRED TO CONSTRUCT 8" BRICK MASONRY WALLS BETWEEN THE CONCRETE INLET BASE AND TOP ON THIS INLET WHEN W=6'-4" OR LESS AND H=7'-0" OR LESS. WHEN W IS GREATER THAN 6'-4" AND H IS LESS THAN 7'-0", THE OUTSIDE INLET WALLS BELOW THE BRICK STACK SHALL BE REINFORCED CONCRETE CONSTRUCTION AND THE CENTER WALL SHALL BE OF MASONRY CONSTRUCTION AS SHOWN FOR THE MASONRY WALL OPTION.
2. INLET INVERT SHALL BE SHAPED WITH 8 SACK SAND MIX CONCRETE TO CREATE FLOW CHANNELS AND TO INCREASE HYDRAULIC EFFICIENCY SUCH THAT THE INLET WILL BE SELF CLEANING BETWEEN ALL INLET AND/OR OUTLET PIPES.
3. CONCRETE TOPS TO BE INSTALLED ON THIN MORTAR CUSHION TO INSURE FULL SUPPORT ALONG BRICK WALLS. CONRETE TOPS MAY BE CAST IN PLACE OR PRECAST. CONCRETE USED FOR INLET CONSTRUCTION SHALL BE CONCRETE PAVEMENT MIX.
4. INLET TOP REINFORCING SHALL BE SPACED ON 6" MAX. CENTERS. INLET LIDS SHALL BE NOTCHED OUT AS INDICATED TO FACILITATE CONSTRUCTION OF CURB. BARS IN INLET TOP TO BE FIELD BENT OR CUT TO CLEAR MANHOLE RING.
5. THE ENDS OF ALL PIPES INSTALLED IN INLETS SHALL BE CUT OFF FLUSH WITH THE INSIDE FACE OF THE INLET WALL.

STANDARD CURB INLET PRECAST TOPS			
W	PRE-CAST TOP SIZE	SIDE OR INTERIOR WALL PIPE SIZE	CU. YD. CONC.
4'-4"	3'-8"x11'-4"x7 1/2"	21" & SMALLER	0.83±
5'-4"	4'-8"x11'-4"x7 1/2"	24" & 30"	1.09±
6'-4"	5'-8"x11'-4"x7 1/2"	36" & 42"	1.35±
7'-4"	6'-8"x11'-4"x7 1/2"	48" & 54"	1.61±
8'-4"	7'-8"x11'-4"x7 1/2"	60" & 66"	1.87±

REVISED: 12-5-88 C.O.W.

STANDARD TYPE 1A CURB INLET

INLET OPENING=6"x10'-0"

NOV. 1984

CITY OF WICHITA, KANSAS

Design C.O.W.	Checked by	Checked by	
Drawn by	Date	Date SEPT. 1997	Job No. 98167DD2

I:\CIVIL\98167\SHS\98167DD2 Thu Sep 04 15:34:05 1997

E:\CIVIL\98167\SHS\98167DD2.DWG

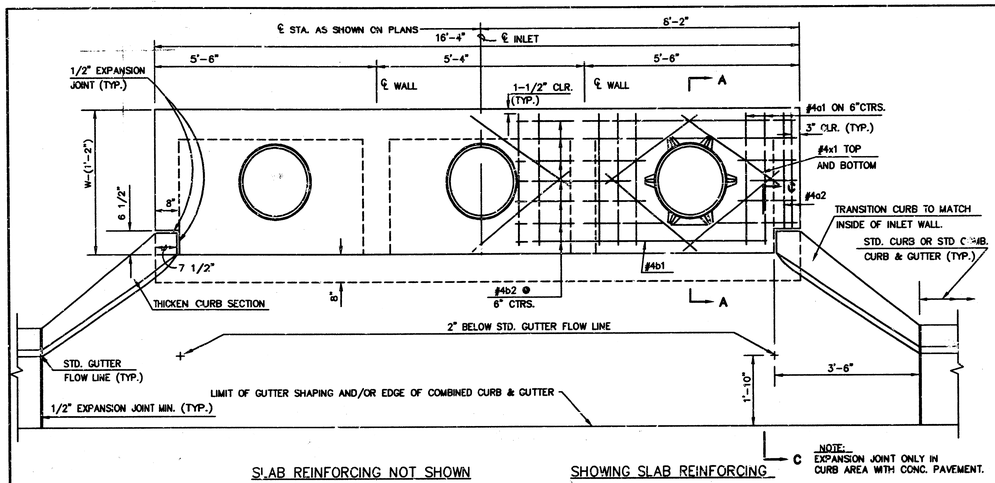

SLAB REINFORCING NOT SHOWN — SHOWING SLAB REINFORCING

PLAN

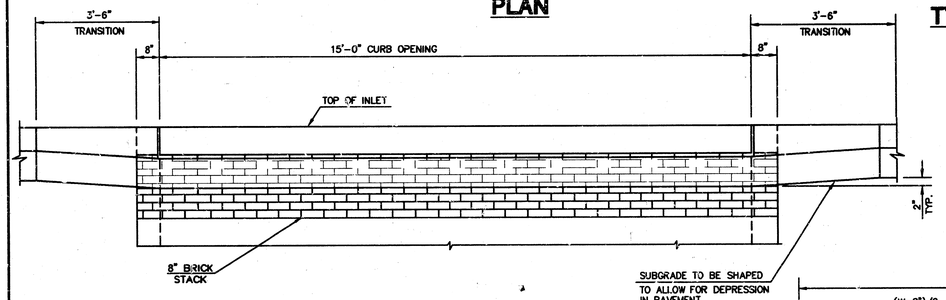

ELEVATION

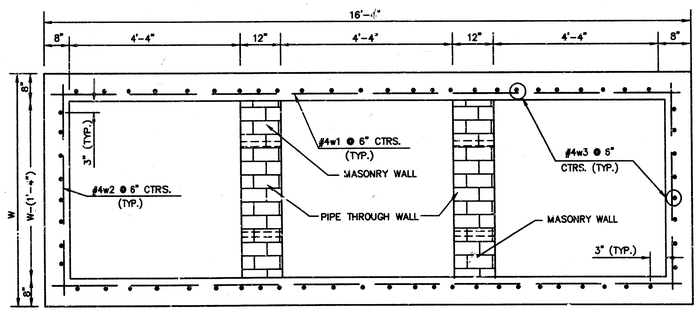

SECTION B-B

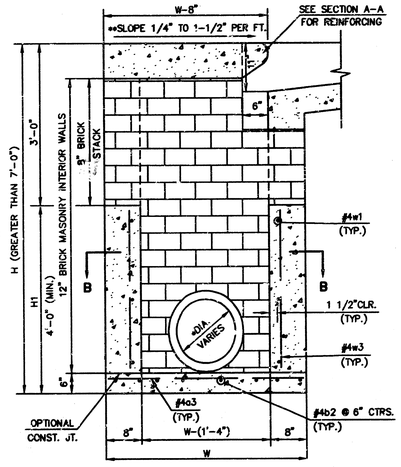

TYPICAL INLET SECTION AT INTERIOR WALL

(REINFORCED CONCRETE WALLS)

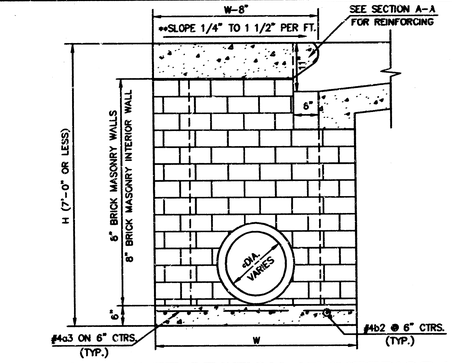

TYPICAL INLET SECTION AT INTERIOR WALL

(MASONRY WALLS)

* AN INTERIOR WALL OPENING SHALL BE PROVIDED BY MEANS OF A SECTION OF REINFORCED CONCRETE PIPE. SEE CASE I AND CASE II.

** SLOPE OF INLET TOP TO MATCH SIDEWALK OR PARKING SLOPE WITHIN THE LIMITS INDICATED.

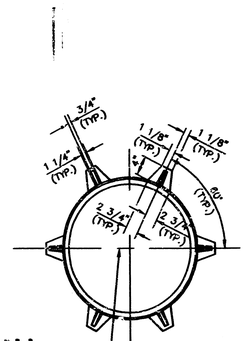

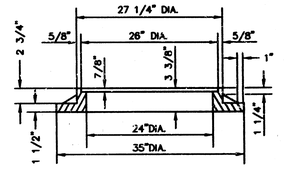

CAST IRON INLET RING

WT.=180 LBS.

SEE CITY OF WICHITA STANDARD MANHOLE FRAME AND COVER DETAIL SHEET FOR COVER DETAILS TO BE USED WITH INLET FRAME.

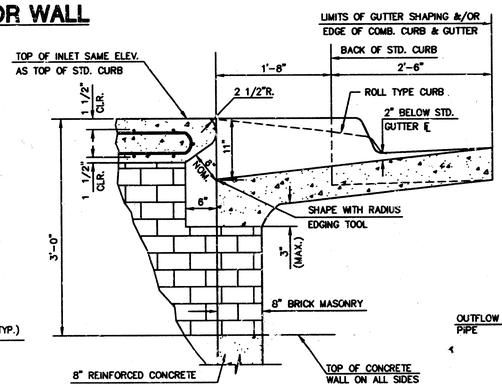

SECTION C-C

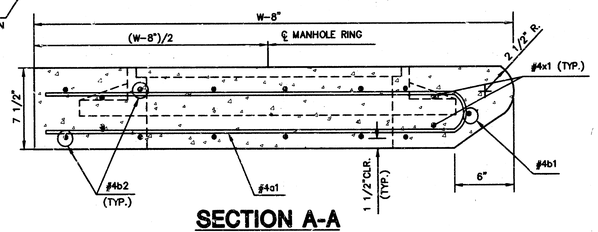

SECTION A-A

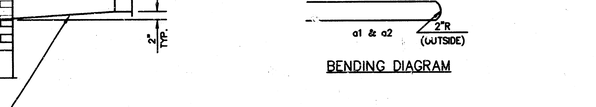

BENDING DIAGRAM

PRECAST SLAB AND FLOOR REINFORCING

		W=4'-4"		W=5'-4"		W=6'-4"		W=7'-4"		W=8'-4"	
MARK	SIZE	NO.	LENGTH	NO.	LENGTH	NO.	LENGTH	NO.	LENGTH	NO.	LENGTH
*a1	#4	20	6'-7"	20	8'-7"	20	10'-7"	20	12'-7"	20	14'-7"
a2	#4	4	6'-0"	4	8'-0"	4	10'-0"	4	12'-0"	4	14'-0"
a3	#4	33	4'-1"	33	5'-1"	33	6'-1"	33	7'-1"	33	8'-1"
b1	#4	1	14'-9"	1	14'-9"	1	14'-9"	1	14'-9"	1	14'-9"
*b2	#4	23	16'-1"	29	16'-1"	35	16'-1"	41	16'-1"	47	16'-1"
x1	#4	24	3'-10"	24	4'-2"	24	4'-6"	24	4'-10"	24	5'-2"

WALL REINFORCING

		W=4'-4"		W=5'-4"		W=6'-4"		W=7'-4"		W=8'-4"	
MARK	SIZE	NO.	LENGTH	NO.	LENGTH	NO.	LENGTH	NO.	LENGTH	NO.	LENGTH
w1	#4	①	16'-1"	①	16'-1"	①	16'-1"	①	16'-1"	①	16'-1"
w2	#4	①	4'-1"	①	5'-1"	①	6'-1"	①	7'-1"	①	8'-1"
w3	#4	72	②	76	②	80	②	84	②	88	②

* FIELD BEND OR CUT REINFORCING AS REQUIRED FOR CLEARANCE
① 4(H1-12"); (H1-12") ROUND DOWN TO NEAREST 0.5'
② H1-3"

GENERAL NOTES

1. THE CONTRACTOR SHALL BE REQUIRED TO CONSTRUCT 8" BRICK MASONRY WALLS BETWEEN THE CONCRETE INLET BASE AND TOP WHEN W=6'-4" OR LESS AND H=7'-0 OR LESS. WHEN W IS GREATER THAN 6'-4" AND H IS LESS THAN 7'-0". THE OUTSIDE INLET WALLS BELOW THE BRICK STACK SHALL BE REINFORCED CONCRETE CONSTRUCTION THE INTERIOR WALLS SHALL BE OF MASONRY CONSTRUCTION.
2. INLET INVERT SHALL BE SHAPED WITH 8 SACK SAND MIX CONCRETE TO CREATE FLOW CHANNELS AND TO INCREASE HYDRAULIC EFFICIENCY SUCH THAT THE INLET WILL BE SELF CLEANING BETWEEN ALL INLET AND/OR OUTLET PIPES.
3. CONCRETE SHALL BE C.O.W. STANDARD PAVING MIX. ALL EXPOSED EDGES SHALL BE FINISHED WITH AN EDGING TOOL. REINFORCING BARS SHALL BE FIELD BENT OR CUT TO CLEAR PIPES AND INLET RING. ALL BARS ARE #4 BARS AT 6" SPACING AND SHALL HAVE A MINIMUM CLEARANCE OF 1-1/2" UNLESS OTHERWISE NOTED.
4. CONCRETE TOPS TO BE INSTALLED ON THIN MORTAR CUSHION TO INSURE FULL SUPPORT ALONG BRICK WALLS. CONCRETE TOPS MAY BE CAST IN PLACE OR PRECAST.
5. THE ENDS OF ALL PIPES INSTALLED IN INLETS SHALL BE CUT OFF FLUSH WITH THE INSIDE FACE OF THE INLET WALL.

STANDARD CURB INLET PRECAST TOPS

W	PRE-CAST TOP SIZE	SIDE OR INTERIOR WALL PIPE SIZE	CU. YD. CONC.
4'-4"	3'-8"x16'-4"x7-1/2"	21" & SMALLER	1.20±
5'-4"	1'-8"x16'-4"x7-1/2"	24" & 30"	1.58±
6'-4"	5'-8"x16'-4"x7-1/2"	36" & 42"	1.95±
7'-4"	6'-8"x16'-4"x7-1/2"	48" & 54"	2.33±
8'-4"	7'-8"x16'-4"x7-1/2"	60" & 66"	2.70±

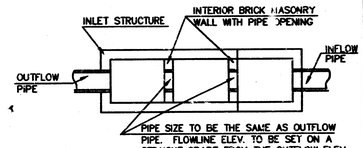

CASE I

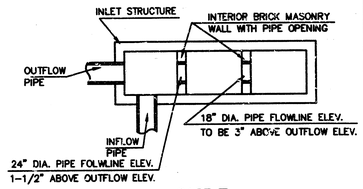

CASE II

NOTE: INTERIOR WALL PIPE SIZE SHALL BE AS SPECIFIED IN THE INLET CONSTRUCTION NOTE ON THE PLAN/PROFILE SHEETS FOR THOSE CASES NOT SHOWN HERE.

REVISED: 2-17-89

STANDARD TYPE 1A CURB INLET

INLET OPENING=6"x15'-0"

JANUARY 1989

CITY OF WICHITA, KANSAS

Design C.O.W.	Checked by	Checked by	
Drawn by	Date	Date SEPT. 1997	Job No. 96167D03

I:\CIVIL\96167\SMS\96167D03 Thu Sep 04 15:35:50 1997

NOTE: GRATES SHALL BE IMPRINTED ON THE TOP SURFACE WITH "CITY OF WICHITA" USING LETTERS AT LEAST 1" IN HEIGHT. OTHER MARKING METHODS MAY BE USED ONLY IF APPROVED BY THE ENGINEER.

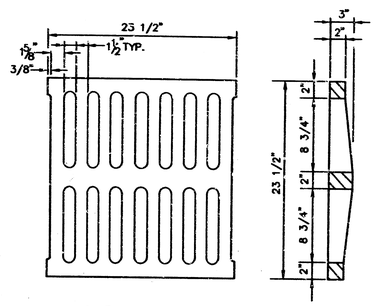

24"x24" GRATE DETAIL

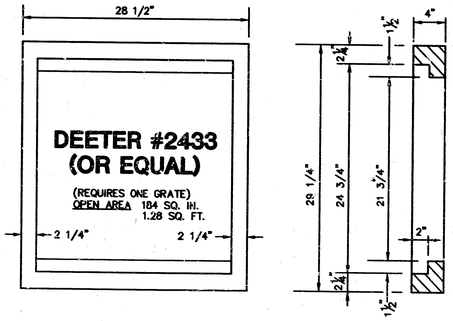

SINGLE 24"x24" FRAME DETAIL

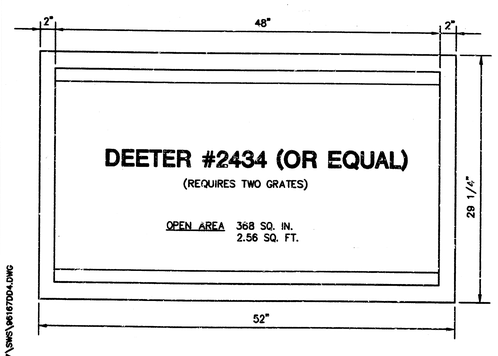

DOUBLE 24"x24" FRAME DETAIL

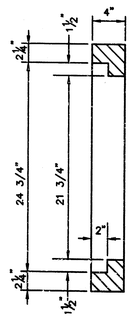

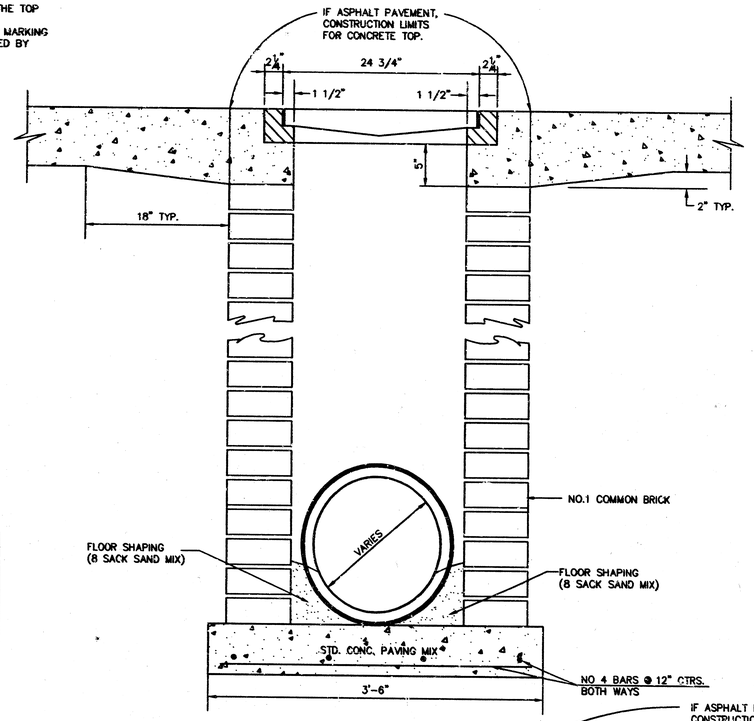

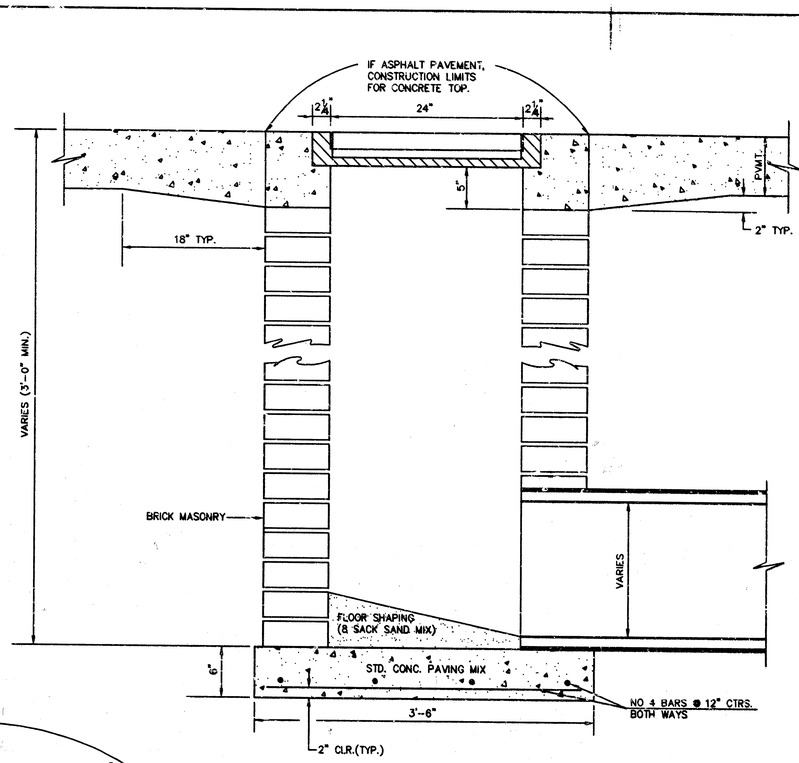

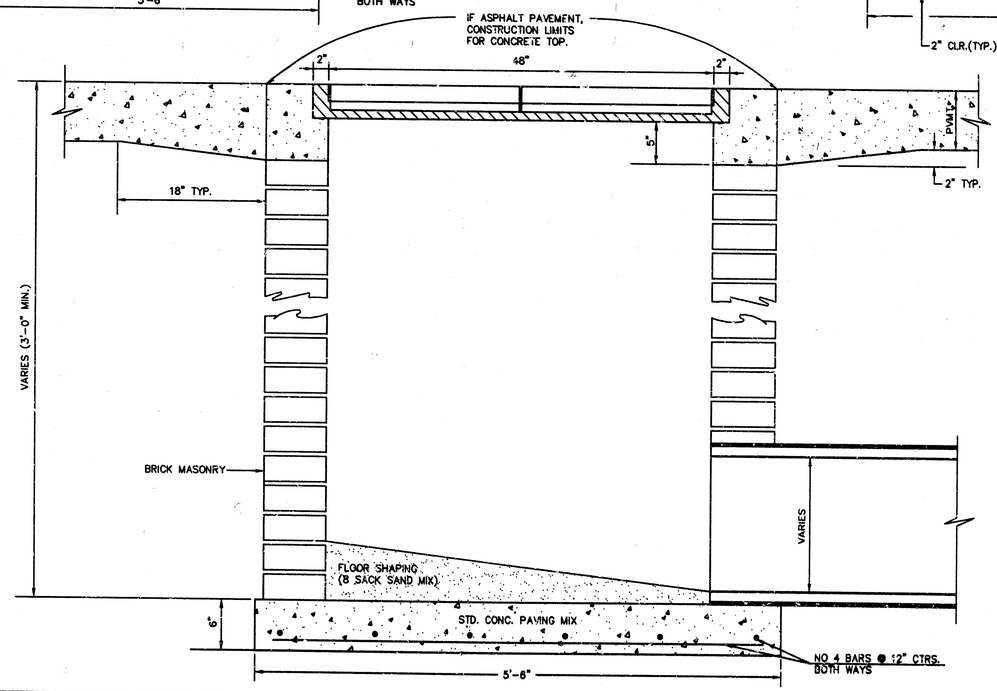

ORIFICE EQUATION		
$Q=C*A*\sqrt{2gh}$		C=0.60
h (DEPTH)	#2433 (SINGLE)	#2434 (DOUBLE)
0.1	1.95 cfs	3.89 cfs
0.2	2.75 cfs	5.50 cfs
0.3	3.37 cfs	6.74 cfs
0.4	3.89 cfs	7.78 cfs
0.5	4.35 cfs	8.70 cfs
0.6	4.77 cfs	9.53 cfs
0.7	5.15 cfs	10.30 cfs
0.8	5.50 cfs	11.01 cfs
0.9	5.84 cfs	11.67 cfs
1.0	6.15 cfs	12.30 cfs

REVISED: 5-8-90 JNJ

DROP INLET DETAILS

CITY OF WICHITA, KANSAS

Design C.O.W.	Checked by	Checked by	
Drawn by	Date	Date	Job No. 96167DD4

F:\CIVIL\96167\SWS\96167DD4.DWG

I:\CIVIL\96167\SWS\96167DD4 Thu Sep 04 15:37:00 1997

SEWER APPURTENANCES DETAILS

ADOPTED AS STANDARD DESIGN BY CITY OF WICHITA

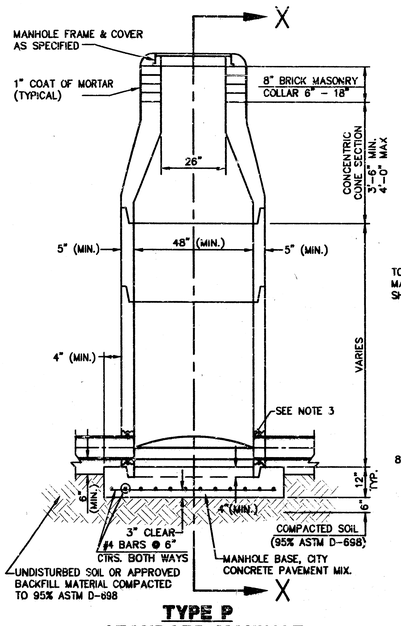

TYPE P STANDARD MANHOLE

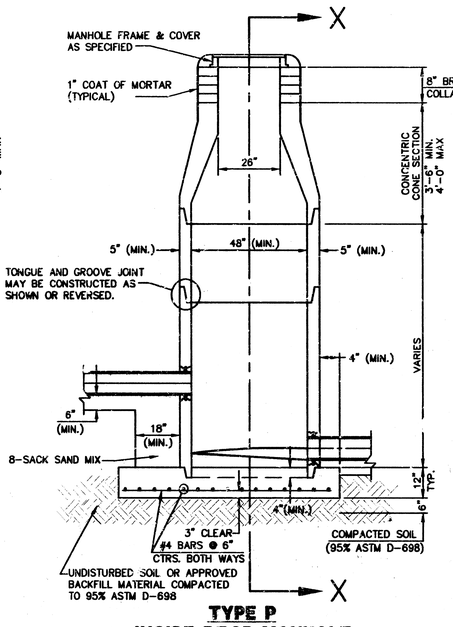

TYPE P INSIDE DROP MANHOLE

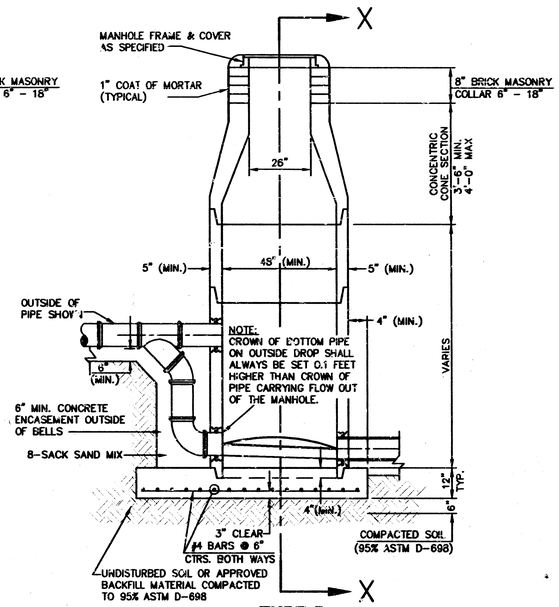

TYPE P OUTSIDE DROP MANHOLE

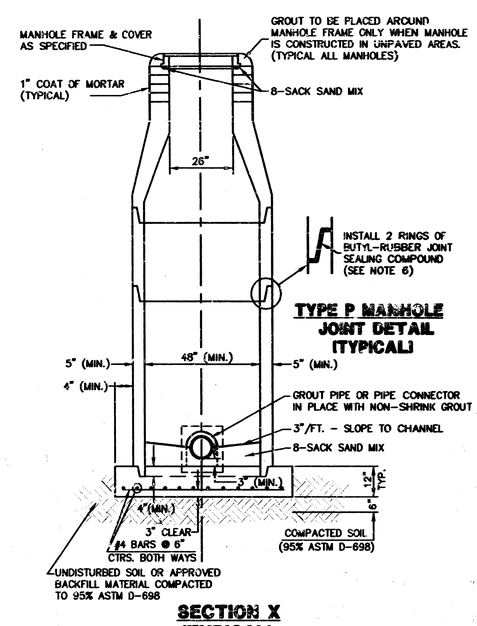

TYPE P MANHOLE JOINT DETAIL (TYPICAL)

SECTION X (TYPICAL)

GENERAL NOTES - PRECAST MANHOLE NOTES

1. ALL PRECAST CONCRETE MANHOLE SECTIONS SHALL CONFORM TO THE LATEST REVISIONS OF A.S.T.M. C478 AS MODIFIED BY THE SPECIFICATIONS.
2. NON-SHRINK GROUT SHALL BE NON-METALLIC TYPE.
3. APPROVED FLEXIBLE WATERSTOP GASKETS SHALL BE INSTALLED TO JOIN THE SEWER TO THE MANHOLE WALL WHEN A.B.S. COMPOSITE PIPE OR P.V.C. PIPE IS USED. FOR OTHER TYPES OF PIPE THE SEWER SHALL BE GROUTED IN PLACE WITH NON-SHRINK GROUT. THE SEWER PIPE SHALL BE SUPPORTED WITH CONCRETE ENCASEMENT A MINIMUM OF 3 FEET FROM THE MANHOLE WALL AND TO THE FIRST JOINT FOR V.C.P. SUCH THAT THE JOINT REMAINS FLEXIBLE.
4. ALL INSIDE SURFACES OF THE CONCRETE MANHOLE WHICH WOULD BE EXPOSED TO SEWER GAS SHALL BE COATED WITH 2 COATS TNEMEC SERIES 66 HI-BUILD EPOXOLINE, DRY THICKNESS OF 8 MILS (MIN.)
5. EXTERIOR MANHOLE WALLS SHALL BE COATED WITH 1 COAT MOBILARMA 633 BITUMINUS COATING.
6. JOINT SEALING COMPOUND SHALL BE KENT SEAL NO. 2 OR APPROVED EQUAL.
7. PRECAST MANHOLES SHALL BE SET AT LEAST 4 INCHES INTO THE MANHOLE BASE.
8. TOP OF MANHOLE FLOOR SLAB SHALL BE AT LEAST 3 INCHES BELOW THE FLOW LINE OF THE OUTLET PIPE TO INSURE SUFFICIENT MINIMUM THICKNESS OF SHAPED INVERT.
9. LIFTING HOLES SHALL BE FILLED WITH NON-SHRINK GROUT AND THE INTERIOR SURFACE COATED AS SPECIFIED.
10. MORTAR USED IN MASONRY CONSTRUCTION SHALL CONTAIN 8 SACKS OF CEMENT PER CUBIC YARD. CONCRETE USED IN MANHOLE BASES SHALL CONFORM TO THE REQUIREMENTS OF CONCRETE FOR CONCRETE PAVEMENT CONSTRUCTION AS SPECIFIED IN THE CITY STANDARD PAVING SPECIFICATIONS USING CITY CONCRETE PAVEMENT MIX WITHOUT AIR ENTRAINING ADMIXTURE. MORTAR SHALL BE PLACED AROUND THE MANHOLE RING AS SHOWN ON THE DRAWINGS WHEN MANHOLES ARE CONSTRUCTED IN UNPAVED AREAS. MANHOLES CONSTRUCTED WHERE PIPE SIZES ARE SMALLER THAN 24" SHALL HAVE AN INSIDE DIAMETER OF 4'. MANHOLES CONSTRUCTED WHERE PIPE SIZES ARE 24" OR LARGER SHALL HAVE AN INSIDE DIAMETER OF 5'. COMPLETED MANHOLE SHALL BE WITHOUT LEAKS AND WATER TIGHT.
11. REINFORCING STEEL SHALL BE INSTALLED IN THE MANHOLE BASES AND SHALL CONSIST OF NO. 4 BARS PLACED ON 6" CENTERS IN BOTH DIRECTIONS. THE MANHOLE BASE REINFORCEMENT SHALL BE PLACED AT LEAST 3" ABOVE THE BOTTOM OF THE MANHOLE BASE. ALL COSTS FOR FURNISHING AND INSTALLING REINFORCING STEEL SHALL BE INCLUDED IN THE UNIT PRICE BID FOR THE MANHOLE.
12. OPENINGS SHALL BE CUT INTO THE MANHOLE WALL WHEN OUTSIDE DROPS ARE CONSTRUCTED ON EXISTING MANHOLES. SUCH OPENINGS CUT INTO EXISTING MANHOLES SHALL BE AS SMALL AS PRACTICAL TO FACILITATE INSTALLING AND GROUTING THE NEW PIPE IN PLACE. WATERSTOP GASKETS SHALL BE USED WITH P.V.C. AND A.B.S. COMPOSITE PIPE. THE NEW PIPE SHALL BE GROUTED INTO THE OPENING USING AN APPROVED NONSHRINK GROUT FOR THE FULL MANHOLE WALL THICKNESS. THE EXTERIOR OF THE COMPLETED CONNECTION SHALL BE SEALED WITH AN APPROVED BITUMINOUS COATING SUCH THAT THE CONNECTION WILL BE WATER TIGHT. FLOOR OF MANHOLE SHALL BE MODIFIED TO FORM NEW FLOW CHANNEL FOR THE NEW CONNECTION AS INDICATED BY THE DRAWING. THIS WORK, INCLUDING MODIFICATION OF MANHOLE FLOOR, SHALL BE PAID FOR AT THE UNIT PRICE BID FOR OUTSIDE DROP STACK CONSTRUCTED ON EXISTING MANHOLE.
13. THE FLOORS OF ALL MANHOLES SHALL BE SHAPED WITH FLOW CHANNELS SUCH THAT THE MANHOLES WILL BE SELF CLEANING AND FREE OF AREAS WHERE SOLIDS COULD BE DEPOSITED AS SEWAGE FLOWS THROUGH THE MANHOLE FROM ALL INLET PIPES TO THE OUTLET PIPE. FLOW CHANNELS SHALL BE FORMED TO MATCH THE BOTTOM HALVES OF THE INFLOWING PIPES AND THE OUTFLOWING PIPE AS SHOWN BY THE DRAWINGS EXCEPT FOR INSIDE DROP MANHOLES. FLOW CHANNELS FOR INSIDE DROP MANHOLES SHALL BE CONSTRUCTED AS INDICATED BY THE DRAWING. MANHOLE FLOORS SHALL HAVE SLOPES OF 3 INCHES PER FOOT IN THE AREAS OUTSIDE OF THE FLOW CHANNELS SLOPED TOWARD THE FLOW CHANNELS. PIPES LAID THROUGH MANHOLES SHALL HAVE THE TOP HALF REMOVED TO NEAT LINES FOR THE FULL INSIDE DIAMETER OF THE MANHOLE. MANHOLE FLOORS SHALL THEN BE SHAPED AROUND THE BOTTOM HALF OF THE PIPE WHICH FORMS THE FLOW CHANNEL.
14. PIPES INSTALLED WITHIN THE EXCAVATION MADE FOR THE MANHOLE SHALL BE CRADLED WITH CONCRETE TO THE LIMITS OF THE MANHOLE EXCAVATION. WHEN CLAY PIPE IS USED, THE CRADLE SHALL EXTEND TO THE FIRST JOINT OUTSIDE THE MANHOLE. THE CRADLE SHALL BE TERMINATED AT THE CLAY PIPE JOINT IN A MANNER WHICH WILL MAINTAIN THE FLEXIBILITY OF THE JOINT. COST OF CRADLE WITHIN MANHOLE EXCAVATION OR TO CLAY PIPE JOINTS ADJACENT TO MANHOLE SHALL BE INCLUDED IN THE UNIT PRICE BID FOR THE MANHOLE.
15. MANHOLE COVER CASTINGS AND MANHOLE FRAME CASTINGS SHALL CONFORM TO THE REQUIREMENTS AS INDICATED IN THE STANDARD SPECIFICATIONS AND AS SHOWN IN THE STANDARD DETAIL DRAWING.
16. THE VERTICAL DROP IN INSIDE DROP MANHOLES SHALL NOT EXCEED 2' FOR INFLOWING PIPES. THE CROWNS OF INFLOWING PIPES SHALL NEVER BE SET LOWER THAN THE CROWN OF THE OUTFLOWING PIPE.
17. STANDARD MANHOLES AND STANDARD INSIDE DROP MANHOLES SHALL BE BID AS STANDARD MANHOLES FOR THE TYPE AND DIAMETER INDICATED. OUTSIDE DROP MANHOLES SHALL BE BID AS STANDARD OUTSIDE DROP MANHOLES FOR THE TYPE AND DIAMETER INDICATED. ALL MANHOLE DIAMETERS WILL BE 4' UNLESS INDICATED OTHERWISE.
18. A BRICK MASONRY COLLAR SHALL BE INSTALLED BETWEEN THE CAST IRON FRAME AND THE CONCENTRIC CONE. THE COLLAR WILL HAVE 8" WALLS AND A VERTICAL HEIGHT OF 6" MINIMUM AND 18" MAXIMUM. A 1" COAT OF MORTAR WILL BE PLASTERED ON THE OUTSIDE OF THE COLLAR.

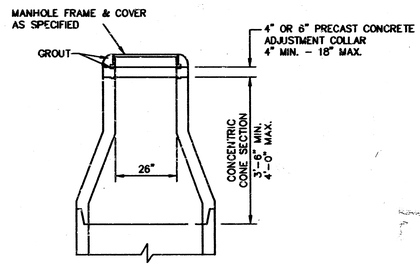

ALTERNATE CONSTRUCTION IN UNPAVED AREAS

REVISED: 6-12-96

MANHOLE DETAILS

CITY OF WICHITA, KANSAS

Design C.O.W.	Checked by	Checked by	
Drawn by	Date	Date	Job No. 96167DD5

E:\CAD\L\96167\SHT\96167DD5.DWG

I:\CIVIL\96167\SHT\96167DD5.DWG Thu Sep 04 15:37:57 1997

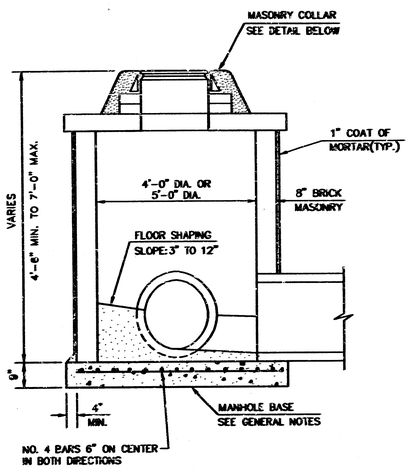

SHALLOW TYPE "A" MANHOLE

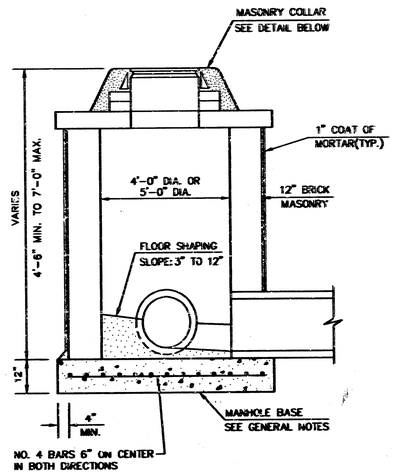

SHALLOW TYPE "B" MANHOLE

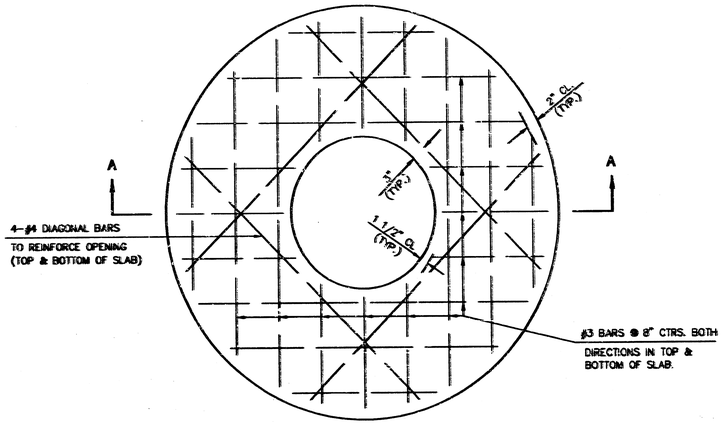

PLAN

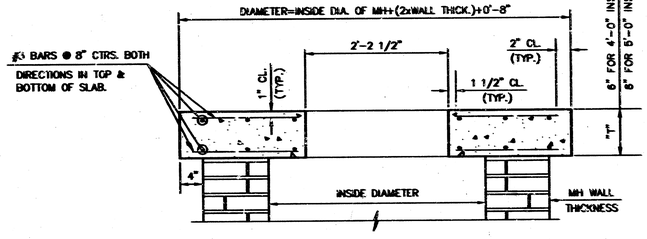

SECTION A-A

FLAT CONCRETE SLAB DETAILS

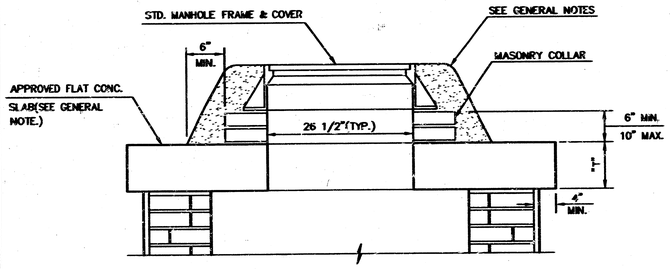

MASONRY COLLAR DETAIL

GENERAL NOTES

1. MORTAR USED IN MASONRY CONSTRUCTION SHALL CONTAIN 8 SACKS OF CEMENT PER CUBIC YARD. CONCRETE USED IN MANHOLE BASES SHALL CONFORM TO THE REQUIREMENTS OF CONCRETE FOR CONCRETE PAVEMENT CONSTRUCTION AS SPECIFIED IN THE CITY STANDARD PAVING SPECIFICATIONS USING CITY CONCRETE CEMENT MIX WITHOUT AIR ENTRAINING ADMIXTURE. MORTAR SHALL BE PLACED AROUND THE MANHOLE RING AS SHOWN ON THE DRAWINGS WHEN MANHOLES ARE CONSTRUCTED IN UNPAVED AREAS. TYPE "A" SHALLOW MANHOLES CAN BE USED ON SEWERS WHEN THE MANHOLE IS NOT LOCATED WITHIN PUBLIC STREET PAVEMENT. MANHOLES CONSTRUCTED WHERE PIPE SIZES ARE SMALLER THAN 24" SHALL HAVE AN INSIDE DIAMETER OF 4'. MANHOLES CONSTRUCTED WHERE PIPE SIZES ARE 24" OR LARGER SHALL HAVE AN INSIDE DIAMETER OF 5'. COMPLETED MANHOLE SHALL BE WITHOUT LEAKS AND WATER TIGHT.
2. REINFORCING STEEL SHALL BE INSTALLED IN THE MANHOLE BASES AND SHALL CONSIST OF NO. 4 BARS PLACED ON 8" CENTERS IN BOTH DIRECTIONS. THE MANHOLE BASE REINFORCEMENT SHALL BE PLACED 6" ABOVE THE BOTTOM OF THE MANHOLE BASE. ALL COSTS FOR FURNISHING AND INSTALLING REINFORCING STEEL SHALL BE INCLUDED IN THE UNIT PRICE BID FOR THE MANHOLE.
3. THE FLOORS OF ALL MANHOLES SHALL BE SHAPED WITH FLOW CHANNELS SUCH THAT THE MANHOLES WILL BE SELF CLEANING AND FREE OF AREAS WHERE SOLIDS COULD BE DEPOSITED AS SEWAGE FLOWS THROUGH THE MANHOLE FROM ALL INLET PIPES TO THE OUTLET PIPE. FLOW CHANNELS SHALL BE FORMED TO MATCH THE BOTTOM HALVES OF THE INFLOWING PIPES AND THE OUTFLOWING PIPE AS SHOWN BY THE DRAWINGS. MANHOLE FLOORS SHALL HAVE SLOPES OF 3 INCHES PER FOOT IN THE AREAS OUTSIDE OF THE FLOW CHANNELS SLOPED TOWARD THE FLOW CHANNELS. PIPES LAID THROUGH MANHOLES SHALL HAVE THE TOP HALF REMOVED TO NEAT LINES FOR THE FULL INSIDE DIAMETER OF THE MANHOLE. MANHOLE FLOORS SHALL THEN BE SHAPED AROUND THE BOTTOM HALF OF THE PIPE WHICH FORMS THE FLOW CHANNEL.
4. PIPES INSTALLED WITHIN THE EXCAVATION MADE FOR THE MANHOLE SHALL BE CRADLED WITH CONCRETE TO THE LIMITS OF THE MANHOLE EXCAVATION. WHEN CLAY PIPE IS USED, THE CRADLE SHALL EXTEND TO THE FIRST JOINT OUTSIDE THE MANHOLE. THE CRADLE SHALL BE TERMINATED AT THE CLAY PIPE JOINT IN A MANNER WHICH WILL MAINTAIN THE FLEXIBILITY OF THE JOINT. COST OF CRADLE WITHIN MANHOLE EXCAVATION OR TO CLAY PIPE JOINTS ADJACENT TO MANHOLE SHALL BE INCLUDED IN THE UNIT PRICE BID FOR THE MANHOLE.
5. MANHOLE COVER CASTINGS AND MANHOLE FRAME CASTINGS SHALL CONFORM TO THE REQUIREMENTS AS INDICATED IN THE STANDARD SPECIFICATIONS AND AS SHOWN IN THE STANDARD DETAIL DRAWINGS.
6. THE CROWNS OF INFLOWING PIPES SHALL NEVER BE SET LOWER THAN THE CROWN OF THE OUTFLOWING PIPE.
7. STANDARD SHALLOW MANHOLES TYPE "A" AND "B" SHALL BE PAID FOR AT THE UNIT PRICE BID PER EACH FOR THE TYPE AND DIAMETER INDICATED. STANDARD SPECIAL SHALLOW MANHOLES TYPE "A" AND "B" SHALL BE PAID FOR AT THE UNIT PRICE BID PER EACH FOR THE TYPE INDICATED. ALL STANDARD SHALLOW MANHOLE DIAMETERS WILL BE 4' UNLESS INDICATED OTHERWISE.

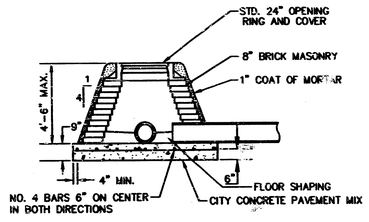

SPECIAL SHALLOW TYPE "A" MANHOLE

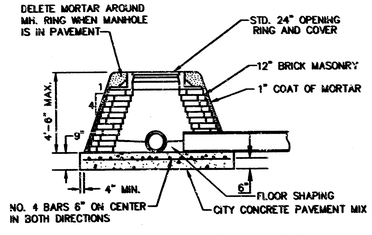

SPECIAL SHALLOW TYPE "B" MANHOLE

STANDARD SHALLOW MANHOLES TYPE "A" AND TYPE "B"

CITY OF WICHITA, KANSAS

Design C.O.W.	Checked by	Checked by	
Drawn by	Date	Date	Job No. 96167006

I:\CIVIL\96167\SHS\96167006.DWG

I:\CIVIL\96167\SHS\96167006 Thu Sep 04 15:36:57 1997

FINAL PLAT

OAK RIDGE SECOND ADDITION

AN ADDITION TO SEDGWICK COUNTY, KANSAS

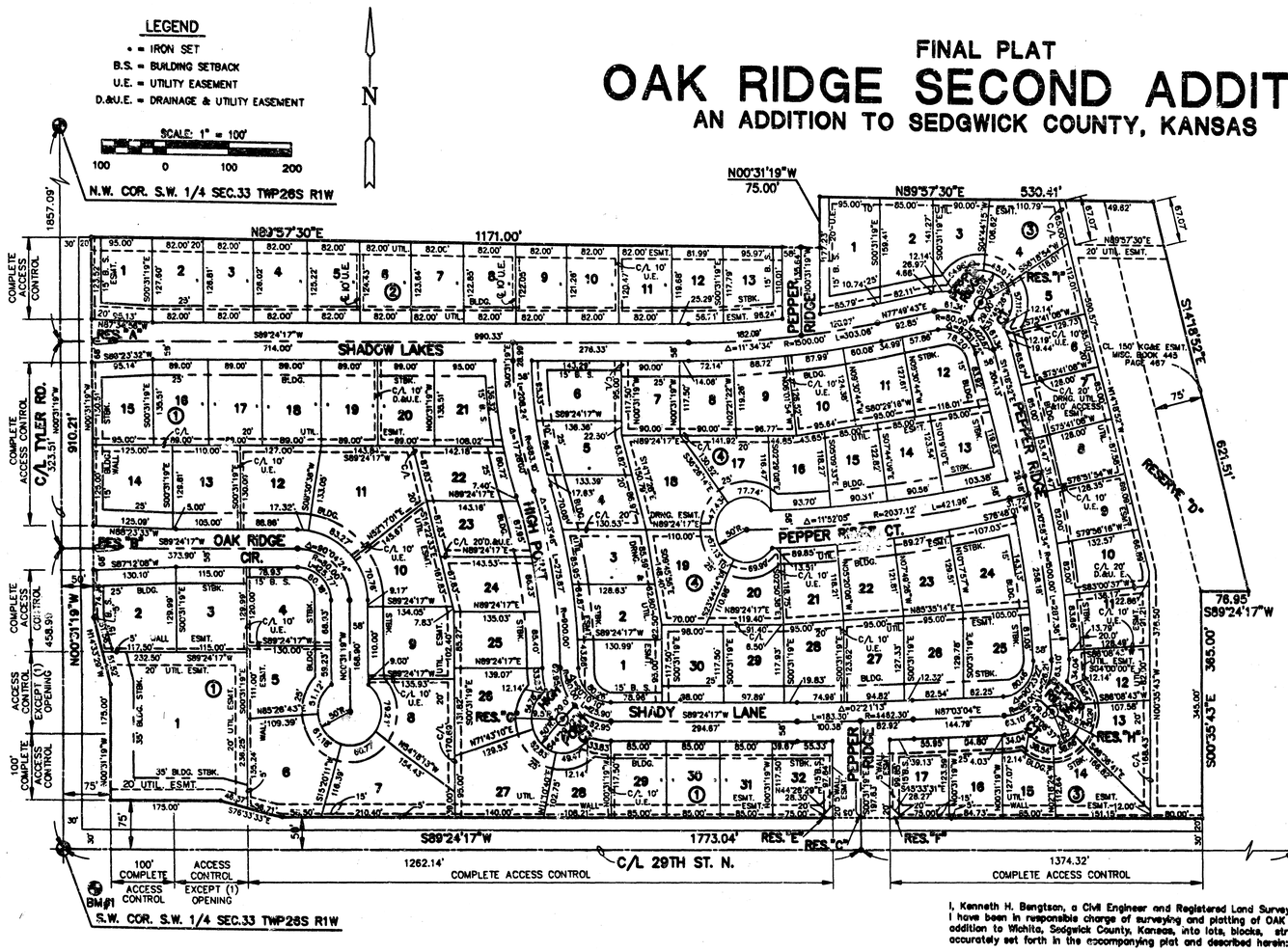

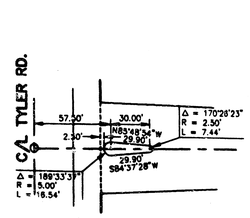

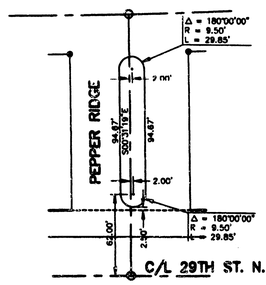

Lot	Block	Min. Pad Elev. (City Datum.)	Min. Pad Elev. (USGS Datum)
4	3	158.0	1345.4
5	3	158.0	1345.4
6	3	158.0	1345.4
7	3	158.0	1345.4
8	3	158.0	1345.4
9	3	158.0	1345.4
10	3	158.0	1345.4
11	3	158.0	1345.4
12	3	158.0	1345.4
13	3	158.0	1345.4
14	3	158.0	1345.4

BENCHMARKS

BM#1 SE COR. INTERSECTION. 32.3' SOUTH & 30' EAST OF CTR. LINE BOTH. 88.5' EAST OF PP, 9.2' SE OF PP 43.2' SE OF IRON AT SECTION CORNER. ELEV. = 178.04

I, Kenneth H. Bengtson, a Civil Engineer and Registered Land Surveyor in Kansas, do hereby certify that I have been in responsible charge of surveying and platting of OAK RIDGE SECOND ADDITION, an addition to Wichita, Sedgwick County, Kansas, into lots, blocks, streets, and reserves the same being accurately set forth in the accompanying plat and described herein:

A tract of land lying in the Southwest Quarter, Section 33, Township 26 South, Range 1 West of the 6TH P.M., Sedgwick County, Kansas, more particularly described as follows:

Beginning at a point lying 30 feet East of the West line and 30 feet North of the South line of said Southwest Quarter; thence N 00° 31' 19" W, 910.21 feet parallel with said West line to a point on the North line of General Warranty Deed found on Film 1645, Page 1709; thence N 89° 57' 30" E, 1171.00 feet along said North line of General Warranty Deed; thence N 00° 31' 19" W, 75.00 feet; thence N 89° 57' 30" E, 530.41 feet to a point on the centerline of a 150 foot K. G. & E. Easement; thence S 14° 18' 52" E, 621.51 feet along said centerline to a point on the North line of NORTHWEST SUBSTATION ADDITION, an addition to Wichita, Sedgwick County, Kansas; thence S 89° 24' 17" W, 76.95 feet along the North line to the Northwest corner of said addition; thence S 00° 35' 43" E, 365.00 feet along the West line of said addition to a point lying 30 feet North of said South line of said Southwest Quarter; thence S 89° 24' 17" W, 1773.04 feet parallel with said South line to the point of beginning.

I hereby certify that the details of this plat are correct to the best of my knowledge and belief this 2nd day of June, 1997.

Kenneth H. Bengtson, P.E., R.L.S. #922
Mid-Kansas Engineering Consultants, Inc.
411 North Webb Road
Wichita, KS 67206

Know all men by these presents that we the undersigned property owners of the land as above set forth in the Civil Engineer's and Registered Land Surveyor's Certificate, have caused the same to be surveyed and platted into lots, blocks, streets and reserves the same to be known as "OAK RIDGE SECOND ADDITION", an addition to Sedgwick County, Kansas. The streets are hereby dedicated to and for the use of the public. Easements for the construction and maintenance of public utilities and drainage, are hereby granted to the public.

Reserves A, B, C, E, and F are platted for open space, landscaping, lighting, irrigation, median, and entry monuments. Reserve D is platted for construction and maintenance of public drainage and lakes. Reserve D is also platted for open space, landscaping, irrigation, and recreation. Reserves G, H, and I are platted for open space, landscaping, lighting, irrigation, and monuments. The reserves shall be owned and maintained by the homeowners association.

All abutters right of access to or from 28th Street North over and across the South line of OAK RIDGE SECOND ADDITION, are hereby granted to the governing body, provided however, Lot 1, Block 1 shall have access to 29th Street North at one location as determined by the City Engineer. All abutters right of access to or from Tyler Road over and across the West line of OAK RIDGE SECOND ADDITION are hereby granted to the governing body, provided however, Lot 1, Block 1 shall have access to Tyler Road at one location as determined by the City Engineer.

The 10' Access Easement located in Lots 6 and 7, Block 3 is hereby granted to and for the use of the public, and shall not be obstructed.

The wall easement is platted for the construction and maintenance of a private wall, utilities may cross the wall easement.

Minimum pad elevations (Lowest opening) are as indicated on the accompanying plat.

FREEDOM DEVELOPMENT, INC.

J.V. VanAllen, President

We, Woodard Children College Trust, aka Woodard Grandchildren College Trust, an irrevocable Trust under Trust indenture, holders of a mortgage on the above described property, do hereby consent to the plat of "OAK RIDGE SECOND ADDITION"

Woodard Children College Trust, aka Woodard Grandchildren College Trust, an irrevocable Trust under Trust indenture.

Charles Woodard

Charles Woodard

STATE OF KANSAS)
SS.
SEDGWICK COUNTY)

BE IT REMEMBERED, that on this _____ day of _____, 1997, before the undersigned, a Notary Public in and for the County and State aforesaid, came J.V. VanAllen, President, Freedom Development, Inc. and Charles Woodard, trustee for Woodard Children College Trust, aka Woodard Grandchildren College Trust, an irrevocable Trust under Trust indenture, to me personally known to be the same person who executed the foregoing instrument of writing and duly acknowledged the execution of the same.

IN WITNESS WHEREOF, I have hereunto set my hand and affixed my official seal, the day and year last above written.

Notary Public

My appointment expires: _____

This plat of "OAK RIDGE SECOND ADDITION", has been submitted to and approved by the Wichita-Sedgwick County Metropolitan Area Planning Commission, Wichita, Kansas.

Dated this _____ day of _____, 1997.

WICHITA-SEDGWICK COUNTY METROPOLITAN PLANNING COMMISSION

_____, Chairman
John C. Frye

_____, Secretary
Marvin S. Krout

This plat approved and all dedications shown thereon, if any, accepted by the City Council of the City of Wichita, Kansas, this _____ day of _____, 1997.

_____, Mayor
Bob Knight

_____, City Clerk
Pat Burnett

Entered on transfer record this _____ day of _____, 1997.

_____, County Clerk
James Alford

STATE OF KANSAS)
SS:
SEDGWICK COUNTY)

This is to certify that this instrument was filed for record in the Register of Deeds office this _____ day of _____, 1997.

_____, Register of Deeds
Larry Consolver

_____, Deputy
Michael D. Hurtt

12 03 05 03