STORMWATER SEWER IMPROVEMENTS TO SERVE

BARRINGTON CORNER 2ND ADDITION

SWS No. 495

Project Number

468 [redacted] 82784

Index Code

751107

CITY OF WICHITA, KANSAS

Michael E. Lindebak, P. E., City Engineer

GENERAL NOTES

1. Contractor will be required to provide notice to utility companies a minimum of twenty-four (24) hours prior to any excavation, as follows:

   Kansas One-Call 687-2470

   The Contractor must notify the following in case of an emergency.

Cablevision	262-4270
or	263-2061
K.P.L. Gas Service Company	383-8650
Kansas Gas & Electric Company	383-8600
Arkla Gas Company	942-8350
Southwestern Bell Telephone Company	1-571-2611
City of Wichita Water Department	268-4908
City of Wichita Sewer Department	268-4071

2. Exist. utilities and their locations, as shown on the plans, represent the best information obtainable for design. Location information has been obtained from the various utility companies and is either from company record drawings or company-provided field locations. The Contractor will be required to work around existing utilities which do not conflict with proposed construction.

3. The Contractor to verify utility locations prior to construction of this project.

4. Utility service and installation shall be coordinated with the respective utility owners. Contacts are:

KG&E Gas	Steve Orth	261-6867
K.G. & E.	Miles Capps	261-6434
Wichita Water	Chuck Steven	268-4555
	Joe Botinelly	268-4908
Southwestern Bell	Jim Tobin	268-2759

5. All areas disturbed by construction operations shall be seeded with rye grass at a rate of 300 lbs/acre immediately following construction in that area. Ground shall be prepared per City of Wichita specifications prior to seeding.

6. Traffic affected by the construction of this project shall be handled in accordance with the latest edition of the Manual on Uniform Traffic Control Devices.

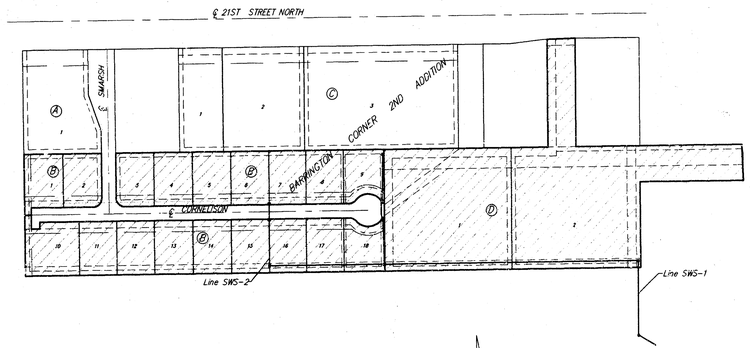

Legend:

Benefit District Included

BENCHMARK:

RR Spike in power pole
Northeast corner of 21st & Ridge
Elev. = 1413.30 City Datum

INDEX

1. Cover
2-4. Project Details
5-6. Line SWS 1
7. Line SWS 2
8. Easement Grading

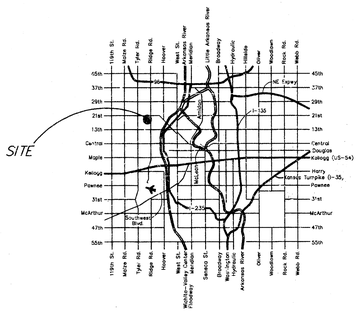

LOCATION MAP

BOOKED:
10-30-98
MCG
D-407



AUSTIN MILLER P.E.
ENGINEERING SERVICES
254 S. Laura, Suite 210 Wichita, KS 67211
316/262-1281 fax: 316/262-6773

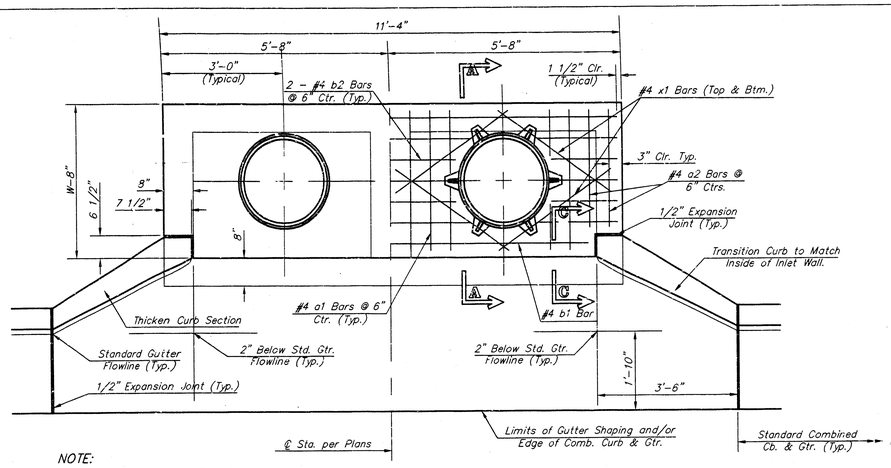

NOTE:
Expansion Joint Only in Curb Area with Concrete Pavement.

PLAN

*Left Side Shown Without Slab Reinforcing, Right Side Shown With Slab Reinforcing

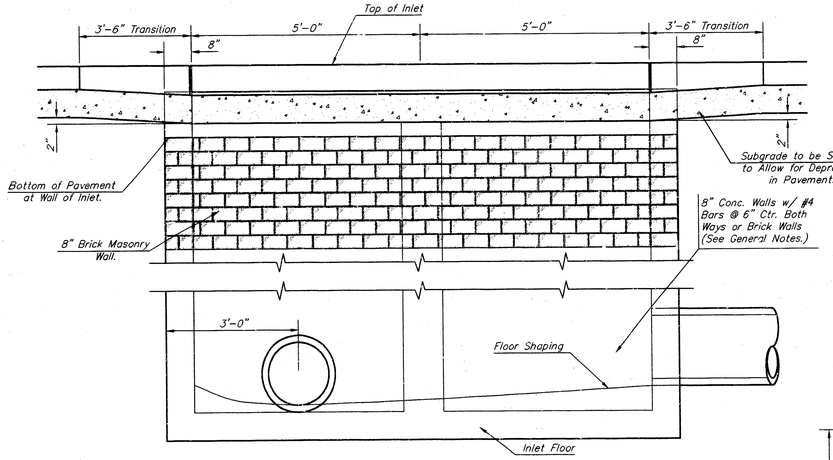

ELEVATION

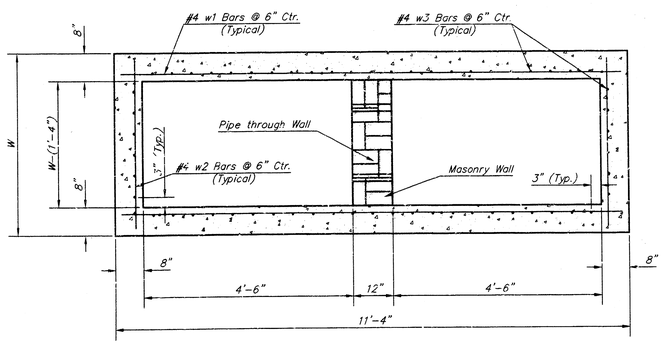

SECTION B-B

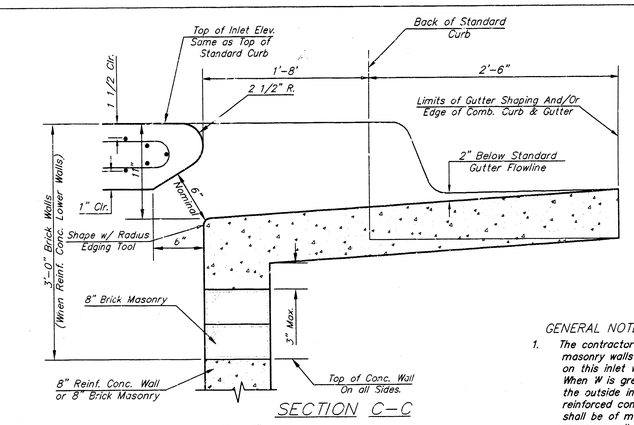

SECTION C-C

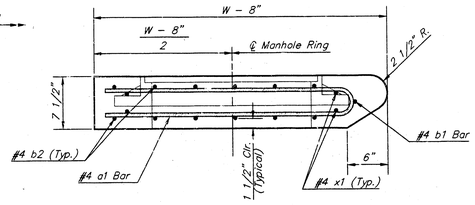

SECTION A-A

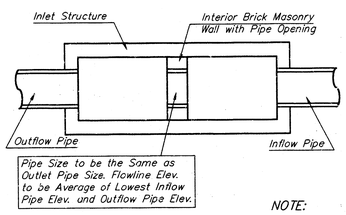

Pipe Size to be the Same as Outlet Pipe Size. Flowline Elev. to be Average of Lowest Inflow Pipe Elev. and Outflow Pipe Elev.

CASE I

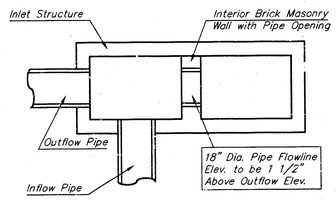

CASE II

NOTE:
Center Wall Pipe Size shall be as Specified in Inlet Construction Notes on the Plan/Profile Sheets for those Cases not Shown Here.

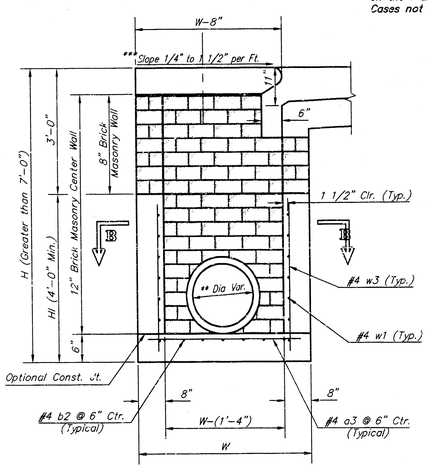

TYPICAL INLET SECTION AT CENTER WALL
(Reinforced Concrete Walls)

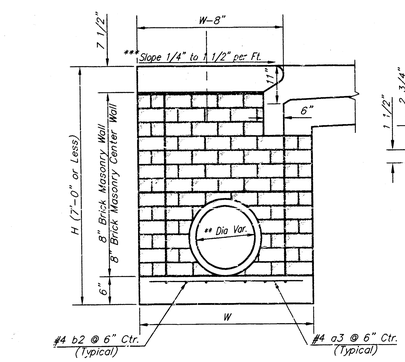

TYPICAL INLET SECTION AT CENTER WALL
(Masonry Walls)

NOTES:
** A center wall opening shall be provided by means of a section of reinforced concrete pipe. See Case I and Case II above.
*** Slope of inlet tops to match sidewalk of parking slopes within limits indictated

PRECAST SLAB AND FLOOR REINFORCING

		W = 4'-4"		W = 5'-4"		W = 6'-4"		W = 7'-4"		W = 8'-4"	
MARK	SIZE	NO.	LENGTH	NO.	LENGTH	NO.	LENGTH	NO.	LENGTH	NO.	LENGTH
* a1	#4	13	6'-7"	13	8'-7"	13	10'-7"	13	12'-7"	13	14'-7"
a2	#4	4	6'-0"	4	8'-0"	4	10'-0"	4	12'-0"	4	14'-0"
a3	#4	23	4'-1"	23	5'-1"	23	6'-1"	23	7'-1	23	8'-1"
b1	#4	1	9'-9"	1	9'-9"	1	9'-9"	1	9'-9"	1	9'-9"
* b2	#4	23	11'-1"	29	11'-1"	35	11'-1"	41	11'-1"	47	11'-1"
x1	#4	16	3'-10"	16	4'-2"	16	4'-6"	16	4'-10"	16	5'-2"

WALL REINFORCING

		W = 4'-4"		W = 5'-4"		W = 6'-4"		W = 7'-4"		W = 8'-4"	
MARK	SIZE	NO.	LENGTH	NO.	LENGTH	NO.	LENGTH	NO.	LENGTH	NO.	LENGTH
w1	#4	①	11'-1"	①	11'-1"	①	11'-1"	①	11'-1"	①	11'-1"
w2	#4	①	4'-1"	①	5'-1"	①	6'-1"	①	7'-1"	①	8'-1"
w3	#4	52	②	56	②	60	②	64	②	68	②

* Field Bend or Cut Reinforcing as Required for Clearance.
① 4 (Hl - 12") (Hl - 7') Rounded down to nearest 0.5'
② Hl - 3"

GENERAL NOTES:

1. The contractor shall be required to construct 8" brick masonry walls between the concrete inlet base and top on this inlet when W=6'-4" or less and H=7'-0" or less. When W is greater than 6'-4" and H is less than 7'-0" the outside inlet walls below the brick stack shall be reinforced concrete construction and the center wall shall be of masonry construction as shown for the masonry wall option.
2. Inlet invert shall be shaped with 8 sack sand mix concrete to create flow channels and to increase hydraulic efficiency such that the inlet will be self cleaning between all inlet and/or outlet pipes.
3. Concrete tops to be installed on thin mortar cushion to insure full support along brick walls. Concrete tops may be cast in place or precast. Concrete used for inlet construction shall be concrete pavement mix.
4. Inlet top reinforcing shall be spaced on 6" max. centers. Inlet lids shall be notched out as indicated to facilitate construction of curb. Bars in inlet top to be field bent or cut to clear manhole ring.
5. The ends of all pipes installed in inlets shall be cut off flush with the inside face of the inlet wall.

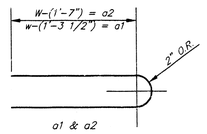

BENDING DIAGRAM

STANDARD CURB INLET PRECAST TOPS

W	PRE-CAST TOP SIZE	PIPE SIZE	CU. YD. CONC.
4'-4"	5'-8" 11'-4" 7 1/2"	21" & SMALLER	0.83±
5'-4"	6'-8" 11'-4" 7 1/2"	24" & 30"	1.09±
6'-4"	5'-8" 11'-4" 7 1/2"	36" & 42"	1.35±
7'-4"	6'-8" 11'-4" 7 1/2"	48" & 54"	1.61±
8'-4"	7'-8" 11'-4" 7 1/2"	60" & 66"	1.87±

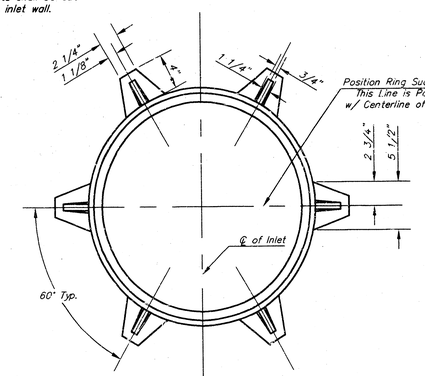

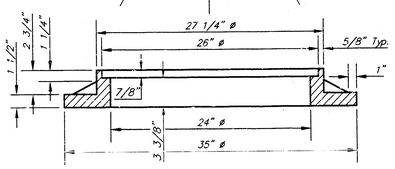

MANHOLE RING AND COVER
Weight = 180 lbs.

*See City of Wichita Standard Manhole Ring and Cover Detail Sheet for Cover Details to Be Used With Inlet Frame.

THE CITY OF WICHITA

CITY ENGINEER'S OFFICE
CITY HALL - SEVENTH FLOOR
455 NORTH MAIN STREET
WICHITA, KANSAS 67202
(316) 268-4601
(316) 268-4114 FAX

STANDARD TYPE 1-A CURB INLET OPENING = 6" x 10'-0"

M. E. LINDEBAK P.E. - CITY ENGINEER

PROJECT NUMBER	INDEX CODE
468-82784	751107
DATE: MAR 96	SHEET 2 OF 8

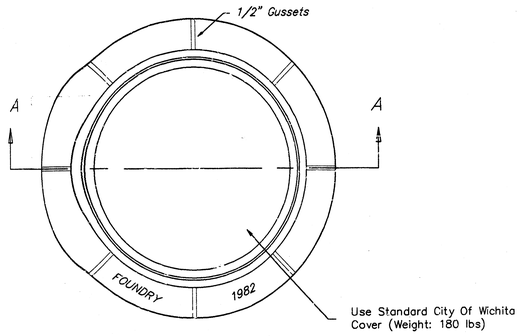

TOP VIEW

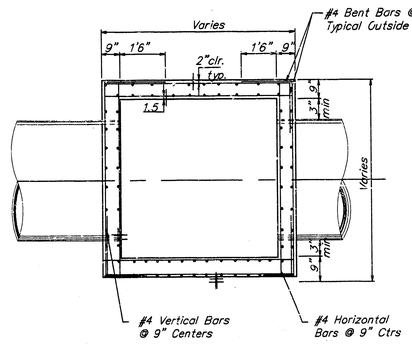

NOTE:
Bend Bars Not More Than 8"
to Clear Pipes, or Cut Bars
2" Clear of Pipe, as Necessary.

SECTION B–B

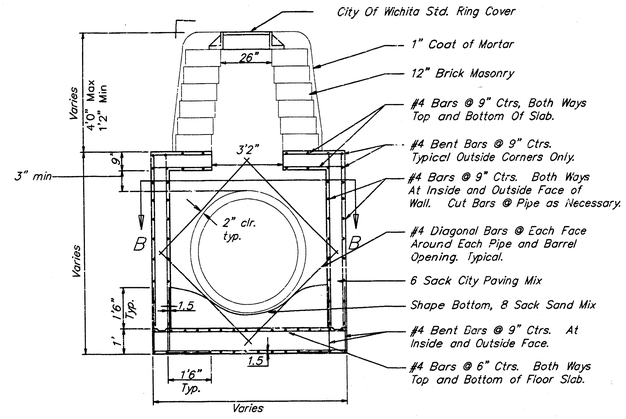

REINFORCED CONCRETE MANHOLE
STACK 2.33' TO 4'0"

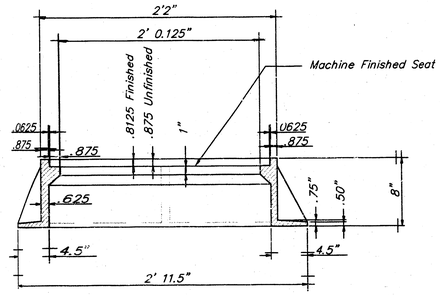

SECTION A–A

MANHOLE FRAME
Weight: 240 Lbs.

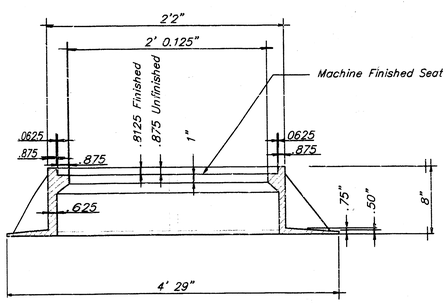

WIDE FLANGE RING
Weight: 705 Lbs.

GENERAL NOTES:

1. MORTAR USED IN MASONRY CONSTRUCTION SHALL CONTAIN 8 SACKS OF CEMENT PER CUBIC YARD. CONCRETE USED IN MANHOLE WALLS AND BASES SHALL CONFORM TO THE REQUIREMENTS FOR CONCRETE PAVEMENT CONSTRUCTION AS SPECIFIED IN THE CITY STANDARD PAVING SPECIFICATIONS, USING CITY CONCRETE PAVEMENT MIX WITHOUT AIR ENTRAINING ADMIXTURE. MORTAR SHALL BE PLACED AROUND THE MANHOLE RING AS SHOWN ON THE DRAWINGS WHEN MANHOLES ARE CONSTRUCTED IN UNPAVED AREAS. COMPLETED MANHOLE SHALL BE WITHOUT LEAKS AND WATER TIGHT.

2. THE FLOORS OF ALL MANHOLES SHALL BE SHAPED WITH FLOW CHANNELS SUCH THAT THE MANHOLES WILL BE SELF CLEANING. USING 8–SACK SAND MIX CONCRETE. FLOW CHANNELS SHALL BE FORMED TO MATCH THE BOTTOM HALVES OF THE INFLOWING PIPES AND THE OUTFLOWING PIPE. MANHOLE FLOORS SHALL HAVE SLOPES OF 3 INCHES PER FOOT IN THE AREAS OUTSIDE OF THE FLOW CHANNELS SLOPED TOWARD THE FLOW CHANNELS.

3. MANHOLE COVER CASTINGS AND MANHOLE FRAME CASTINGS SHALL CONFORM TO THE RE–QUIREMENTS AS INDICATED IN THE STANDARD SPECIFICATIONS AND AS SHOWN IN THE STANDARD DETAIL DRAWING.

4. THE ENDS OF ALL PIPES IN MANHOLES SHALL BE CUT OFF FLUSH WITH THE INSIDE FACE OF MANHOLE WALL.

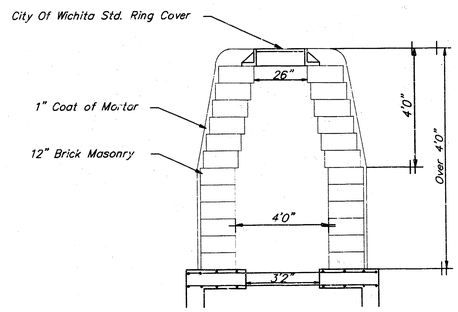

MANHOLE STACK OVER 4'0"

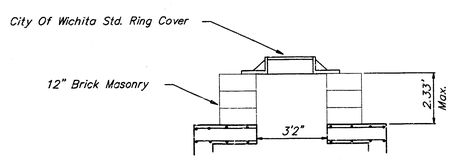

MANHOLE STACK LESS THAN 2.33'

THE CITY OF WICHITA

CITY ENGINEER'S OFFICE
CITY HALL – SEVENTH FLOOR
455 NORTH MAIN STREET
WICHITA, KANSAS 67202
(316) 268–4501
(316) 268–4114 FAX

REINFORCED CONCRETE MANHOLE

M. E. LINDEBAK P.E. – CITY ENGINEER

PROJECT NUMBER	INDEX CODE
468–82784	751107
DATE: MAR 96	SHEET 3 OF 8

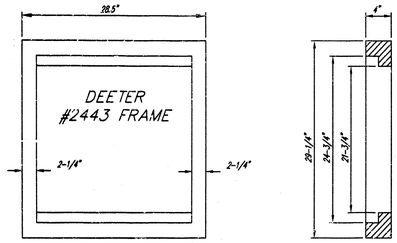

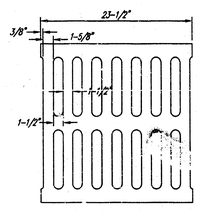

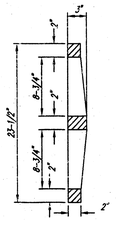

DEETER #2433 GRATE

24" x 24" Frame and Grate Detail

NOTE: Grates shall be imprinted on the top surface with "CITY OF WICHITA" using letters at least 1" in height. Other marking methods may be approved by the engineer.

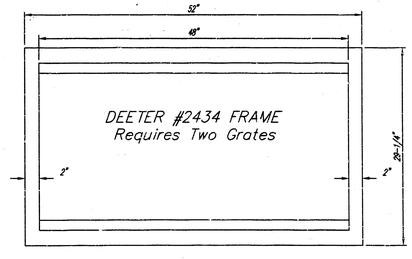

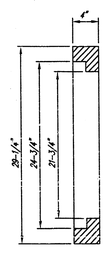

Double 24" x 24" Frame Detail

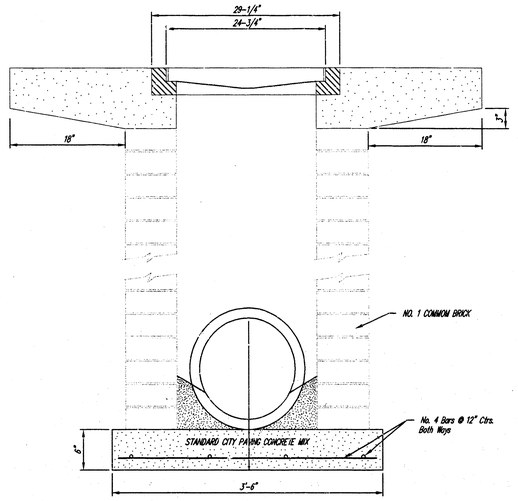

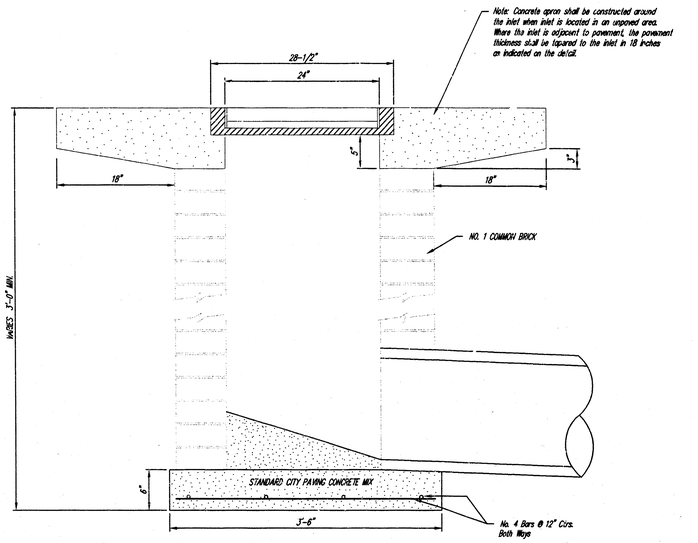

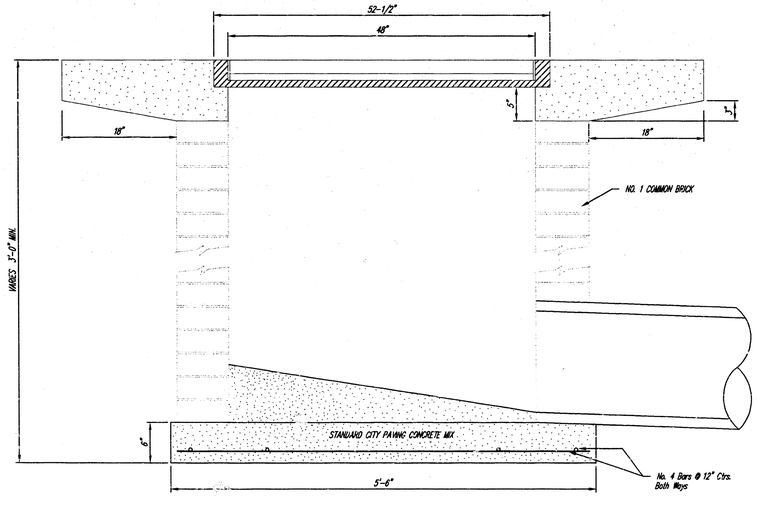

THE CITY OF WICHITA

CITY ENGINEER'S OFFICE
CITY HALL - SEVENTH FLOOR
455 NORTH MAIN STREET
WICHITA, KANSAS 67202
(316) 268-4501
(316) 268-4114 FAX

DROP INLET
2' X 2'/2' X 4'

M. E. LINDEBAK P.E. - CITY ENGINEER

PROJECT NUMBER	INDEX CODE
468-82784	751107
DATE: MAR 96	SHEET 4 OF 8

Coordinates Line SWS-1			
SWS Sta.	Description	Northing	Easting
0+00	END OF PIPE	9842.56	6477.38
0+60.2	MANHOLE	9872.33	6425.06
2+19.70	RC MANHOLE	10031.81	6425.06
5+06.70	RC MANHOLE	10028.43	6137.85
8+06.7	RC MANHOLE	10024.81	5837.49
10+71.50	RC MANHOLE	10021.71	5568.90
11+69.60	1A CURB INLET	10125.50	5568.46
12+01.60	1A CURB INLET	10157.50	5568.31
SW COR. BLK B, LOT 10	PROP. COR.	10000	5000

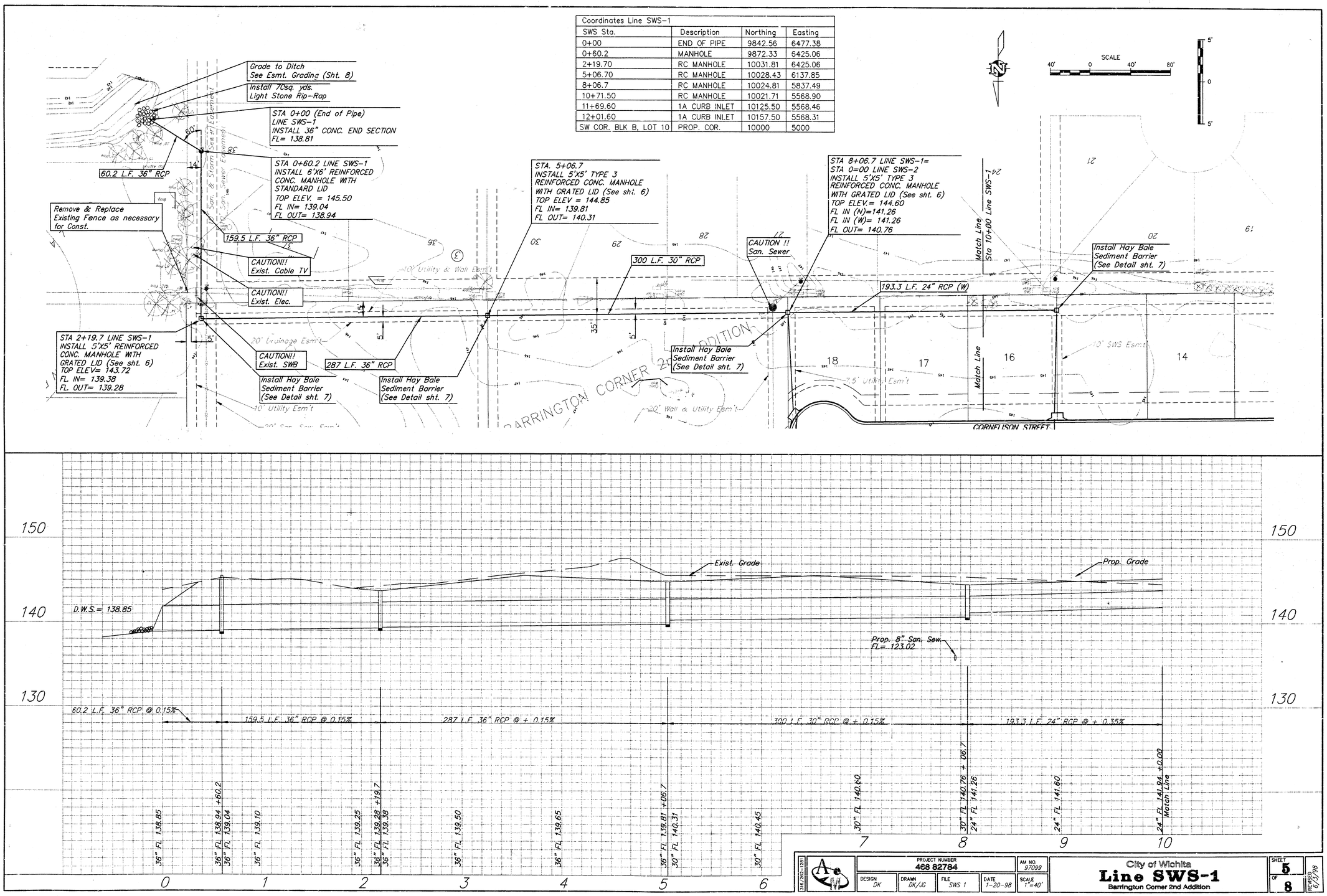

PROJECT NUMBER 468 82784			AM NO. 97099	City of Wichita **Line SWS-1** Barrington Corner 2nd Addition	SHEET 5 OF 8
DESIGN DK	DRAWN DK/JG	FILE SWS 1	DATE 1-20-98	SCALE 1"=40'	REVISED 6/3/98

316/262-1281

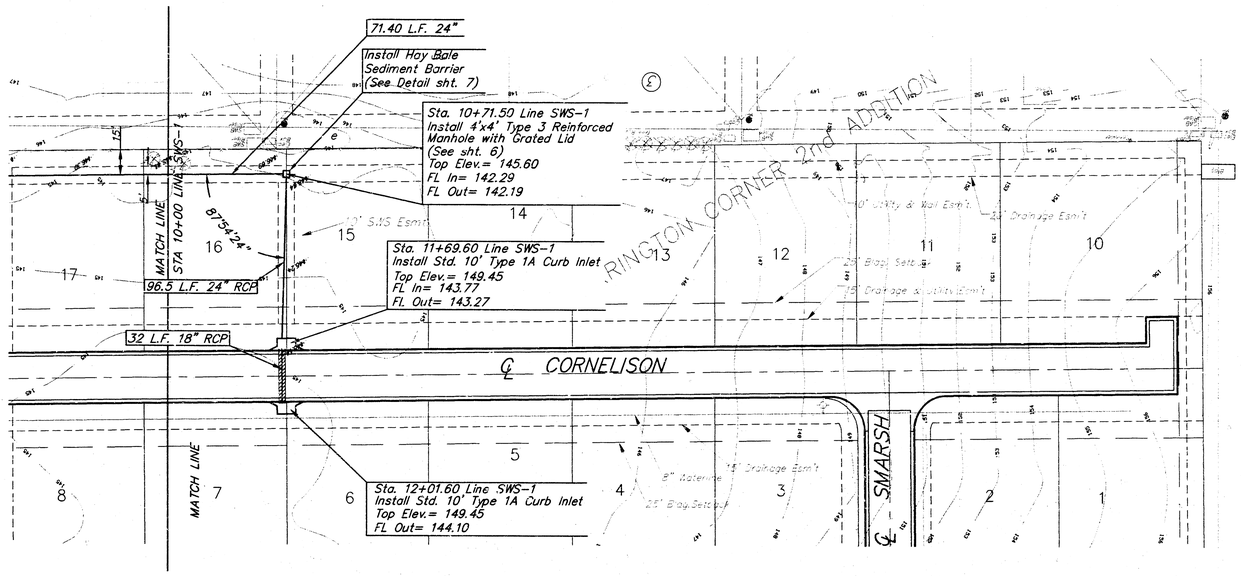

BENCHMARK
RR Spike in power pole
Northeast corner of 21st & Ridge
Elev. = 143.30 City Datum

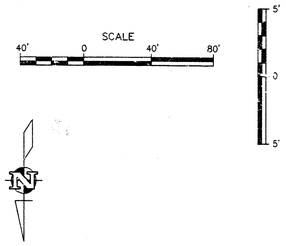

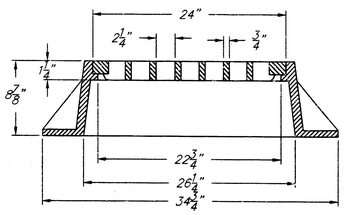

NOTE: Grate Shall be Deeter 1931 or Approved Equivalent.

Grate Detail

Coordinates Line SWS-1			
SWS Sta.	Description	Northing	Easting
0+00	END OF PIPE	9842.56	6477.38
0+60.2	MANHOLE	9872.33	6425.06
2+19.70	RC MANHOLE	10031.81	6425.06
5+06.70	RC MANHOLE	10028.43	6137.85
8+06.7	RC MANHOLE	10024.81	5837.49
10+71.50	RC MANHOLE	10021.71	5568.90
11+69.60	1A CURB INLET	10125.50	5568.46
12+01.60	1A CURB INLET	10157.50	5568.31
SW COR. BLK B, LOT 10	PROP. COR.	10000	5000

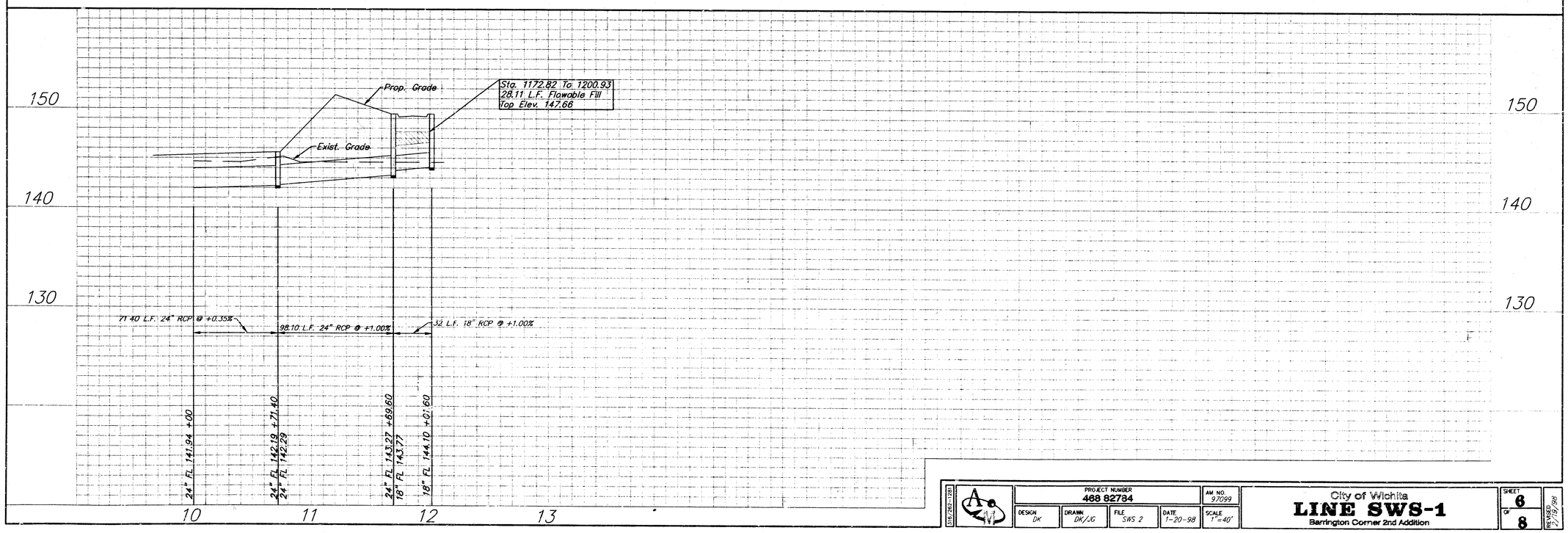

316/262-1281	PROJECT NUMBER 468 82784			AM NO. 97099	City of Wichita **LINE SWS-1** Barrington Corner 2nd Addition
	DESIGN DK	DRAWN DK/JG	FILE SWS 2	DATE 1-20-98	SCALE 1"=40'

SHEET 6 OF 8

REVISED 2/19/98

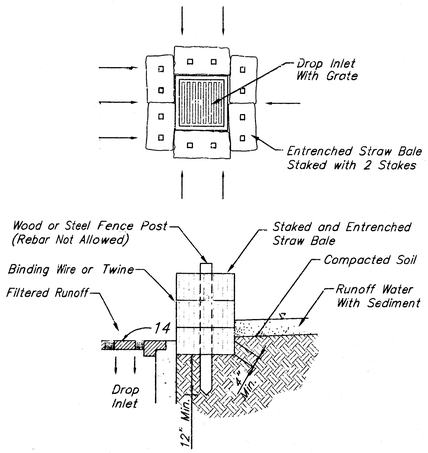

Straw Bale Barrier Detail

Note: Straw Bale Barriers to be Paid per Each as Inlet Sediment Barriers.

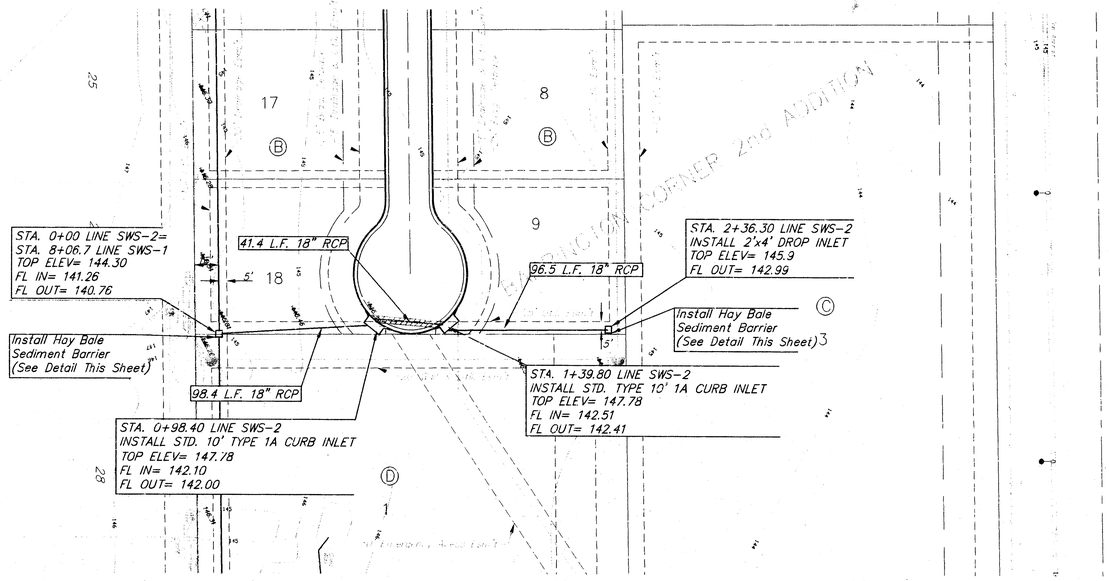

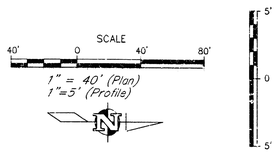

BENCHMARK:
RR Spike in power pole
Northeast corner of 21st & Ridge
Elev. = 143.30 City Datum

Coordinates Line SWS-2			
SWS Sta.	Description	Northing	Easting
0+98.40	RC MANHOLE	10123.84	5832.88
1+39.80	RC MANHOLE	10167.52	5831.51
2+36.30	2'X4' DROP INLET	10269.06	5834.32

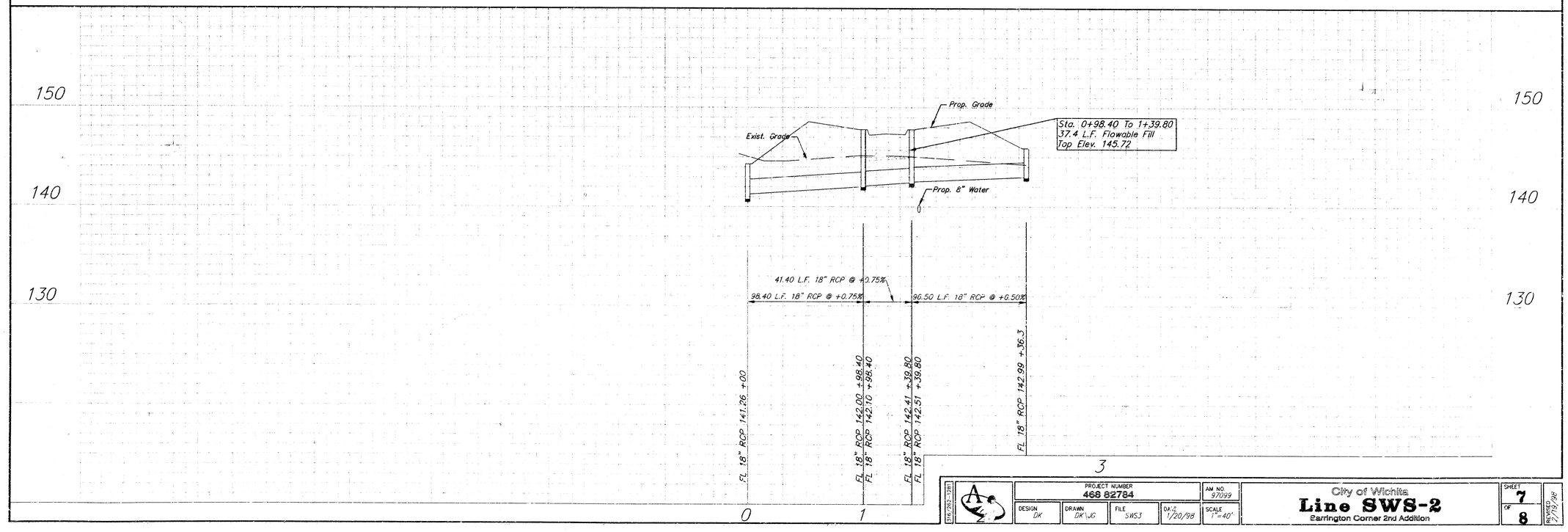

316/262-1281	PROJECT NUMBER 468 82784			AM NO. 97099	City of Wichita **Line SWS-2** Barrington Corner 2nd Addition	SHEET 7 OF 8
	DESIGN DK	DRAWN DK\JG	FILE SWS3	DATE 1/20/98	SCALE 1"=40'	REVISED 2/19/98

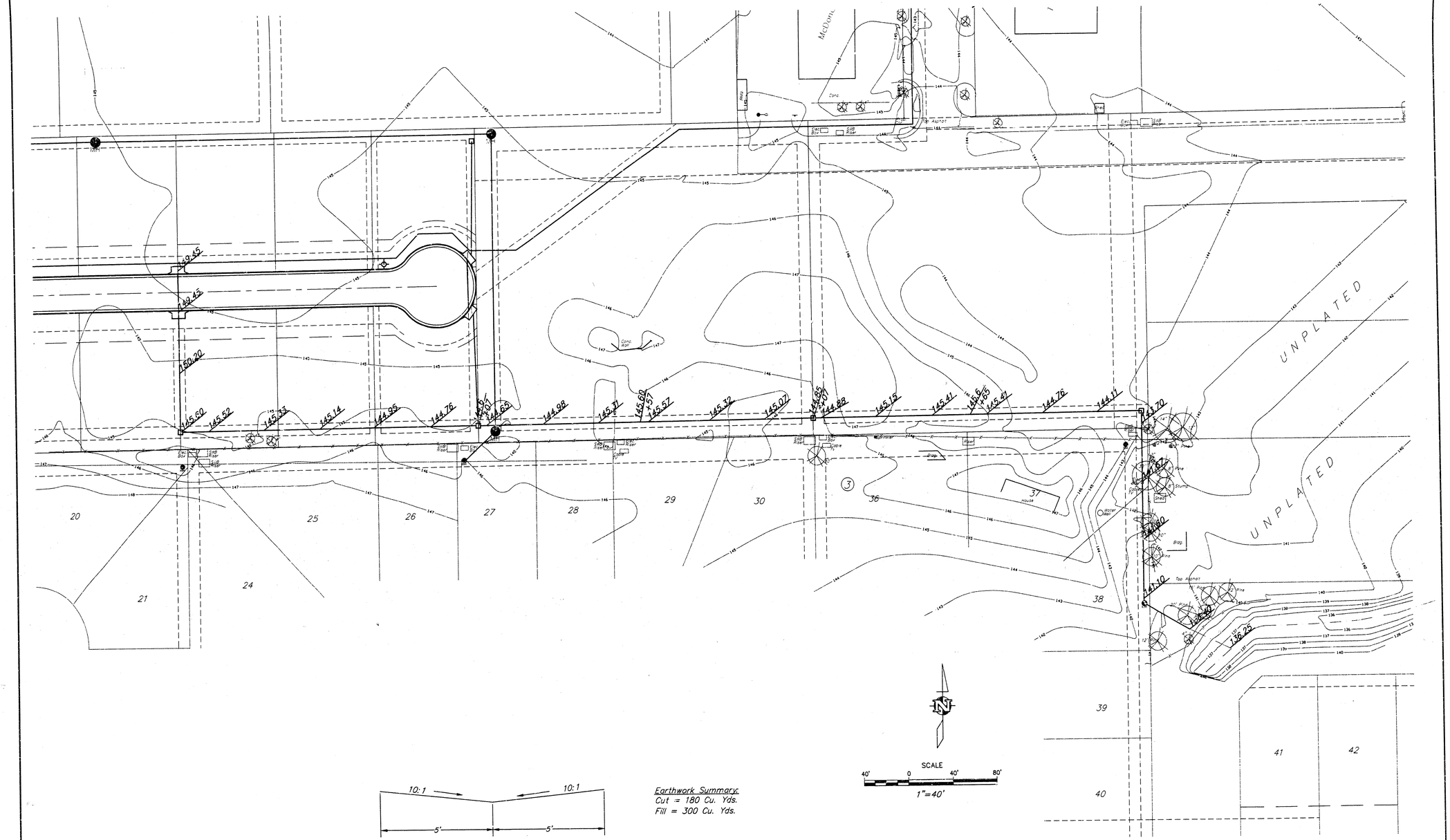

Typical Section – Esement Grading

Earthwork Summary:
Cut = 180 Cu. Yds.
Fill = 300 Cu. Yds.

316/262-1281	PROJECT NUMBER 468-82784				AM NO. 97099	City of Wichita **Easement Grading** Barrington Corner 2nd Addition	SHEET 8 OF 8
	DESIGN CK	DRAWN DK\JG	FILE swsesmt	DATE 2/16/98	SCALE 1"=40'		REVISED 2/19/98

11-10-80-91