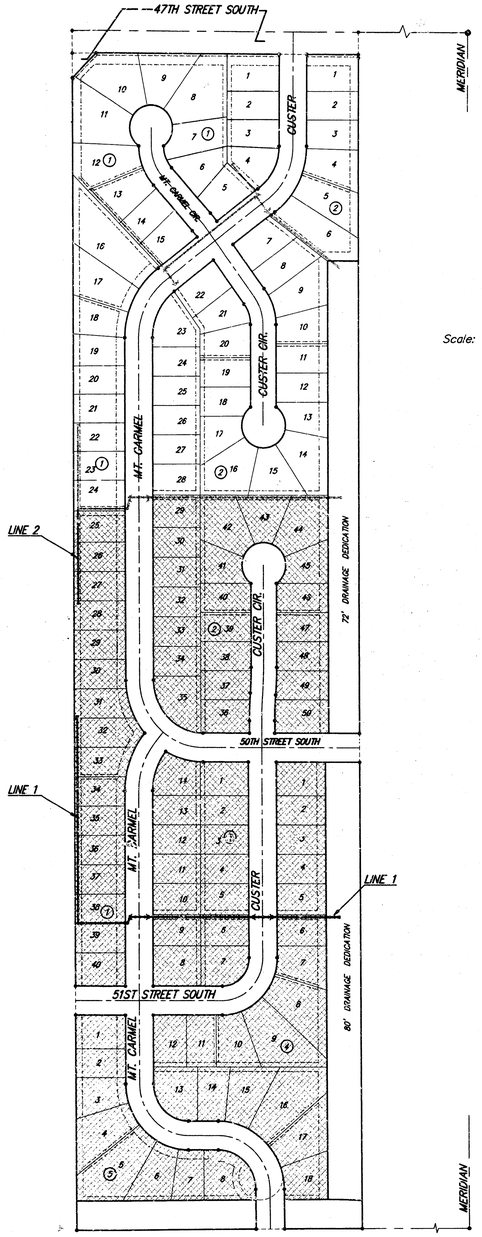

Scale: 1" = 150'

Benefit District

STORM WATER SEWER #499

to serve

Stonebriar Addition - Phase II

CITY OF WICHITA, KANSAS

Michael E. Lindebak, P.E. City Engineer

Project Number

468-82801

Index Code:

751156

Sheet Index

Title Sheet	1
Line 1	2–3
Line 2	4
Easement Grading Plan	5
Shallow Manhole Detail	6
Ring & Cover Detail	7
Drop Inlet Detail	8
Special Yard Inlet Detail	9
Single Type 1A Inlet Detail	10
Copy of Plat	11

Benchmarks

Railroad Spike in Power Pole Locatea 27' South and 402' East of the Northwest Corner of the NE 1/4, Section 24, TWP. 28–S, R–1–W.

Elevation = 92.98 City Datum

City of Wichita Disc Located 44' North and 30' East of the Centerlines of 47th Street South and Meridian.

Elevation = 91.78 City Datum

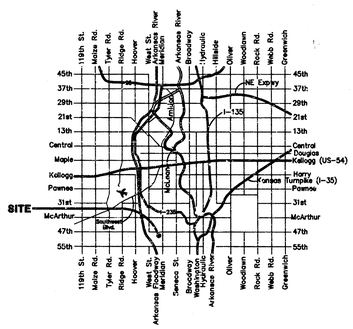

Vicinity Map

GENERAL NOTES:

1. *Contractor will be required to provide notice to utility companies a minimum of twenty–four (24) hours prior to any excavation, as follows:*

   Kansas One–Call 687–2470

   The Contractor must notify the following in case of an emergency:

Cablevision	262–4270
or	263–2061
K.P.L. Gas Service Company	263–7511
Kansas Gas & Electric Company	264–1141
Peoples Nat. Gas Company	942–8350
Southwestern Bell Telephone Company	1–571–2611
City of Wichita Water Department	268–4908
City of Wichita Sewer Maintenance	268–4071

2. *Utility service lines, poles, valve boxes, meters, and etcetera are to be adjusted as necessary by others prior to construction unless the plans specifically call for their adjustment by the Contractor or unless the plans specifically identify a utility to be adjusted by its owner during construction. Existing utilities and their location, as shown on the plans, represent the best information obtainable for design. The contractor will be required to work around existing utilities within the right–of–way which do not conflict with proposed construction.*

3. *Rubble from the removal of miscellaneous structures and excess excavation which is to be wasted shall be disposed of on sites to be provided by the Contractor. These sites shall be approved by the Engineer as to suitability, appearance and site location. Locations that, in the opinion of the Engineer, will leave an unsightly appearance will not be approved. All disposal sites must be approved by the Kansas Department of Health and Environment. Material either stockpiles or disposed of in a flood plain would a Kansas State Board of Agriculture permit. Any material dumped in waters of the United States or wetlands is subject to U.S. Corps. of Engineers permitting regulations. Any material buried or stockpiled beyond approved construction limits would require additional archaeological investigations unless buried in a previously approved borrow location.*

4. *Trees and shrubs in public right–of–way which are in direct conflict with proposed new construction shall be removed by the Contractor with the Engineer's approval. Trees and shrubs which are not in direct conflict with proposed new construction shall be saved and protected from damage.*

5. *The Contractor shall be responsible for preserving property irons. The Contractor will be required to re–establish any property irons which are damaged or destroyed by his construction operations. Such irons shall be re–established by a licensed land surveyor in accordance with state law.*

6. *All areas disturbed by construction shall be seeded at 300 lbs./acre with Rye Grass immediately following construction in that area. Contractor shall prepare ground per City specifications prior to seeding.*

7. *All excess excavation from easement grading shall remain on site. Contractor shall contact engineer to determine stockpile location.*



BAUGHMAN COMPANY P. A.
ENGINEERING & SURVEYING
316/262–7271 • 315 ELLIS • WICHITA, KANSAS 67211

Benchmark:

Railroad Spike in Power Pole Located 27' South and 402' East of the Northwest Corner of tho NE 1/4, Section 24, TWP. 27-S, R-1-W.

Elevation = 92.98 City Datum

City of Wichita Disc Located 44' North and 30' East of the Centerlines of 47th Street South and Meridian.

Elevation = 91.78 City Datum

SCALE:
1" = 20' HORIZONTAL
1" = 5' VERTICAL
● = IRON

STONEBRIAR ADDITION

UNPLATTED

E.L. Stonebriar Addition

80' Drng. Dedication

20' Drng. & Util. Esm't

Future 8" San. Sewer Crossing

LINE 1

34' Fc-Fc

64' R/W

Construct Erosion Control Straw Bale Barrier Around Drop Inlet. See Detail, Sheet 3.

Construct Erosion Control Straw Bale Barrier Around Curb Inlets. See Detail, Sheet 3.

Sta. 3+16.6 Line 1 Const. Std. Double Drop Inlet (2'x4') Top Elev. = 86.10

Sta. 5+03.1, Line 1 Const. Std 5' Dia. Type "B" Shallow Manhole. Top Elev. = 86.70 Match Point

20' Drng. Esm't (by Sep. inst.)

Future 8" Wtr Line Crossing

CAUTION! 8" San. Sewer Crossing

CUSTER

MT. CARMEL

Future 8" Wtr Line

Sta. 0+05.0, Begin Line 1 Install 30" End Section & Extend 30" R.C.P. West.

Install 20 S.Y. of Heavy Stone Rip-Rap as Indicated

Sta. 1+96.5, Line 1 Const. Std. Type-1A Single Curb Inlet. (6'4"x4'4") Top Elev. = 87.80

Sta. 1+55.2 to Sta. 1+96.5 Install 41.3 L.F. Flowable Fill Per City Specifications. Fill to Elev. 84.40

Sta. 1+55.2, Line 1 Const. Std. Type-1A Single Curb Inlet. (6'4"x4'4") Top Elev. = 87.80

Sta. 4+46.7, Line 1 Const. Std. Type-1A Single Curb Inlet. (6'4"x4'4") Top Elev. = 86.50

Sta. 4+46.7 to Sta. 4+88.0 Install 41.3 L.F. Flowable Fill Per City Specifications. Fill to Elev. 84.50

Sta. 4+88.0, Line 1 Const. Std. Type-1A Single Curb Inlet. (6'4"x5'4") Top Elev. = 86.50

20' Utility Easement

Existing 50.67'

Future 4 Wide

Future 8" Wtr

Future 8" San. Sewer

Future 8" Wtr

Future 8" Wtr

Future 8" Wtr

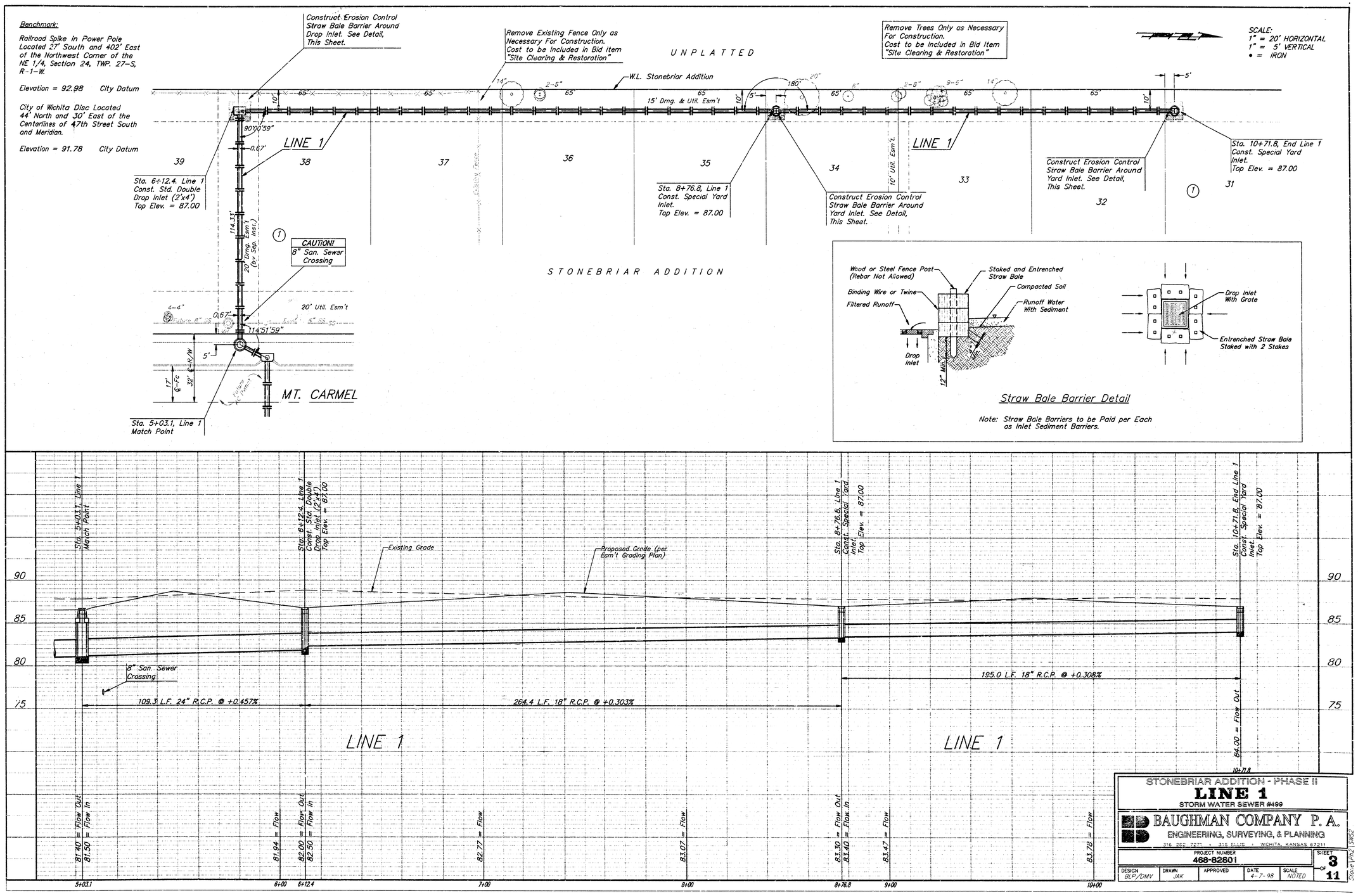

STONEBRIAR ADDITION - PHASE II

LINE 1

STORM WATER SEWER #499

BAUGHMAN COMPANY P. A.

ENGINEERING, SURVEYING, & PLANNING

316 262 7271 • 315 ELLIS • WICHITA, KANSAS 67211

PROJECT NUMBER					SHEET
468-82801					3 OF 11
DESIGN BLP/DMV	DRAWN JAK	APPROVED	DATE 4-7-98	SCALE NOTED	

Stone\Ph2\SWS2

Benchmark:

Railroad Spike in Power Pole Located 27' South and 402' East of the Northwest Corner of the NE 1/4, Section 24, TWP. 27-S, R-1-W.

Elevation = 92.98 City Datum

City of Wichita Disc Located 44' North and 30' East of the Centerlines of 47th Street South and Meridian.

Elevation = 91.78 City Datum

Remove Trees Only as Necessary For Construction. Cost to be Included in Bid Item "Site Clearing & Restoration"

SCALE:
1" = 20' HORIZONTAL
1" = 5' VERTICAL
• = IRON

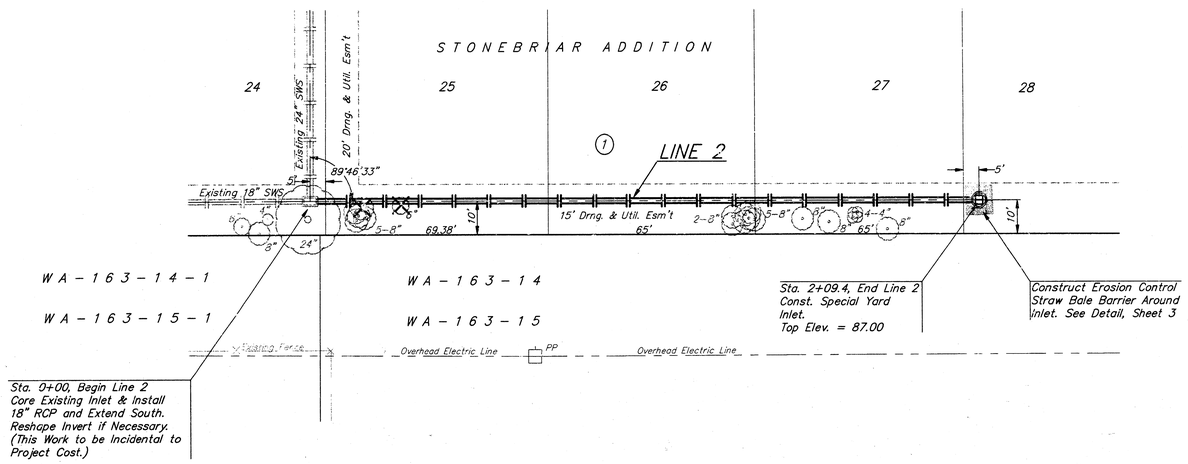

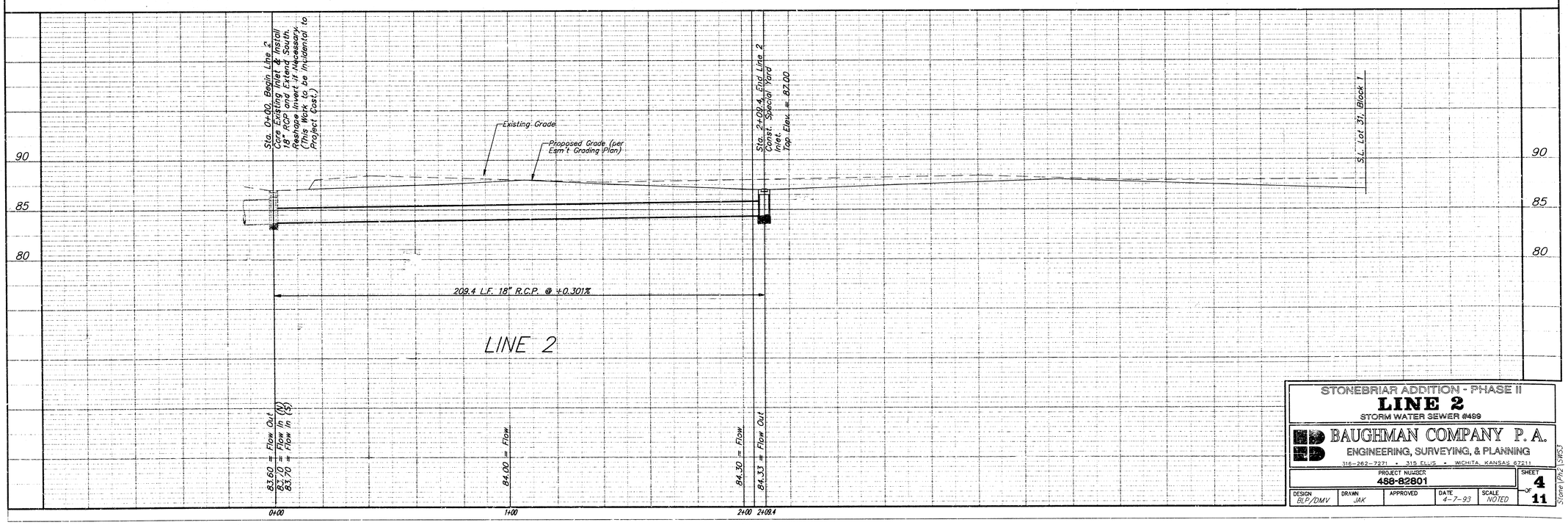

STONEBRIAR ADDITION - PHASE II

LINE 2

STORM WATER SEWER #499

BAUGHMAN COMPANY P. A.
ENGINEERING, SURVEYING, & PLANNING
316-262-7271 • 315 ELLIS • WICHITA, KANSAS 67211

PROJECT NUMBER					SHEET
488-82801					4 of 11
DESIGN	DRAWN	APPROVED	DATE	SCALE	
BLP/DMV	JAK		4-7-93	NOTED	

Stone\PH2\SWS3

Railroad Spike in Power Pole Located 27' South and 402' East of the Northwest Corner of the NE 1/4, Section 24, TWP. 27-S, R-1-W.

Elevation = 92.98 City Datum

City of Wichita Disc Located 44' North and 30' East of the Centerlines of 47th Street South and Meridian.

Elevation = 91.78 City Datum

Scale: 1" = 60'
• = Iron

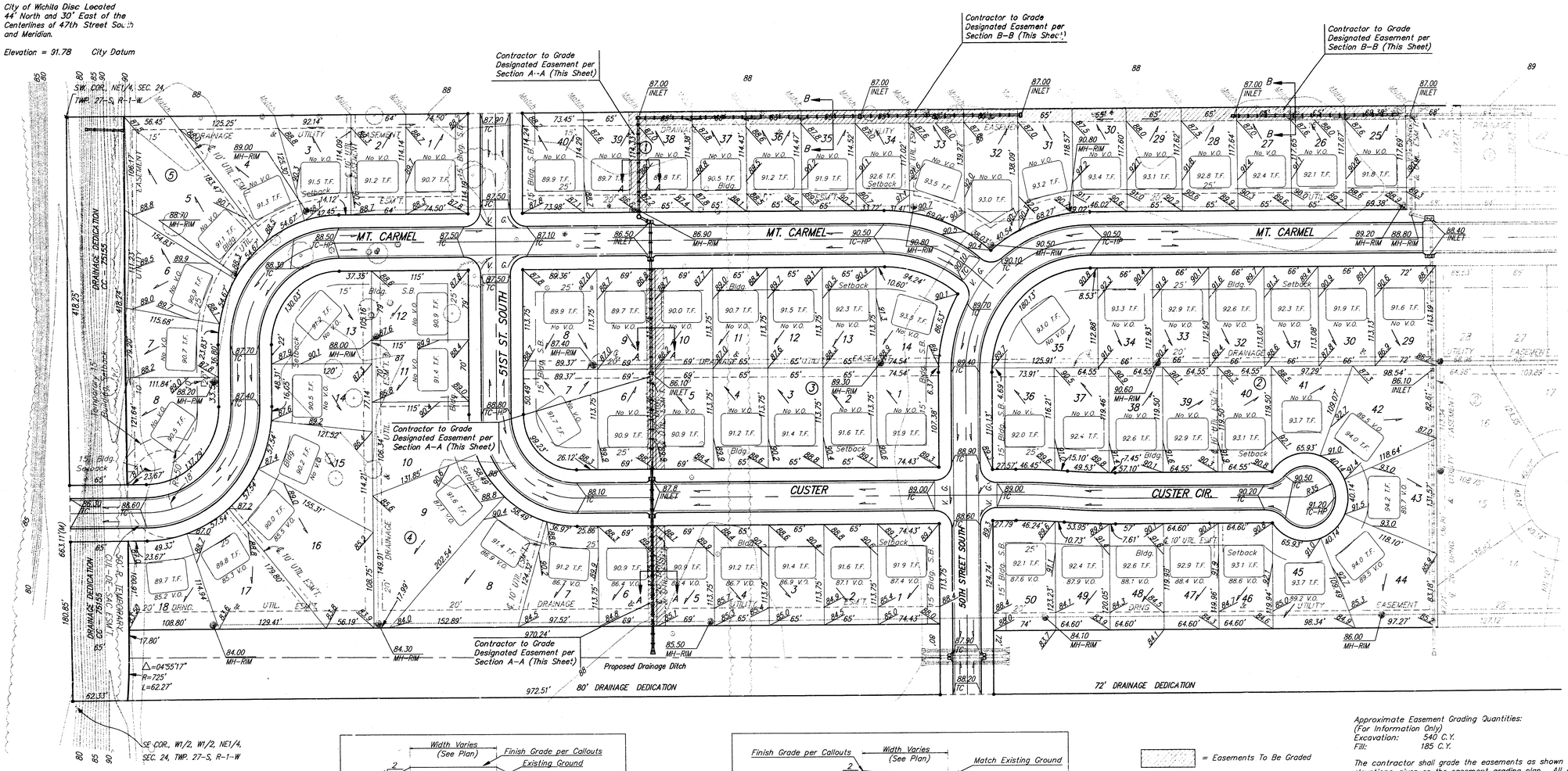

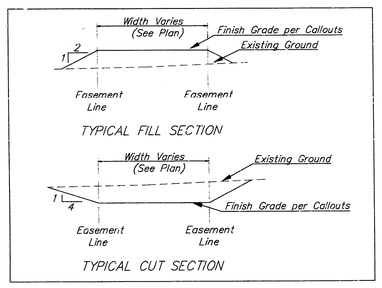

SECTION A-A

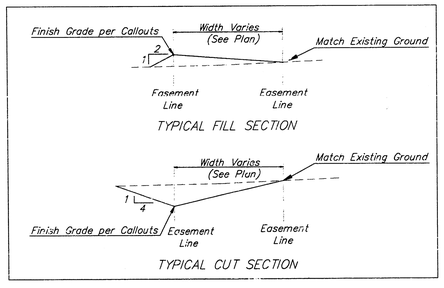

SECTION B-B

= Easements To Be Graded

Approximate Easement Grading Quantities:
(For Information Only)
Excavation: 540 C.Y.
Fill: 185 C.Y.

The contractor shall grade the easements as shown to the elevations given on the easement grading plan. All costs for grading shall be incidental to the Easement Grading Bid Item.

The contractor shall 'straight' grade the easements between the elevations given. Where a callout designates 'Match', the contractor will grade to the existing ground elevation.

STONEBRIAR ADDITION - PHASE II

ESM'T GRADING PLAN

WICHITA, KANSAS

BAUGHMAN COMPANY P.A.
ENGINEERING, SURVEYING, & PLANNING
316-262-7271 • 315 ELLIS • WICHITA, KANSAS 67211

PROJECT NUMBER					SHEET
448-82801					5 OF 11
DESIGN	DRAWN	APPROVED	DATE	SCALE	
BLP/DMV	JAK		3/26/98	NOTED	

Stone\Ph2\swsesmt

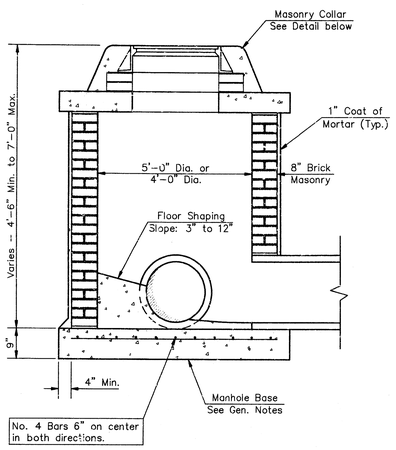

SHALLOW TYPE "A" MANHOLE

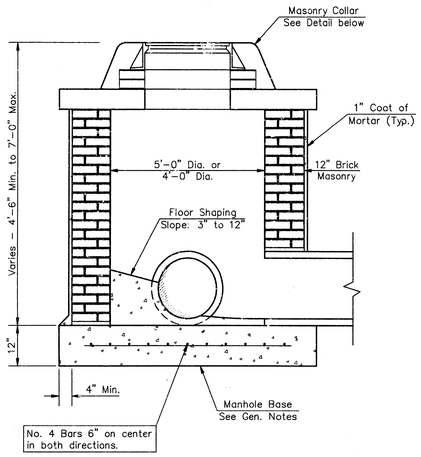

SHALLOW TYPE "B" MANHOLE

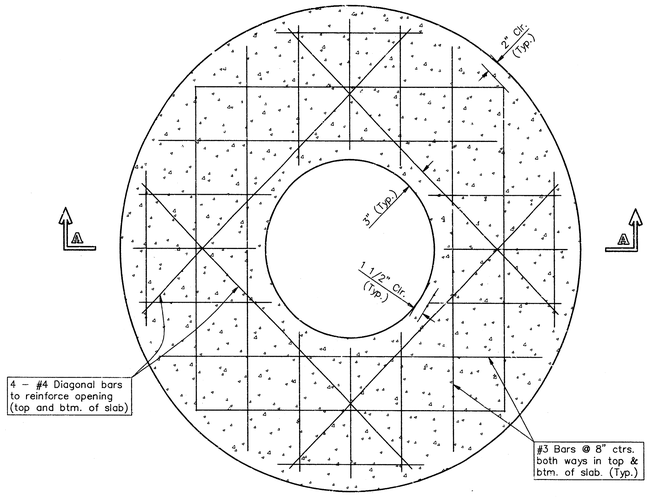

PLAN

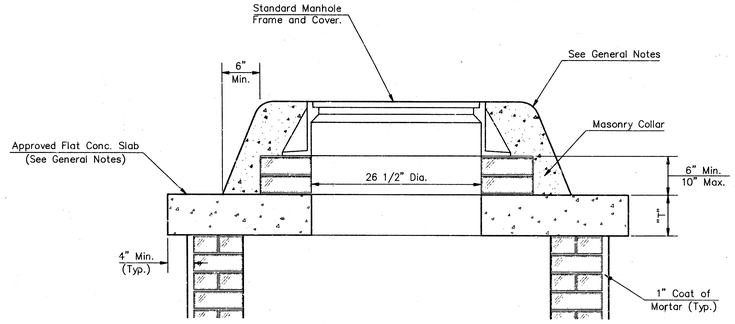

MASONRY COLLAR DETAIL

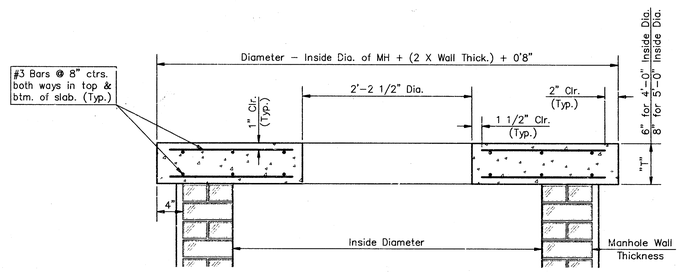

SECTION A-A

FLAT CONCRETE SLAB DETAILS

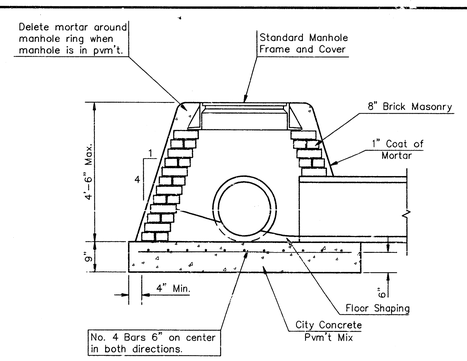

SPECIAL SHALLOW TYPE "A" MANHOLE

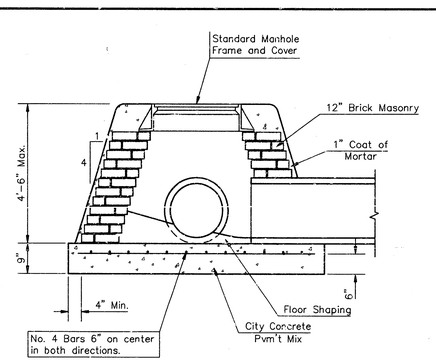

SPECIAL SHALLOW TYPE "B" MANHOLE

GENERAL NOTES

1. Mortar used in masonry construction shall contain 8 sacks of cement per cubic yard. Concrete used in manhole bases shall conform to the requirements of concrete for concrete pavement construction as specified in the city standard paving specifications using city concrete cement mix without air entraining admixture. Mortar shall be placed around the manhole ring as shown on the drawings when manholes are constructed in unpaved areas. Type "A" shallow manholes can be used on sewers when the manhole is not located within public street pavement. Manholes constructed where pipe sizes are smaller than 24" shall have an inside diameter of 4'. Manholes constructed where pipe sizes are 24" or larger shall have an inside diameter of 5'. Completed manhole shall be without leaks and water tight.

2. Reinforcing steel shall be installed in the manhole bases and shall consist of no. 4 bars placed on 6" centers in both directions. The manhole base reinforcement shall be placed 6" above the bottom of the manhole base. All costs for furnishing and installing reinforcing steel shall be included in the unit price bid for the manhole.

3. The floors of all manholes shall be shaped with flow channels such that the manholes will be self cleaning and free of areas where solids could be deposited as sewage flows through the manhole from all inlet pipes to the outlet pipe. Flow channels shall be formed to match the bottom halves of the inflowing pipes and the outflowing pipe as shown by the drawings. Manhole floors shall have slopes of 3 inches per foot in the areas outside of the flow channels sloped toward the flow channels. Pipes laid through manholes shall have the top half removed to neat lines for the full inside diameter of the manhole. Manhole floors shall then be shaped around the bottom half of the pipe which forms the flow channel.

4. Pipes installed within the excavation made for the manhole shall be cradled with concrete to the limits of the manhole excavation. When clay pipe is used, the cradle shall extend to the first joint outside the manhole. The cradle shall be terminated at the clay pipe joint in a manner which will maintain the flexibility of the joint. Cost of cradle within manhole excavation or to clay pipe joints adjacent to manhole shall be included in the unit price bid for the manhole.

5. Manhole cover castings and manhole frame castings shall conform to the requirements as indicated in the standard specifications and as shown in the standard detail drawings.

6. The crowns of inflowing pipes shall never be set lower than the crown of the outflowing pipe.

7. Standard shallow manholes type "A" and "B" shall be paid for at the unit price bid per each for the type and diameter indicated. Standard special shallow manholes type "A" and "B" shall be paid for at the unit price bid per each for the type indicated. All standard shallow manhole diameters will be 4' unless indicated otherwise.

8. All brick used in manhole construction shall meet Grade SW of ASTM C652 or C62-87.

CITY OF WICHITA, KANSAS

Std. Manhole Detail

TYPE "A" AND TYPE "B"

BAUGHMAN COMPANY P. A.
ENGINEERING, SURVEYING, & PLANNING
316-262-7271 • 315 ELLIS • WICHITA, KANSAS 67211

PROJECT NUMBER				SHEET
468-82801				6 OF 11
DESIGN	DRAWN	APPROVED	DATE	SCALE
C.O.W.	Staff			NONE

DETAILS\STDMH

MANHOLE FRAME AND COVER DETAIL

ADOPTED AS STANDARD DESIGN BY
CITY OF WICHITA, KANSAS

MANHOLE COVER
Weight = 180 Lbs.

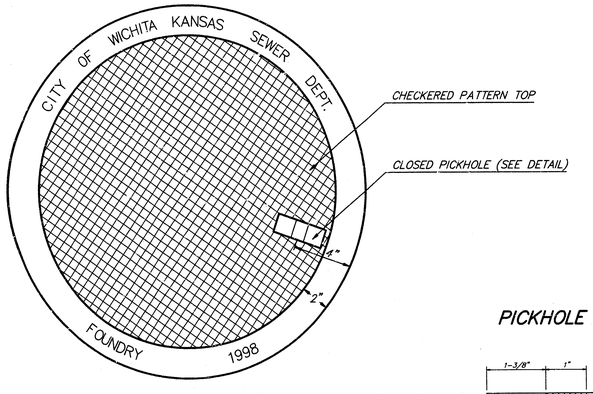

TOP VIEW

PICKHOLE DETAIL

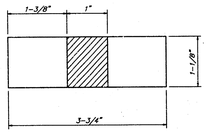

TOP VIEW

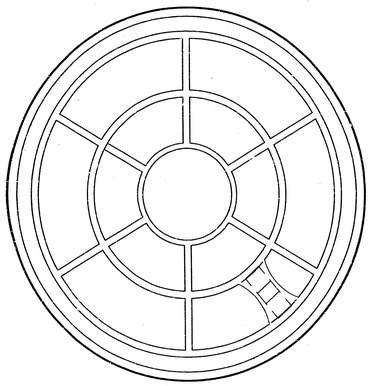

BOTTOM VIEW

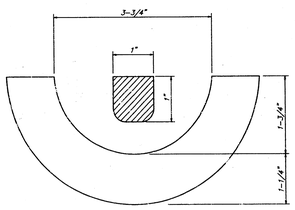

SECTION VIEW

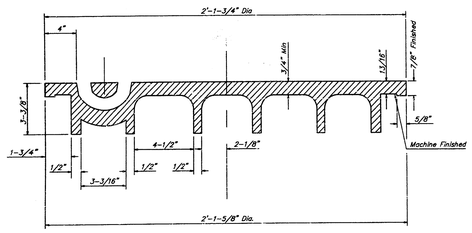

SECTION VIEW

MANHOLE FRAME
Weight = 240 Lbs.

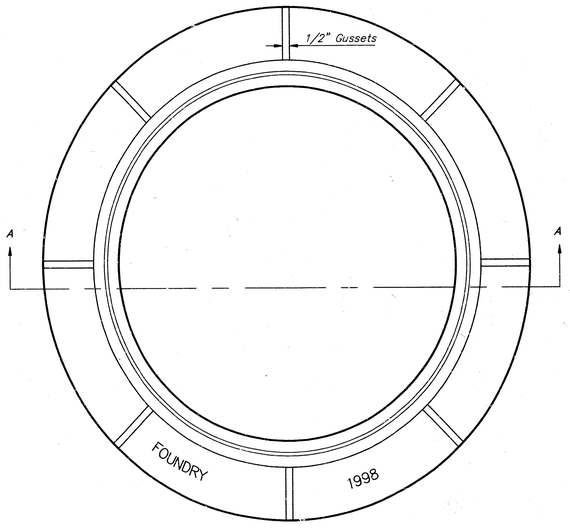

TOP VIEW

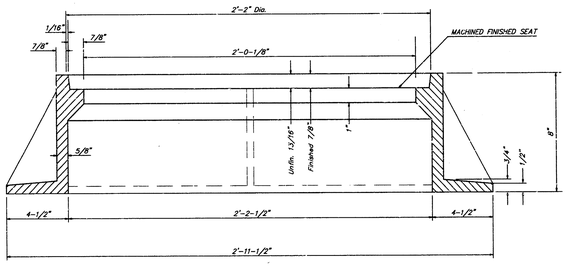

SECTION A-A

GENERAL NOTES

MANHOLE CASTINGS SHALL BE MANUFACTURED USING GOOD QUALITY GRAY IRON CONFORMING TO CLASS 30 OF A.S.T.M. DESIGNATION A-48. DIMENSIONS AND WEIGHTS SHOWN ON THE DETAILED DRAWINGS SHALL BE CONSIDERED AS MINIMUM REQUIREMENTS AND ANY DEVIATIONS FROM THE DIMENSIONS SHOWN MUST BE SPECIFICALLY APPROVED. THE FINISHED CASTINGS SHALL BE OF UNIFORM QUALITY, FREE FROM BLOWHOLES, POROSITY, HARD SPOTS, SHRINKAGE DISTORTIONS OR OTHER DEFECTS.

MANHOLE CASTINGS SHALL BE COATED WITH AN ASPHALT PAINT RESULTING IN A SMOOTH, TOUGH AND TENACIOUS COATING WHICH IS NOT BRITTLE OR TACKY.

MANHOLE CASTINGS SHALL BE MANUFACTURED SUCH THAT A COVER MANUFACTURED BY ANY ONE FOUNDARY WILL FIT INTERCHANGEABLY INTO A FRAME MANUFACTURED BY ANOTHER FOUNDRY AND STILL MEET ALLOWABLE CLEARANCES AND NON-ROCKING REQUIREMENTS. THIS WILL REQUIRE MANUFACTURING OF THE MATCHING FACES ON THE COVER AND THE FRAME TO CLOSE TOLERANCES.

THE OUTSIDE CIRCUMFERENCE OF THE VERTICAL FACE OF THE COVER AND THE INSIDE CIRCUMFERENCE OF THE VERTICAL FACE IN THE FRAME RECESS SHALL BE MANUFACTURED TO TOLERANCES SUCH THAT THE CLEARANCE BETWEEN THE COVER AND FRAME WILL NOT EXCEED 1/8" AT ANY POINT AROUND THE CIRCUMFERENCE OF THE COVER. THE SEATING SURFACES BETWEEN THE COVER AND FRAME SHALL BE MACHINED SUCH AS THESE SURFACES SHALL MAKE FULL CONTACT FOR THEIR FULL CIRCUMFERENCE TO PRECLUDE THE COVER FROM ROCKING IN THE FRAME.

THE MANHOLE FRAME AND COVER SHALL BE MARKED WITH LETTERING INDICATING THE NAME OF THE MANUFACTURER AND THE YEAR WHEN THE COVER OR FRAME WAS CAST. THE COVER SHALL BE FURTHER IDENTIFIED WITH REGARDS TO OWNERSHIP USING LETTERS AT LEAST 1 INCH IN HEIGHT. THIS IDENTIFICATION SHALL BE "CITY OF WICHITA SEWER DEPARTMENT". THE WORD DEPARTMENT MAY BE ABBREVIATED. THE TEXTURE OF THE TOP SURFACE OF THE COVER SHALL BE MANUFACTURED IN A CHECKERED PATTERN DESIGN AS INDICATED ON THE DRAWINGS. SMOOTH BLOCKOUTS SHALL BE UTILIZED TO HIGHLIGHT THE LETTERING ON THE COVER SURFACE. THE TOTAL AREA OF SMOOTH SURFACE BLOCKOUT SHALL NOT EXCEED THE AREA AS INDICATED ON THE DRAWING. POSITIONING OF SMOOTH BLOCKOUTS AND LETTERING MAY VARY FROM THAT SHOWN ON THE DETAILED DRAWING.

MANHOLE FRAME AND COVER DETAIL
ADOPTED AS STANDARD DESIGN BY
CITY OF WICHITA, KANSAS

BAUGHMAN COMPANY P.A.
ENGINEERING, SURVEYING, & PLANNING
316-262-7271 • 315 ELLIS • WICHITA, KANSAS 67211

PROJECT NUMBER					SHEET
488-82801					7 OF 11
DESIGN	DRAWN	APPROVED	DATE	SCALE	
C.O.W.	Staff		4/98	None	

DETAILS\MARKING

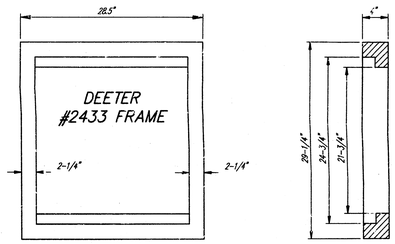

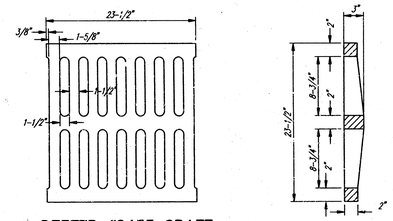

DEETER #2433 GRATE

NOTE: Grates shall be imprinted on the top surface with "CITY OF WICHITA" using letters at least 1" in height. Other marking methods may be approved by the engineer.

24" x 24" Frame and Grate Detail

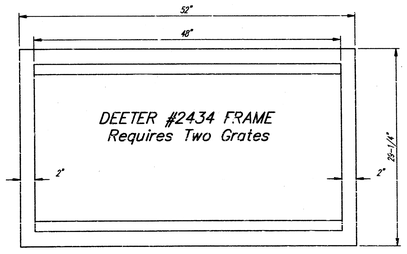



Double 24" x 24" Frame Detail

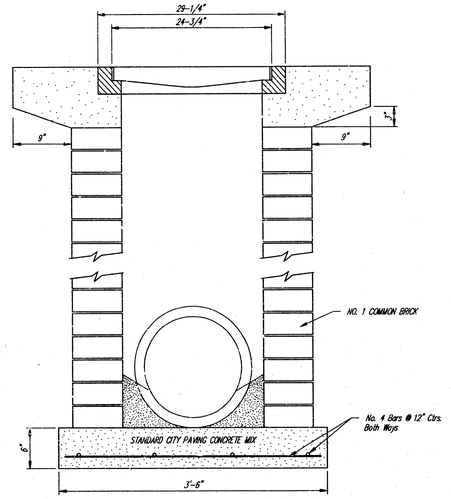

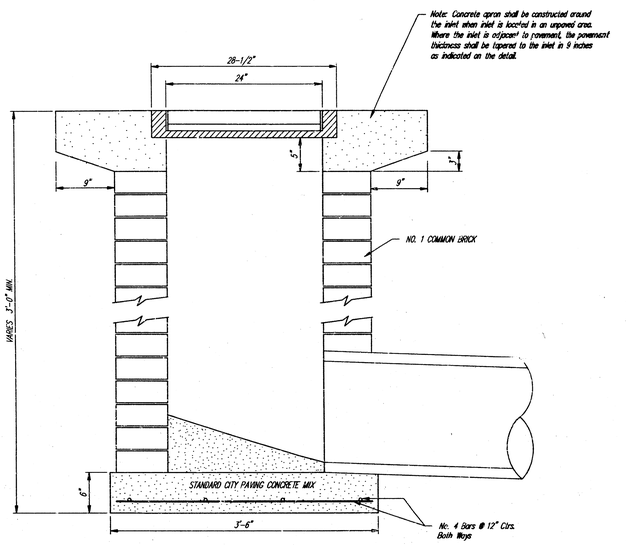

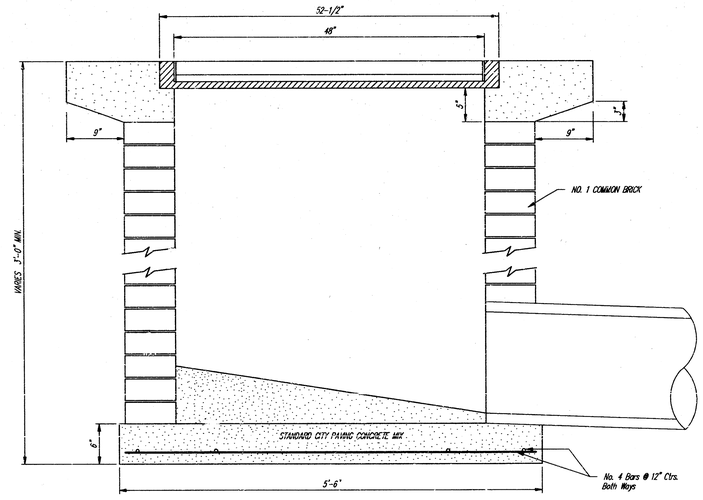

City of Wichita Standard
Drop Inlet

BAUGHMAN COMPANY P. A.
ENGINEERING, SURVEYING, & PLANNING
316-262-7271 • 315 ELLIS • WICHITA, KANSAS 67211

PROJECT NUMBER	SHEET
468-82801	8 OF 11

DESIGN	DRAWN	APPROVED	DATE	SCALE
C.O.W.	Staff		7-97	NONE

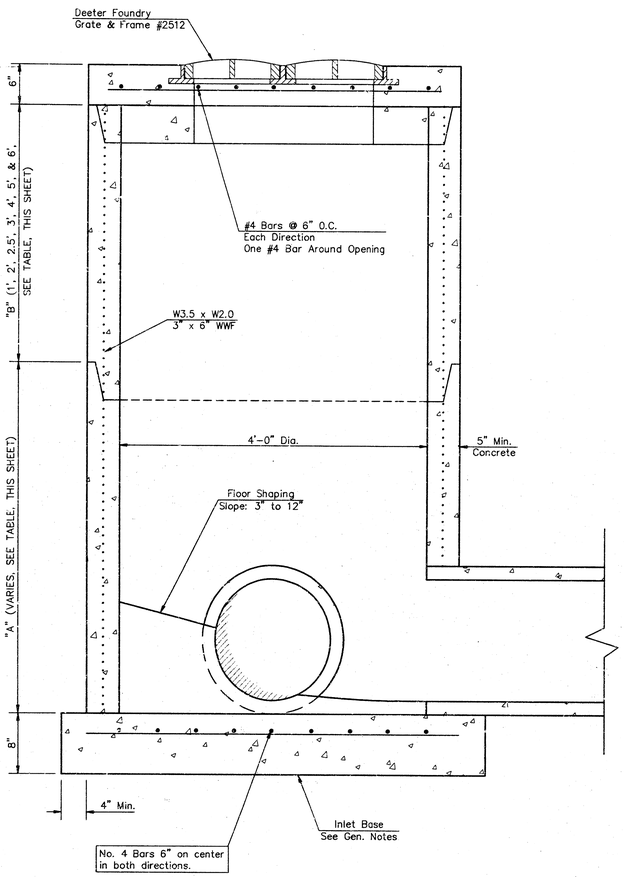

YARD INLET

LINE #	STA.	TOP OF INLET	INLET FLOW	"A"	"B"
1	8+76.8	87.00	83.30	3.2'	--
1	10+71.8	87.00	84.00	2.5'	--
2	2+09.4	87.00	84.33	2.17'	--

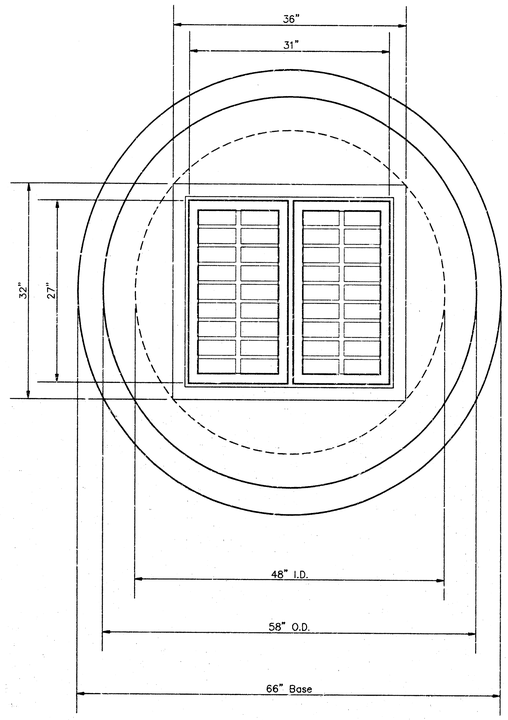

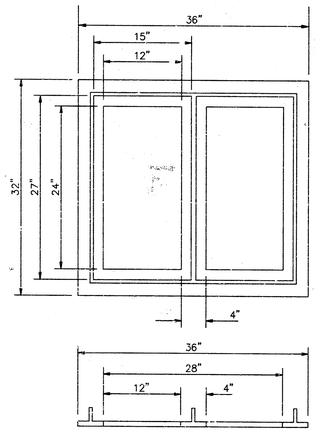

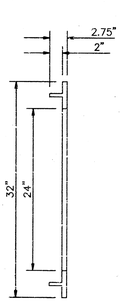

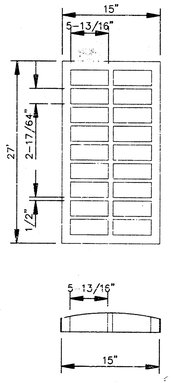

GENERAL NOTES

1. Mortar used in masonry construction shall contain 8 sacks of cement per cubic yard. Concrete used in yard inlet bases shall conform to the requirements of concrete for concrete pavement construction as specified in the city standard paving specifications using city concrete cement mix without air entraining.

2. Reinforcing steel shall be installed in the yard inlet bases and shall consist of no. 4 bars placed on 6" centers in both directions. The yard inlet base reinforcement shall be placed 6" above the bottom of the yard inlet base. All costs for furnishing and installing reinforcing steel shall be included in the unit price bid for the yard inlet.

3. The floors of all yard inlet shall be shaped with flow channels such that the inlets will be self cleaning and free of areas where solids could be deposited. Flow channels shall be formed to match the bottom halves of the inflowing pipes and the outflowing pipe as shown by the drawings. Inlet floors shall have slopes of 3 inches per foot in the areas outside of the flow channels sloped toward the flow channels. Pipes laid through inlets shall have the top half removed to neat lines for the full inside diameter of the inlet. Inlet floors shall then be shaped around the bottom half of the pipe which forms the flow channel.

4. Pipes installed within the excavation made for the inlet shall be cradled with concrete to the limits of the inlet excavation. When clay pipe is used, the cradle shall extend to the first joint outside the inlet. The cradle shall be terminated at the clay pipe joint in a manner which will maintain the flexibility of the joint. Cost of cradle within inlet excavation or to clay pipe joints adjacent to inlet shall be included in the unit price bid for the inlet.

5. Inlet grate castings and inlet frame castings shall conform to the requirements as indicated in the standard specifications and as shown in the standard detail drawing.

6. The crowns of inflowing pipes shall never be set lower than the crown of the outflowing pipe.

7. Joints between inlet sections to be sealed with two two wraps of extruded butyl rubber joint mastic meeting City of Wichita Type "P" Manhole Specifications.

8. Special yard inlet shall be paid for at the unit price bid per each. All standard yard inlet diameters will be 4'.

NOTE: Grates shall be imprinted on the top surface with "CITY OF WICHITA" using letters at least 1" in height. Other marking methods may be approved by the engineer.

DEETER #2512 CATCH BASIN INLET GRATE & FRAME

SPECIAL YARD INLET

BAUGHMAN COMPANY P. A.
ENGINEERING, SURVEYING, & PLANNING
316-262-7271 • 315 ELLIS • WICHITA, KANSAS 67211

PROJECT NUMBER	SHEET
466-82801	9 OF 11

DESIGN	DRAWN	APPROVED	DATE	SCALE
BLP/DMV	JAK		3/26/98	NONE

DETAILS\YARDINLT

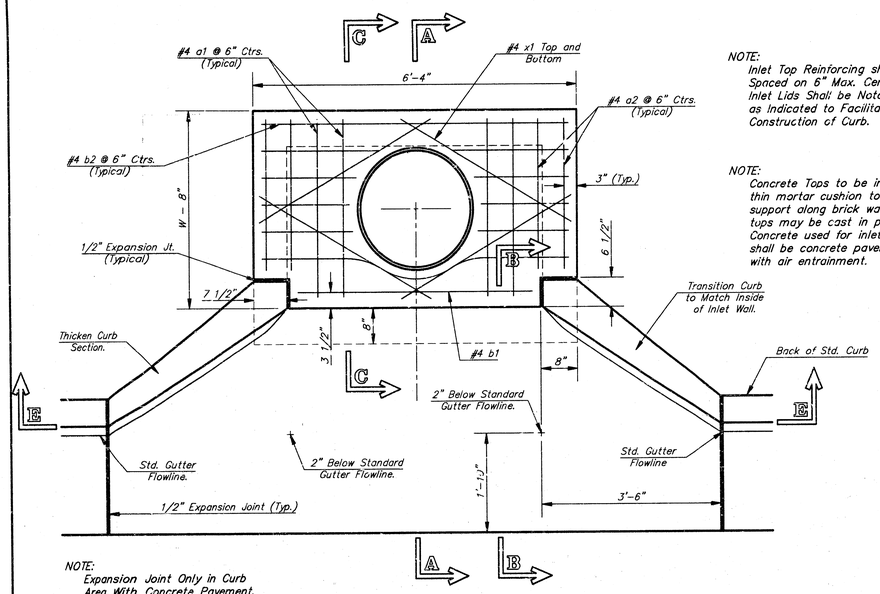

NOTE:
Inlet Top Reinforcing shall be Spaced on 6" Max. Centers. Inlet Lids Shall be Notched Out as Indicated to Facilitate Construction of Curb.

NOTE:
Concrete Tops to be installed on thin mortar cushion to insure full support along brick walls. Concrete tops may be cast in place or precast. Concrete used for inlet construction shall be concrete pavement mix with air entrainment.

NOTE:
Expansion Joint Only in Curb Area With Concrete Pavement.

PLAN

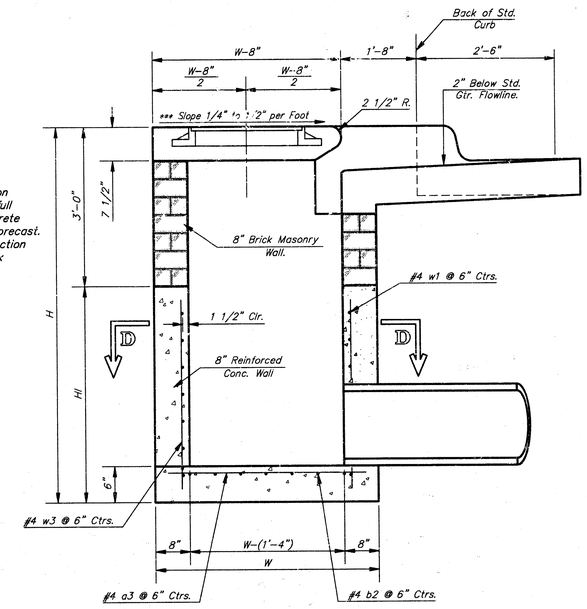

SECTION A-A

***NOTE: Slope of Inlet tops to Match Sidewalk or Parking Slopes within Limits Indicated.

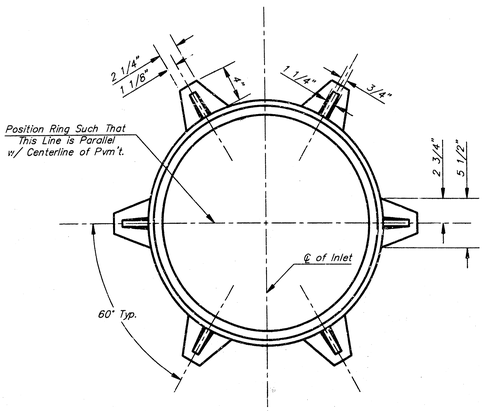

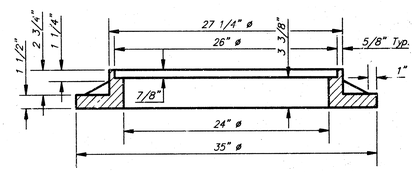

MANHOLE RING AND COVER

Weight = 180 Lbs.

*See City of Wichita Standard Manhole Ring and Cover Detail Sheet for Cover Details to Be Used With Inlet Frame.

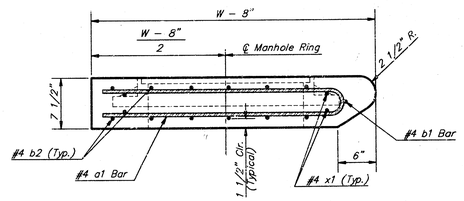

SECTION A-A

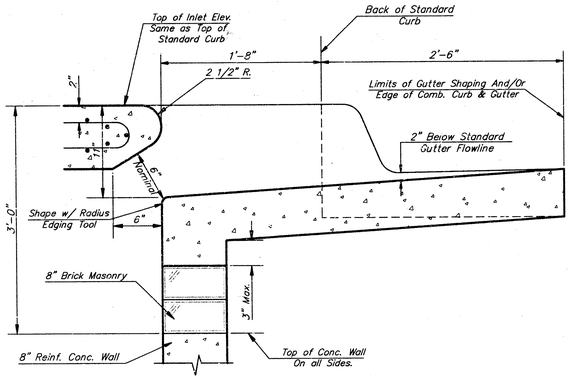

SECTION B-B

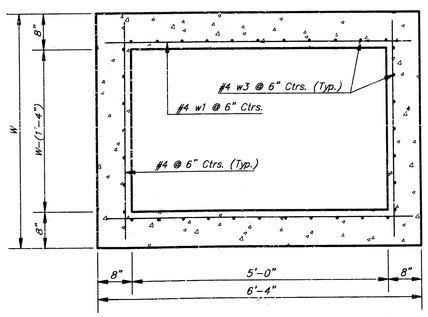

SECTION D-D

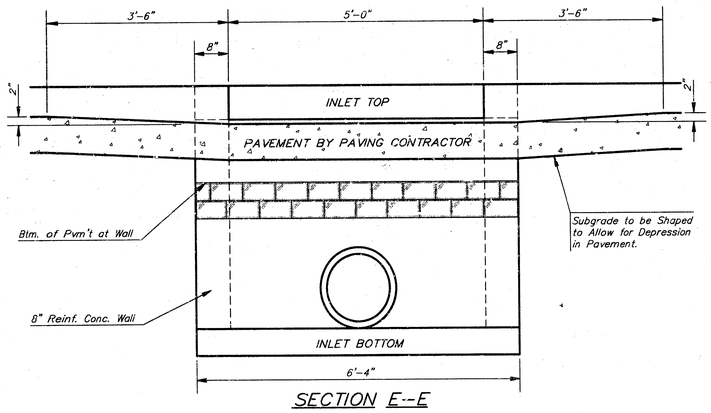

SECTION E--E

NOTE: Contractor shall have the option of constructing 8" brick masonry walls between the concrete inlet base and top on this inlet when W=6'-4" and H=7'-0" or less.

Additional curb and gutter construction necessary to connect set-back inlet to pavement will be paid for at the unit price bid for each inlet hookup.

Inlet invert shall be shaped with 8 sack sand mix concrete to create flow channels and to increase hydraulic efficiency such that the inlet will be self-cleaning between all inlet and/or outlet pipes.

The ends of all pipes installed in inlets shall be cut off flush with the inside face of the inlet wall

PRECAST SLAB AND FLOOR REINFORCING

		W = 4'-4"		W = 5'-4"		W = 6'-4"		W = 7'-4"		W = 8'-4"	
MARK	SIZE	NO.	LENGTH	NO.	LENGTH	NO.	LENGTH	NO.	LENGTH	NO.	LENGTH
* a1	#4	6	6'-7"	6	8'-7"	6	10'-7"	6	12'-7"	6	14'-7"
a2	#4	4	6'-0"	4	8'-0"	4	10'-0"	4	12'-0"	4	14'-0"
a3	#4	13	4'-1"	13	5'-1"	13	6'-1"	13	7'-1	13	8'-1"
b1	#4	1	4'-9"	1	4'-9"	1	4'-9"	1	4'-9"	1	4'-9"
* b2	#4	23	6'-1"	29	6'-1"	35	6'-1"	41	6'-1"	47	6'-1"
x1	#4	8	3'-10"	8	4'-2"	8	4'-6"	8	4'-10"	8	5'-2"

WALL REINFORCING

		W = 4'-4"		W = 5'-4"		W = 6'-4"		W = 7'-4"		W = 8'-4"	
MARK	SIZE	NO.	LENGTH	NO.	LENGTH	NO.	LENGTH	NO.	LENGTH	NO.	LENGTH
w1	#4	①	6'-1"	①	6'-1"	①	6'-1"	①	6'-1"	①	6'-1"
w2	#4	①	4'-1"	①	5'-1"	①	6'-1"	①	7'-1"	①	8'-1"
w3	#4	32	②	36	②	40	②	44	②	48	②

* Field Bend or Cut Reinforcing as Required for Clearance.

① 4 (Hl - 12") (Hl - 21") Rounded down to nearest 0.5'

② Hl - 3"

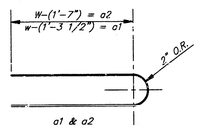

BENDING DIAGRAM

STANDARD CURB INLET PRECAST TOPS

W	PRE-CAST TOP SIZE	PIPE SIZE	CU. YD. CONC.
4'-4"	3'-8" x 6'-4" x 7 1/2"	21" & SMALLER	0.38±
5'-4"	4'-8" x 6'-4" x 7 1/2"	24" & 30"	0.51±
6'-4"	5'-8" x 6'-4" x 7 1/2"	36" & 42"	0.64±
7'-4"	6'-8" x 6'-4" x 7 1/2"	48" & 54"	0.77±
8'-4"	7'-8" x 6'-4" x 7 1/2"	60" & 66"	0.90±

Revised - Feb. 16, 1989

CITY OF WICHITA STANDARD TYPE 1A

Curb Inlet Details

INLET OPENING = 6" x 7'-6"

BAUGHMAN COMPANY P.A.
ENGINEERING, SURVEYING, & PLANNING
316-262-7271 • 313 ELLIS • WICHITA, KANSAS 67211

PROJECT NUMBER 488-82801

SHEET 10 OF 11

DESIGN	DRAWN	APPROVED	DATE	SCALE
C.O.W.	Staff			None

Type1A-5

STONEBRIAR ADDITION

WICHITA, SEDGWICK COUNTY, KANSAS

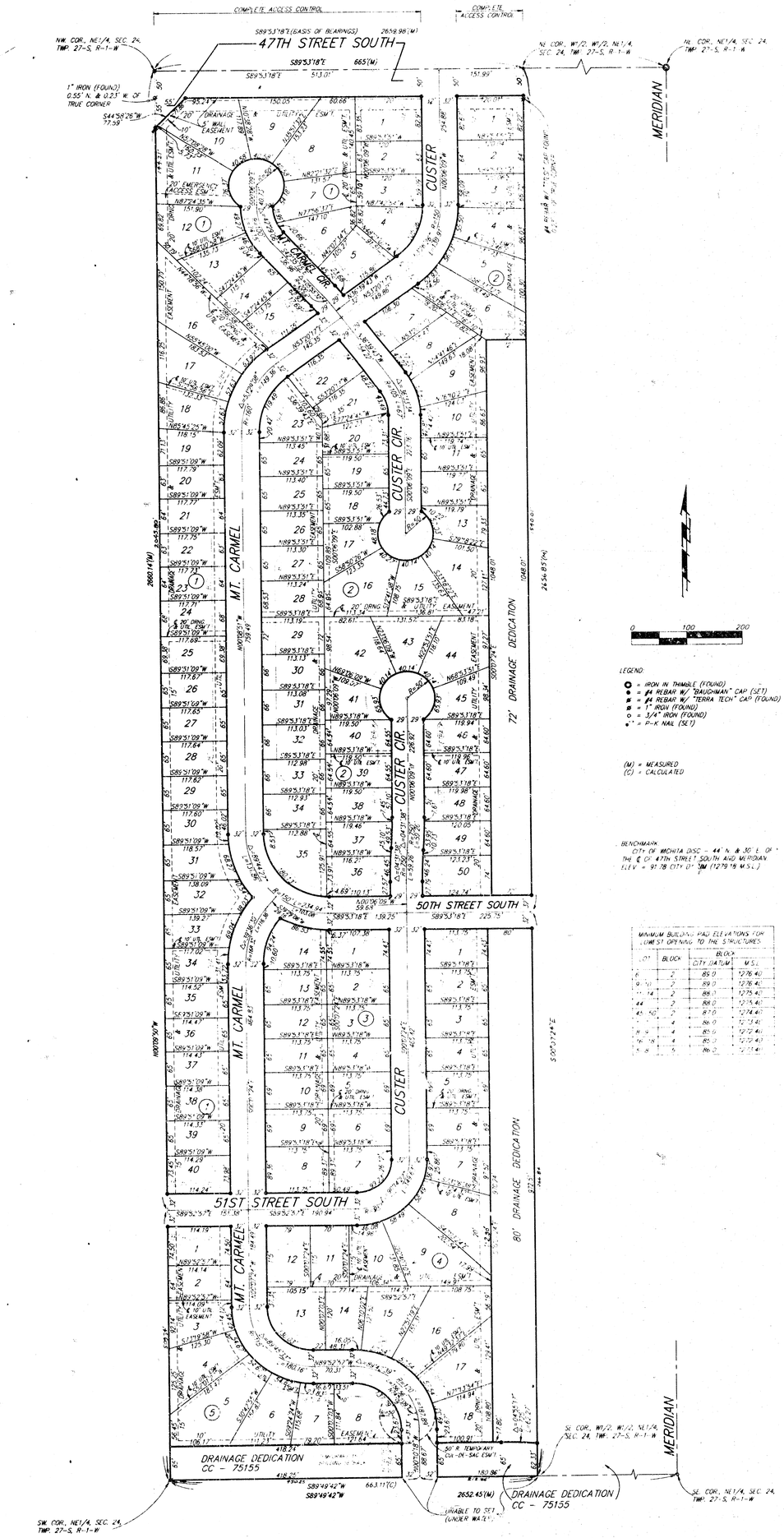

MINIMUM BUILDING PAD ELEVATIONS FOR LOWEST OPENING TO THE STRUCTURES			
LOT	BLOCK	BLOCK CITY DATUM	M.S.L.
6	2	85.0	1276.40
9-10	2	89.0	1276.40
11-14	2	88.0	1275.40
44	2	88.0	1275.40
45-50	2	87.0	1274.40
	4	86.0	1273.40
8-9	4	85.0	1272.40
16-18	4	85.0	1272.40
5-8	5	86.0	1273.40

State of Kansas) SS
Sedgwick County)

We, Baughman Company, P.A., Surveyors in aforesaid County and State do hereby certify that we have surveyed and platted "STONEBRIAR ADDITION", Wichita, Sedgwick County, Kansas and that the accompanying plat is a true and correct exhibit of the property surveyed, described as follows: The W1/2 of the W1/2 of the NE1/4 of Sec. 24, Twp. 28-S, R-1-W of the 6th P.M., Sedgwick County, Kansas.

Existing public easements and dedications being vacated by virtue of K.S.A. 12-512(b).

Baughman Company, P.A.

Michael G. Conrey 8-13-96 Surveyor

Michael G. Conrey

10-A-0-18 11/11

Know all men by these presents that we, the undersigned, have caused the land in the surveyors certificate to be platted into Lots, Blocks, Streets, and Drainage Dedications to be known as "STONEBRIAR ADDITION", Wichita, Sedgwick County, Kansas. The utility easements are hereby granted as indicated for the construction and maintenance of all public utilities. The drainage and utility easements are hereby granted as indicated for drainage purposes and for the construction and maintenance of all public utilities. The emergency access easements are hereby granted as indicated for emergency access purposes and no fences or other obstructions shall be constructed or placed on or within these easements. The wall easements are hereby granted as indicated for the construction and maintenance of a private screening wall and utility main lines and service lines shall be allowed to cross these easements. The temporary cul-de-sac easement and temporary 15 foot building setback line shall expire at such time as the street at the south end of the plat is extended south. The streets are hereby dedicated to and for the use of the public. The drainage dedications are hereby dedicated to the public for drainage purposes, open space, and public use as a recreational area to include biking and hiking. All abutters rights of access to or from 47th Street South over and across the northwest line of Lots 10 and 11, Block 1, and the north line of said Lot 10 and Lots 1, 8, and 9, Block 1, and Lot 1, Block 2 are hereby granted as indicated to the City of Wichita, Kansas. The Minimum Building Pad Elevations for the lowest opening to the structures shall be as shown on the face of the plat.

Existing public easements and dedications being vacated by virtue of K.S.A. 12-512(b).

Investors Group, Inc

Paul E. Kelsey President

State of Kansas) SS
Sedgwick County)

The foregoing instrument acknowledged before me, this 13TH day of AUGUST, 1996, by Paul E. Kelsey, President of Investors Group, Inc., on behalf of the corporation.

Philip J. Meyer Notary Public

My App't. Exp. 3/5/97

PHILIP J. MEYER
NOTARY PUBLIC
STATE OF KANSAS

We, the undersigned, holders of a mortgage on the above described property, do hereby consent to this plat of "STONEBRIAR ADDITION", Wichita, Sedgwick County, Kansas.

State Bank of Colwich

James D. Ashcroft Assistant Vice-President

State of Kansas) SS
Sedgwick County)

The foregoing instrument acknowledged before me, this 19TH day of AUGUST, 1996, by James D. Ashcroft, Assistant Vice-President, State Bank of Colwich, on behalf of the bank.

Philip J. Meyer Notary Public

My App't. Exp. 3/5/97

PHILIP J. MEYER
NOTARY PUBLIC
STATE OF KANSAS

This plat of "STONEBRIAR ADDITION", Wichita, Sedgwick County, Kansas has been submitted to and approved by the Wichita-Sedgwick County Metropolitan Area Planning Commission, Wichita, Kansas.

Dated this 11 day of September, 1996.

Wichita-Sedgwick County Metropolitan Area Planning Commission

Susan Osborne-Howes Chair

Marvin S. Krout Secretary

This plat approved and all dedications shown hereon accepted by the City Council of the City of Wichita, Kansas, this 17TH day of SEPTEMBER, 1996.

Bob Knight Mayor

Pat Burnett City Clerk

Entered on transfer record this 22nd day of November, 1996.

Susan E. Crockett-Spoon County Clerk

State of Kansas) SS
Sedgwick County)

This is to certify that this plat has been filed for record in the office of the Register of Deeds, this 22 day of November, 1996, at 2:00 o'clock P M; and is duly recorded.

Pat Kettler Register of Deeds
Pat Kettler by DIANA MANHEIMER Deputy

Ed Resa Deputy
Ed Resa

1569968

20.00 cl