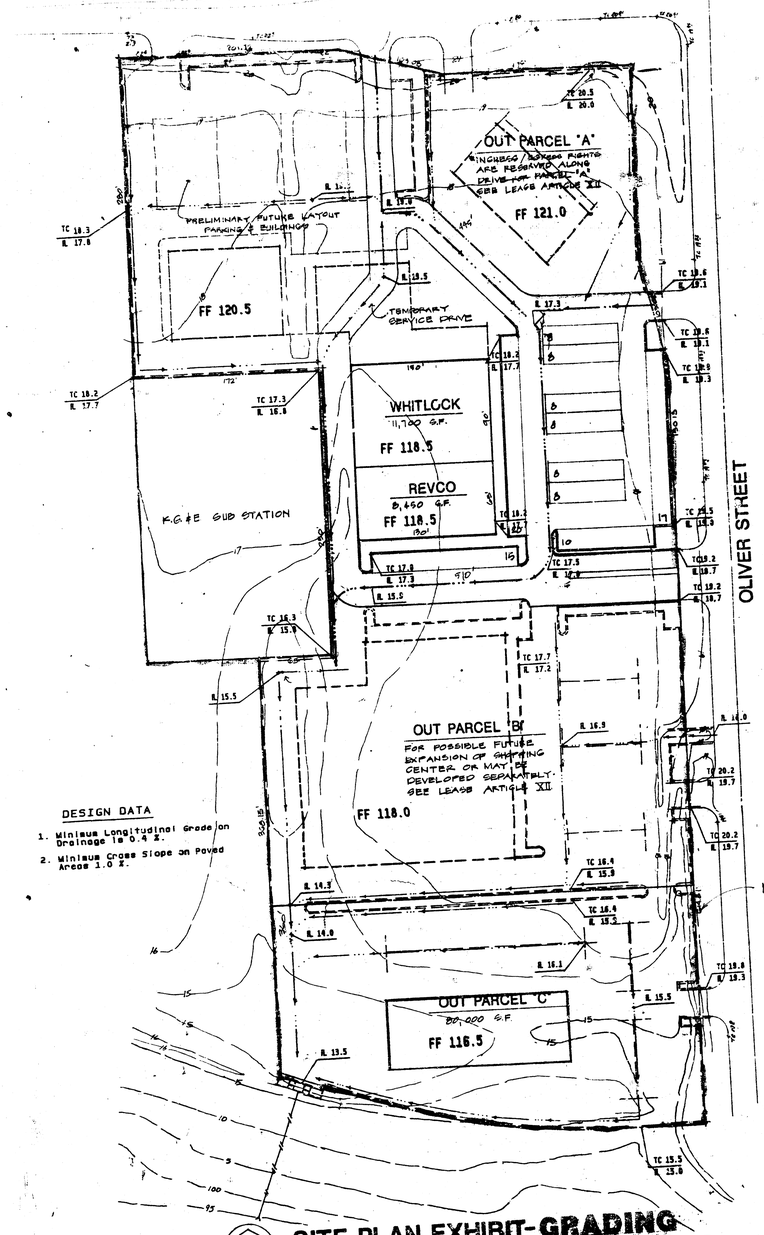


SITE PLAN EXHIBIT-GRADING

SCALE 1" = 50'

POE & ASSOCIATES OF KANSAS INC.
CONSULTING ENGINEERS
434 N. Oliver, Suite 110 ● Wichita, KS 67208 ● 316/685-4114

SPENCER GARDENS
2nd ADDITION
WICHITA, KANSAS

JEFF KINSEL ASSOCIATES

POE & ASSOCIATES OF KANSAS INC.
CONSULTING ENGINEERS
434 N. Oliver, Suite 110 ● Wichita, KS 67208 ● 316/685-4114

January 3, 1989

Ms. Vicki Huang, P.E.
Engineering, 7th Floor
455 North Main
Wichita, Kansas 67202

Re: Spencer Gardens 2nd Addition

Dear Vicki:

The enclosed plans are for the construction of an area inlet and storm sewer to drain the above referenced addition. Calculations for drainage runoff from the current site plan for this area indicate a 52 cfs peak discharge for the 100 year storm. This was the design storm used to size the inlet and pipe for this structure. Calculations for this design are enclosed.

Please review the plans and contact me if you have any questions.

Yours truly,

POE & ASSOCIATES OF KANSAS, INC.

Kenny E. Hill, P.E.
Project Manager

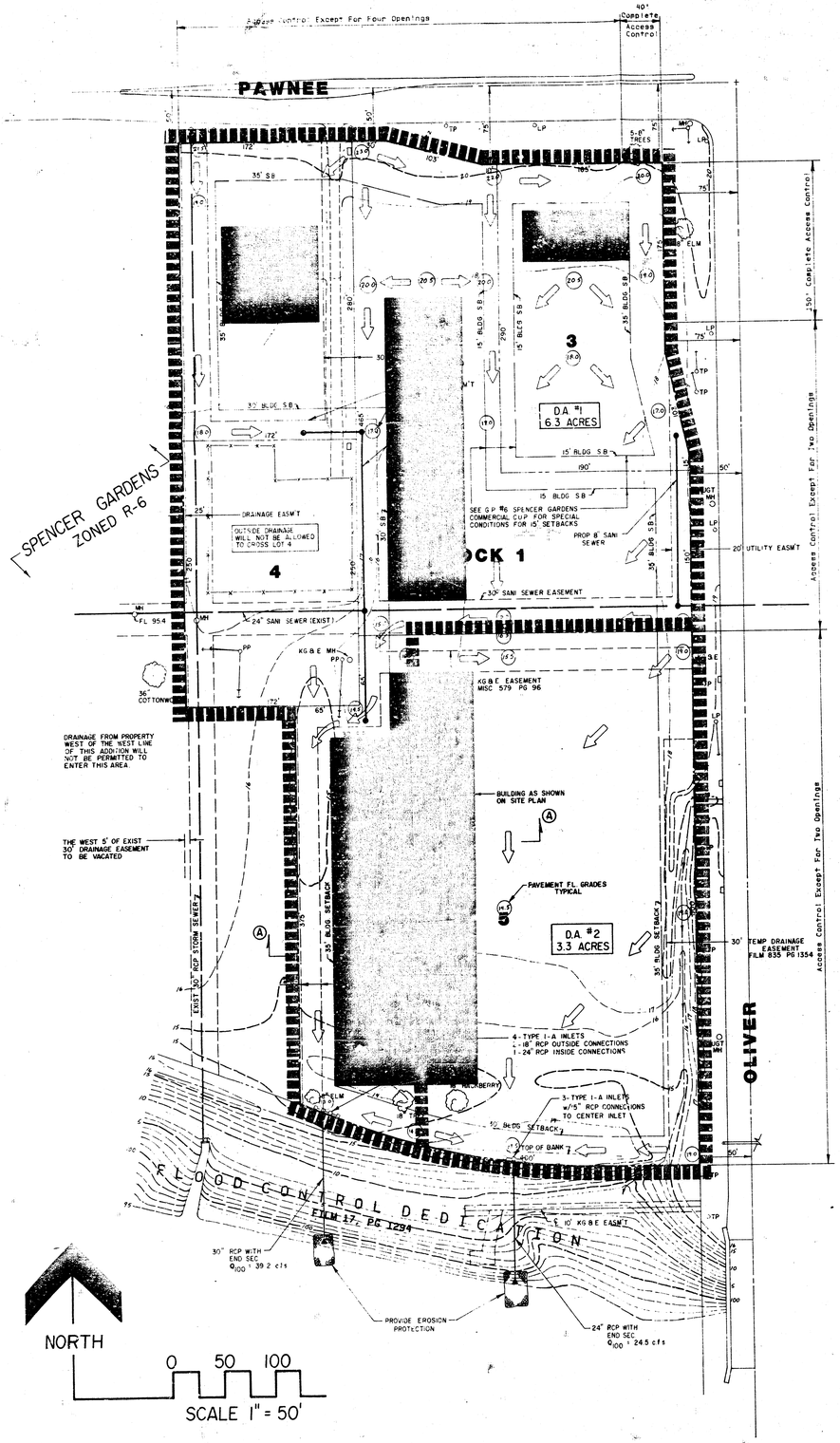
KEH:crb

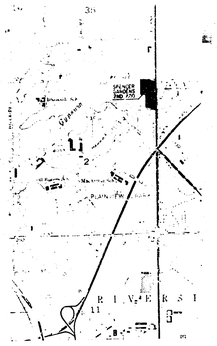
Encl.

FINAL DESIGN

PROJECT SPENCER GARDENS 2nd — TABLE 8 MINOR LOSSES AND HYDRAULIC GRADE LINE — SHEET 1 OF 1 — BY K. HILL — DATE 12-20-88

① STRUCTURE NO.	② TYPE (MH OR C.B.)	③ RIM ELEVATION H.G.L.	④ D_2/D_1	⑤ K_j	⑥ V	⑦ H_f	⑧ H_j	⑨ H_{adj}	⑩ E.G.L.	⑪ H_v	⑫ H.G.L.	⑬ INVERT ELEVATION	⑭ DEPTH
1	HOOD	111.9			10.6				119.06	1.74	*111.9	*106.00	*
90'	- 20" CMP @ 92 cfs					0.93			118.13	1.74	117.83		98.15
2	BEND				10.6		0.17		116.39	1.74	115.00		
86'	- 30" CMP @ 52 cfs					1.65			114.74	1.74	113.00		
3	INLET								113.39	1.74	111.65	108.00	





VICINITY
SCALE 1" =

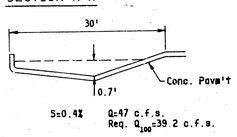
SPENCER GARDENS 2ND ADDITION
(Drainage)

7

NOTE:

1. Cross Lot Drainage Will Be Provided As Shown.
2. Refer To "Spencer Gardens Drainage Computations" Dated 5-15-87 For Detailed Calculations.

SECTION A-A



S=0.4% Q=47 c.f.s.
Req. Q_{100}=39.2 c.f.s.

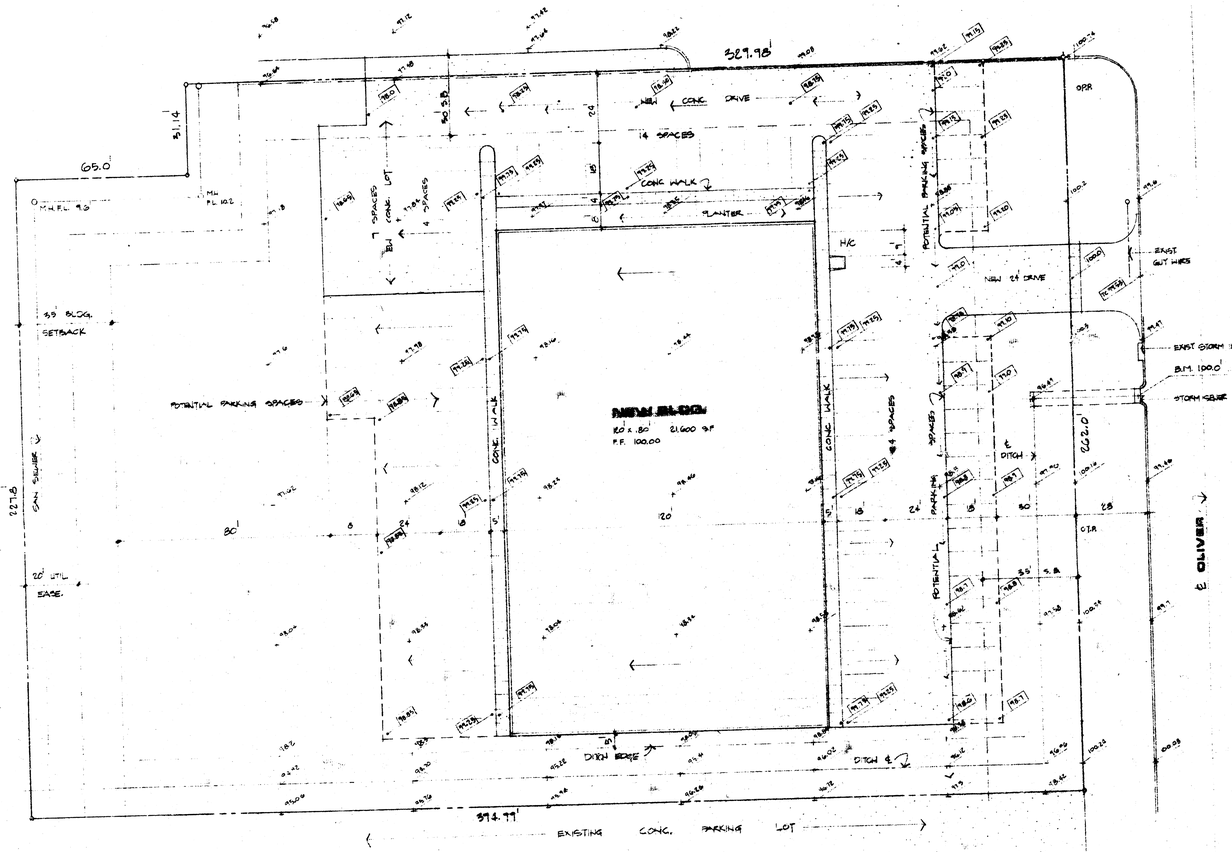
Cross lot drainage easements or agreements
Lot 1 across Lot 4, Lot 3 across Lot 2 and Lot 1 across Lot 5
SWS may be part of site development
Temporary drainage easement to be vacated?

GENERAL NOTES:

1. Topographic Survey Completed Jan. 14, 1987
2. B.M. #1 City of Wichita Std. Disc 52' N. and 42' E. of the Centerlines of Oliver and Pawnee. Elev. 121.146
3. Elevations shown are to City of Wichita Datum.
4. Platting will conform to requirements indicated on the Spencer Gardens Commercial Community Unit Plan DP-169.
5. Spencer Gardens is a replat of part of Lots 2, 4 and all of Lots 3, 5 in Spencer Gardens Addition.
6. All Lots in this Subdivision will be zoned L-C.

DRAINAGE PLAN
SPENCER GARDENS SECOND ADDITION

DATA BLOCK		
SITE	BUILDING	MECHANICAL
LEGAL DESCRIPTION	FLOOR AREA 12,600 S.F.	PLUMBING FIXTURES 2 TOILETS 2 LAVATORIES
ZONING	BUILDING TYPE B-N	FIRE HYDRANT N.E. CORN. SILVER & CORNING
ACREAGE 111,618.72 S.F.	OCCUPANCIES	ELECTRICAL
PARKING SPACES 49 SHOWN	SEPARATION	SPRINKLERS
FLOOD PLAIN	LIVE LOADS 100 # LIVE 20 #	
PAD ELEVATION F.F. 100.00	OCCUPANT LOADS	



NORTH

SITE PLAN

1" = 60'-0"

ELEVATIONS:

EXISTING 99.0 — FINISHED 99.0

SHEET SCHEDULE

SHEET	DESCRIPTION
A-1	SITE PLAN
A-2	FOUNDATION PLAN & DETAILS
A-3	FOUNDATION PLAN & DETAILS
A-4	FLOOR PLAN
A-5	FINISH SCHEDULES
A-6	ELEVATIONS
M-1	PLUMBING PLAN
M-2	HVAC PLAN
E-1	ELECTRICAL PLAN

© THIS PLAN IS THE PROPERTY OF SMITH CONSTRUCTION CO. AND IS NOT TO BE REPRODUCED UNDER ANY CIRCUMSTANCES. VIOLATION OF COPYRIGHT IS SUBJECT TO PROSECUTION.

SMITH CONSTRUCTION CO., INC.
WICHITA, KS 67213
(316) 942-7869
P.O. BOX 13213
4820 EASTWOOD

SPENCER GARDENS 2ND ADDITION
(Drainage)

THE BEDROOM

6505 N. OLIVER
WICHITA, KANSAS

REVISIONS
30 NOV 89
11 DEC 1989

7 NOV 89

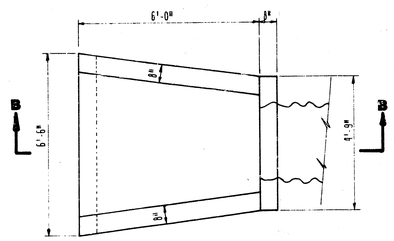
1" = 20'

D. WILLIAMS

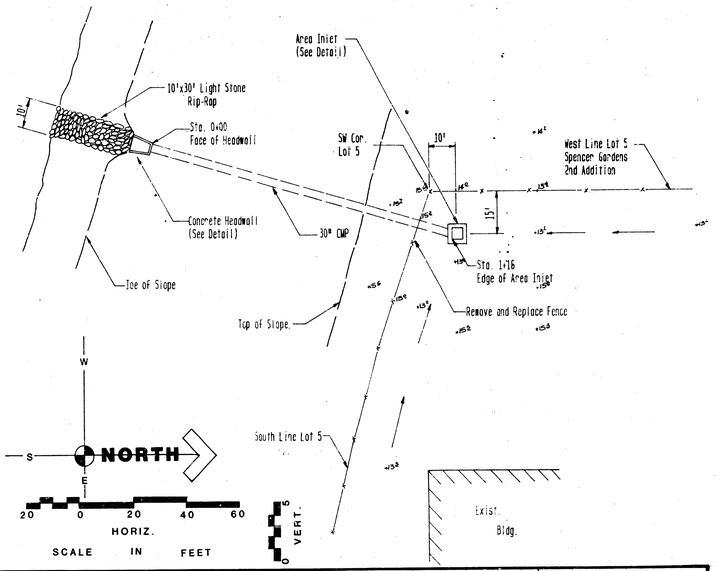
A-1

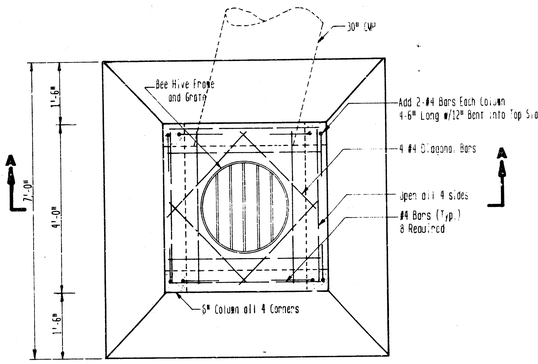
B.M. "X" cut on KG&E Manhole Ring 42'± N. and 9'± W. of SE Cor. Lot 4 Spencer Gardens 2nd Addition
Elev. 116.66 City of Wichita Datum

STATE	PROJECT NO.	FISCAL YEAR	SHEET NO.	TOTAL SHEETS

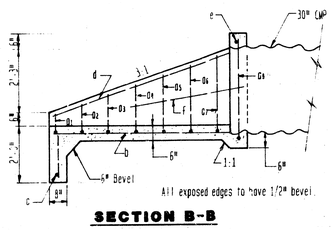


PLAN

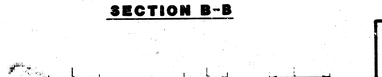




PLAN



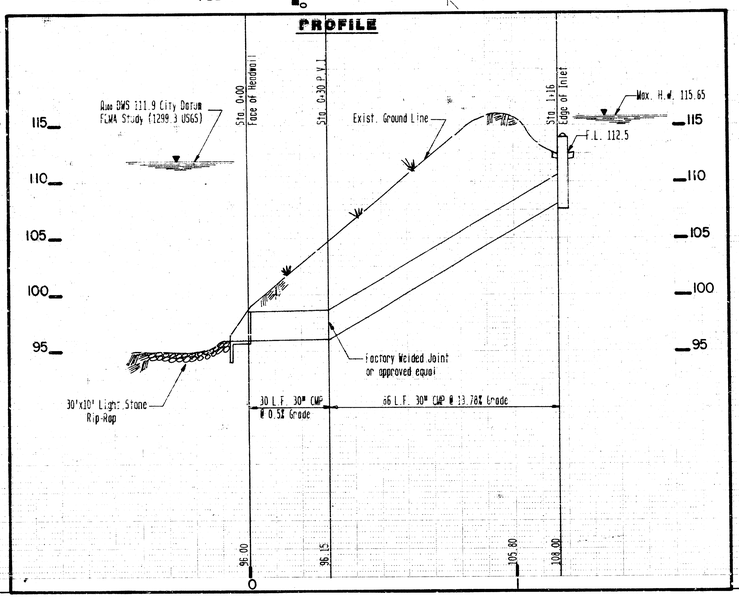
SECTION B-B

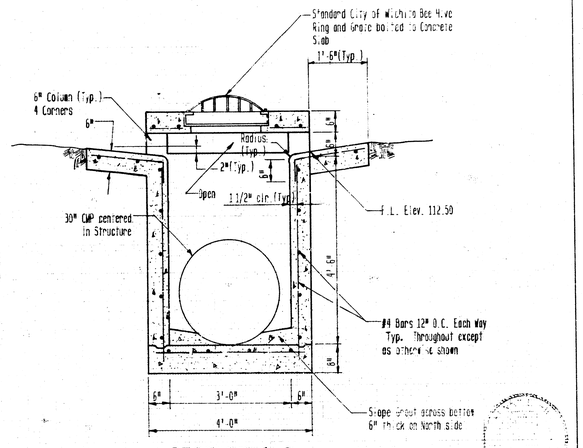


BAR	L	W	NUMBER	SIZE
a1	5'-8"	8"	1	#4
a2	5'-6"	11"	1	#4
a3	5'-3"	1'-3"	1	#4
a4	5'-0"	1'-7"	1	#4
a5	4'-8"	1'-11"	1	#4
a6	4'-6"	2'-3"	1	#4
a7	4'-3"	2'-7"	1	#4
a8	4'-1"	3'-6"	1	#4
b	7'-0"	1'-6"	7	#4
c	6'-0"	-	1	#4
d	7'-6"	-	2	#4
e	4'-5"	-	1	#4
f	4'-3"	-	2	#4

CONCRETE HEADWALL DETAILS
SCALE 1/2" = 1'-0"

PROFILE





SECTION A-A

AREA INLET
SCALE 3/4" = 1'-0"

PROFILE — SUBMITTED / PASSED / APPROVED / NOTE BOOK / NO.

POE & ASSOCIATES OF KANSAS INC. CONSULTING ENGINEERS 434 N. Oliver Suite 110 ■ Wichita, KS 67208 ■ (316) 685-4114	
ENGINEER K.H.	Spencer Gardens 2nd Addition
ENG. TECH.	To
DRAWN BY T.E.B.	CITY OF WICHITA, KANSAS
DATE DEC. 1988	
SHEET 1 OF 1	PROJECT NO. 199