BENCHMARKS:

BM #1: "+" in the top of curb inlet, located on the west side of Davin Cir. at the NE corner of Lot 18, Block H, Fairmont Addition.
Elev. = 198.18 (MSL)

BM #2: "□" on NE corner of inlet structure, located at the SW corner of the intersection of Mainsgate and 127th Street East.
Elev. = 182.33 (MSL)

BM #3: RR spike on the west face of PP on the east side of 127th Street East, adjacent to the south line of The Fairmont Addition.
Elev. = 187.25 (City Datum)

BM #4: RR spike on the east face of PP on the west side of 127th Street East, 37' N and 13' E of the NE corner of Lot 1, Block H, The Fairmont Addition.
Elev. = 189.19 (City Datum)

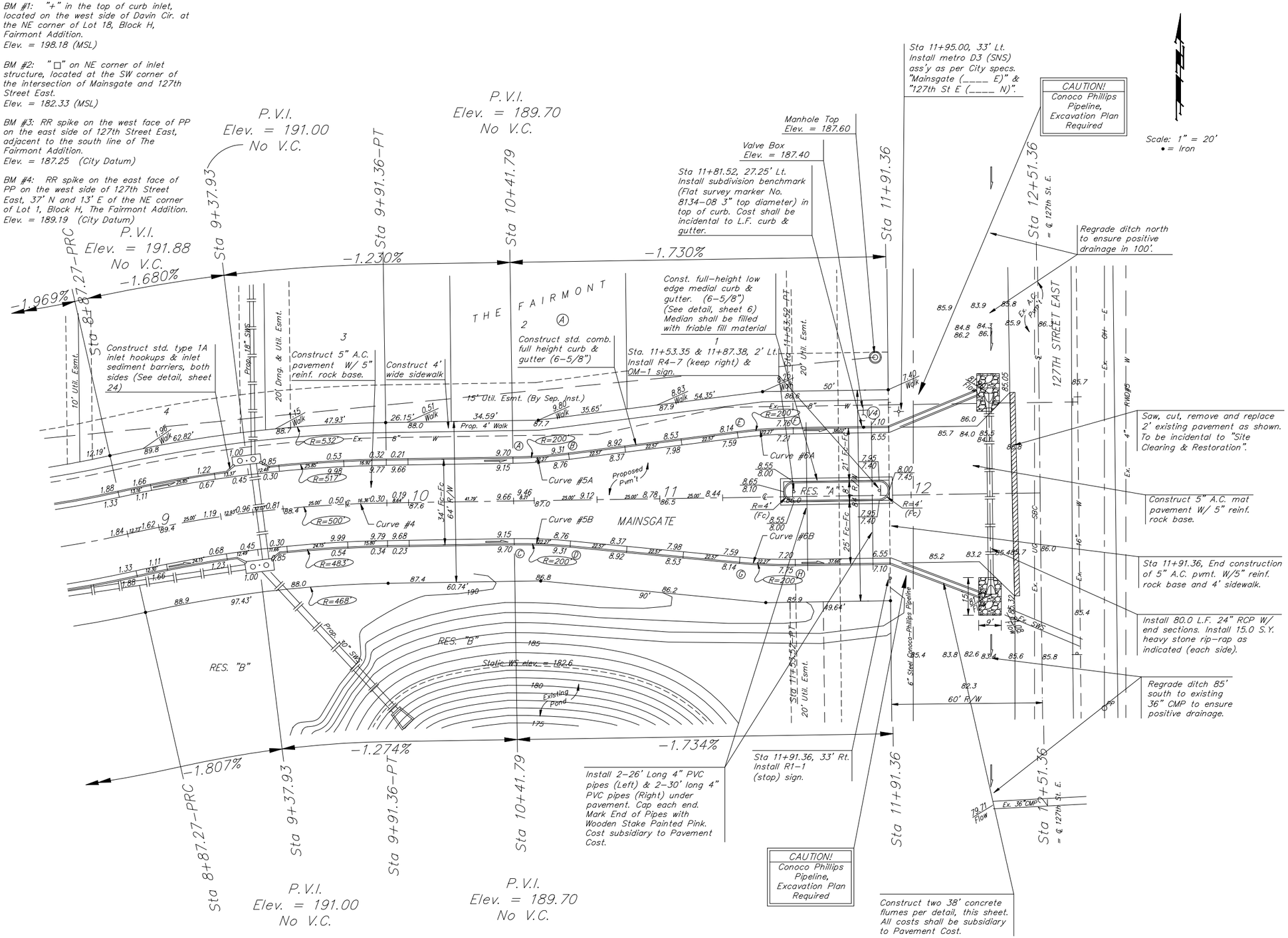

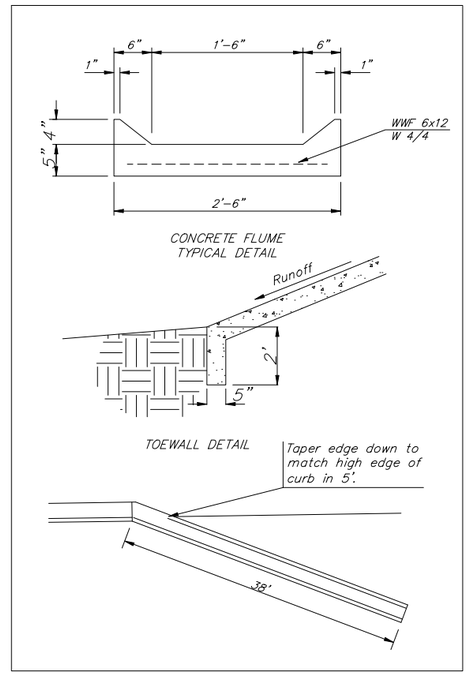

Curve #4
Curve Data Based on Centerline
Rad. = 500' Delta = 11° 55' 39" Tangent = 52.23'
Arc = 104.09' L.C. = 103.90' Def/Ft. = 3.43765 Min.

Station	Arc	FACE CHORD LENGTHS 8' Lt.	8' Rt.	Defl.	T. Defl.
8+87.27	–	–	–	0°00'00"	0°00'00"
9+00.00	12.73'	13.37'	12.09'	0°43'45"	0°43'45"
9+25.00	25.00'	26.25'	23.75'	1°25'56"	2°09'42"
9+50.00	25.00'	26.25'	23.75'	1°25'56"	3°35'38"
9+75.00	25.00'	26.25'	23.75'	1°25'56"	5°01'35"
9+91.36	16.36'	17.18'	15.54'	0°56'14"	5°57'49"

Curve #5A
Curve Data Based on Centerline
Rad. = 200' Delta = 6° 22' 46" Tangent = 11.15'
Arc = 22.27' L.C. = 22.26' Def/Ft. = 8.59377 Min.

Station	Arc	FACE CHORD LENGTHS 8' Lt.	Defl.	T. Defl.
A	–	–	0°00'00"	0°00'00"
B	22.27'	21.37'	3°11'23"	3°11'23"

Curve #5B
Curve Data Based on Centerline
Rad. = 200' Delta = 6° 22' 46" Tangent = 11.15'
Arc = 22.27' L.C. = 22.26' Def/Ft. = 8.59377 Min.

Station	Arc	FACE CHORD LENGTHS 8' Rt.	Defl.	T. Defl.
C	–	–	0°00'00"	0°00'00"
D	22.27'	21.37'	3°11'23"	3°11'23"

Curve #6A
Curve Data Based on Centerline
Rad. = 200' Delta = 6° 22' 46" Tangent = 11.15'
Arc = 22.27' L.C. = 22.26' Def/Ft. = 8.59377 Min.

Station	Arc	FACE CHORD LENGTHS 8' Lt.	Defl.	T. Defl.
E	–	–	0°00'00"	0°00'00"
F	22.27'	23.15'	3°11'23"	3°11'23"

Curve #6B
Curve Data Based on Centerline
Rad. = 200' Delta = 6° 22' 46" Tangent = 11.15'
Arc = 22.27' L.C. = 22.26' Def/Ft. = 8.59377 Min.

Station	Arc	FACE CHORD LENGTHS 8' Rt.	Defl.	T. Defl.
G	–	–	0°00'00"	0°00'00"
H	22.27'	23.15'	3°11'23"	3°11'23"

Baughman

THE FAIRMONT - PHASE IV
MAINSGATE
STA 8+87.27 TO STA 11+91.36

Baughman Company, P.A. 315 Ellis St. Wichita, KS 67211 P 316.263.7271 F 316.262.0149
ENGINEERING | SURVEYING | PLANNING | LANDSCAPE ARCHITECTURE

PROJECT NUMBER 472-84246	DESIGN ATD	DRAWN TMS
REVISIONS:	APPROVED	DATE 08/06
	SCALE Noted	
	SHEET 9 OF 32	

Fairmont\PhaseIV\Str3 06-01-E470