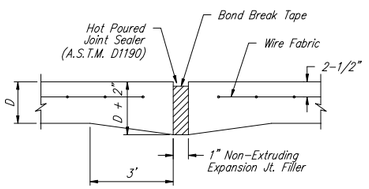

EXPANSION JOINT

NOTE: Extra Thickness to be Subsidiary to Price of Square Yards Pavement

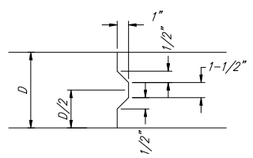

KEYWAY DETAIL

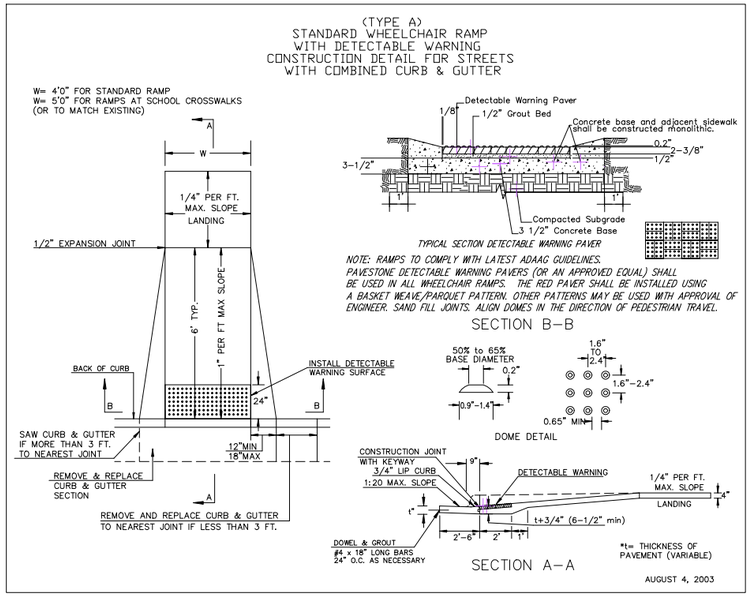

WHEELCHAIR RAMP DETAIL

Scale: 1" = 20'

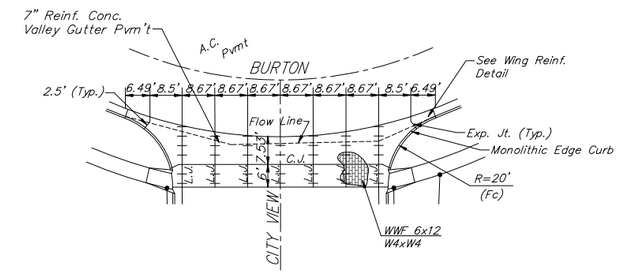

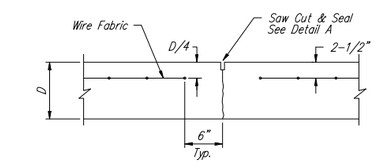

CONTRACTION JOINT DETAIL (C.J.)

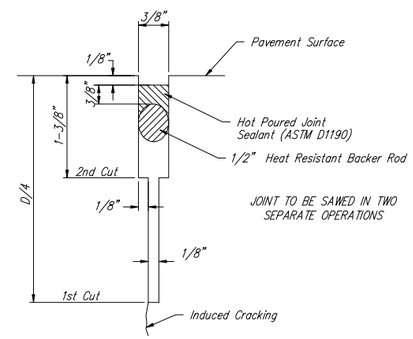

SAW JOINT DETAIL "A"

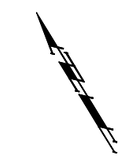

Scale: 1" = 20'

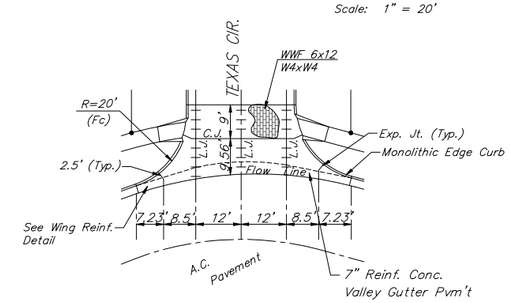

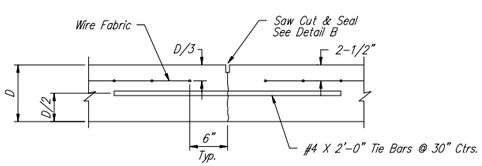

LONGITUDINAL JOINT DETAIL (L.J.)

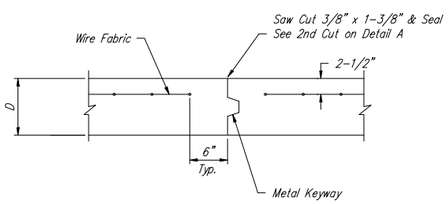

OPTIONAL CONTRACTION JOINT (CONSTRUCTION JOINT)

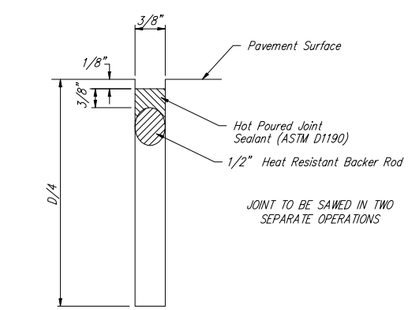

SAW JOINT DETAIL "B"

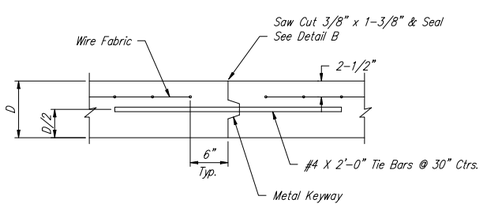

OPTIONAL LONGITUDINAL JOINT DETAIL (L.J.)
(CONSTRUCTION JOINT)

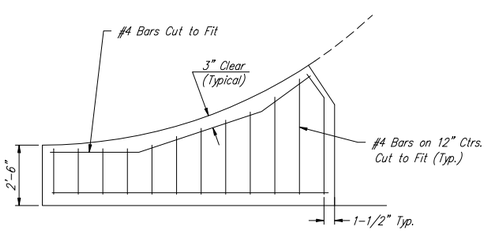

WING REINFORCING DETAIL

NOTE: 6" X 12" W4XW4 Wire Fabric Reinforcing Shall Be Placed So That The Wires With The 6" Spacing Will Run Parallel With The Longitudinal Joints.

VALLEY GUTTER DETAILS

Baughman Company, P.A. 315 Ellis St. Wichita, KS 67211 P 316-262-7271 F 316-262-0149
ENGINEERING | SURVEYING | PLANNING | LANDSCAPE ARCHITECTURE

PROJECT NUMBER 472-84060	DESIGN STAFF / DRAWN STAFF
REVISIONS:	APPROVED / DATE 06/06
	SCALE NONE
	SHEET 5 OF 32

E:\eng\Shadow Woods Addition\Phase 5\Vgdetail.dwg 06-01-E467