TYPICAL SUPERSTRUCTURE DETAILS

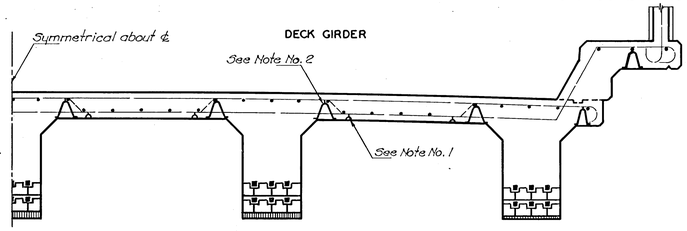



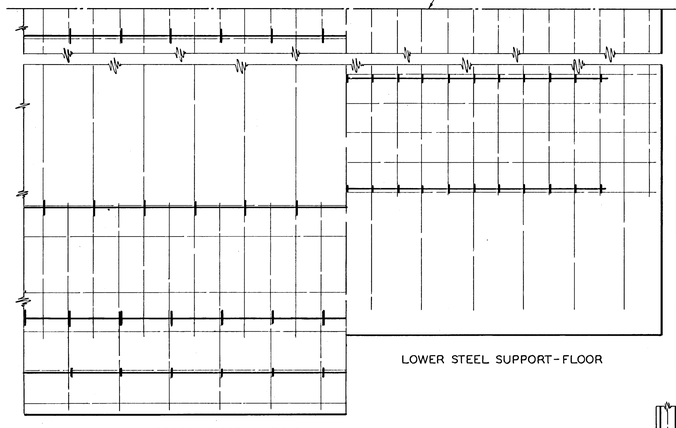

LOWER STEEL SUPPORT - FLOOR

UPPER STEEL SUPPORT - FLOOR - HUBG'D

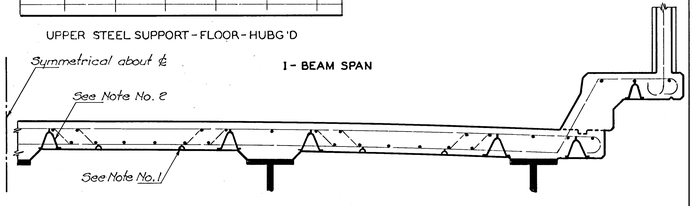

UPPER STEEL SUPPORT - FLOOR - HUBG'D

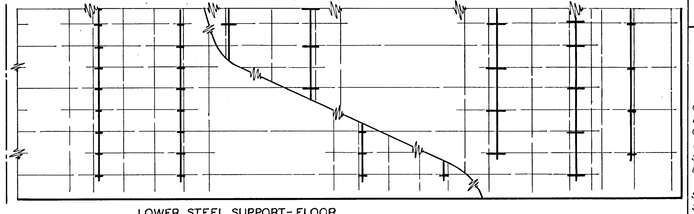

LOWER STEEL SUPPORT - FLOOR

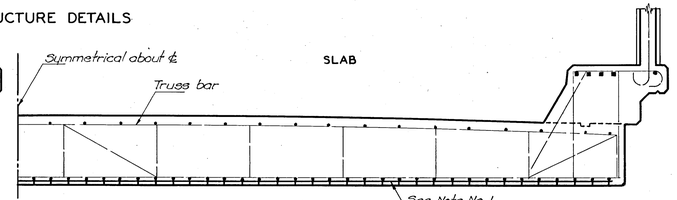

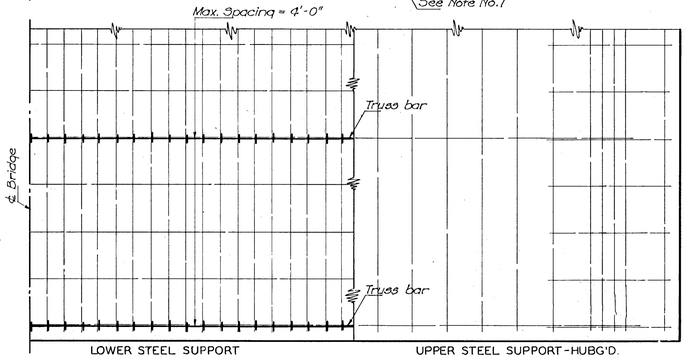

LOWER STEEL SUPPORT — UPPER STEEL SUPPORT - HUBG'D.

TYPICAL SUBSTRUCTURE DETAILS

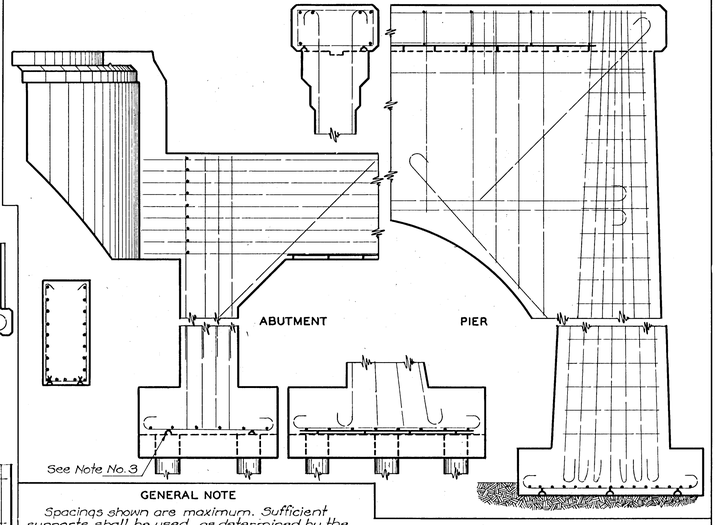

GENERAL NOTE

Spacings shown are maximum. Sufficient supports shall be used, as determined by the Engineer, to retain the reinf. steel in position. Approved designs and arrangements of Supports or Spacers other than as shown on this sheet, may be used with the permission of the Engineer. Component parts of Supports and Spacers shall be securely welded at all contact points. Legs shall be so constructed that only the ends bear upon the forms.

Wire used for Supports and Spacers shall be of sufficient size to insure stability of Reinforcing Steel at the position shown on the Plans, within the limits indicated by Notes 1 & 2. Wire supports shall be supplemented with form ties or other approved devices where necessary.

NOTE 1: The lower side of Reinforcing Steel in these locations shall be not less than one inch (1") from the surface of the concrete.

NOTE 2: The upper side of Reinforcing Steel in these locations shall be within the limits shown on the Plans.

NOTE 3: The use of Wire Supports for Reinforcing Steel in these locations is optional. Where they are not used the Steel shall be supported from the forms by means of wire ties or saddles.

BEAM BAR SPACERS & BOLSTERS

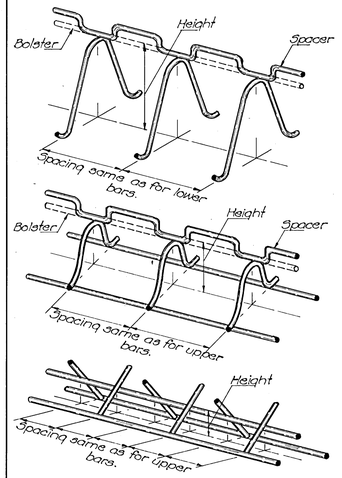

TYPICAL CULVERT DETAILS

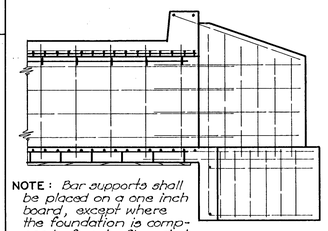

NOTE: Bar supports shall be placed on a one inch board, except where the foundation is composed of rock, firm shale or a seal course. See Note No. 3.

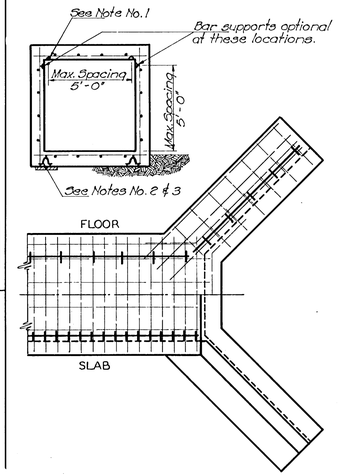

LOW SLAB BAR SPACERS & BOLSTERS

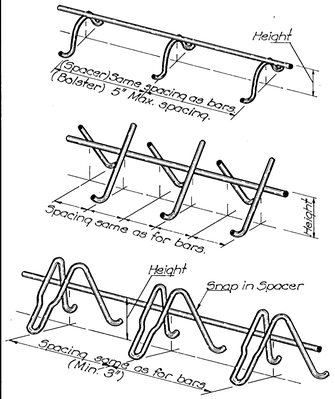

HIGH SLAB BAR SPACERS & BOLSTERS

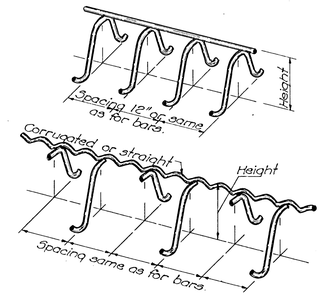

INDIVIDUAL HIGH BAR CHAIRS

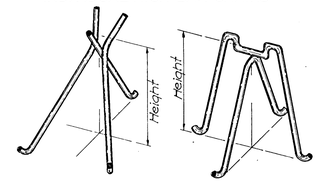

FHWA REGION NO.	STATE	PROJECT NO.	YEAR	SHEET NO.	TOTAL SHEETS
7	KANSAS	54-87-5942(2)	1980	32	32

NO.	DATE	REVISIONS	BY	APP'D

KANSAS DEPARTMENT OF TRANSPORTATION

SUPPORTS AND SPACERS FOR REINFORCING STEEL

STD. NO. 610 SCALE ..... No Scale

DESIGNED BY C.A.R. DATE 7-43 DETAILED BY W.A.B. TRACED BY W.A.B.

CHECKED BY G.T. APPROVED BY L.A. Vincent DATE 4-17-44