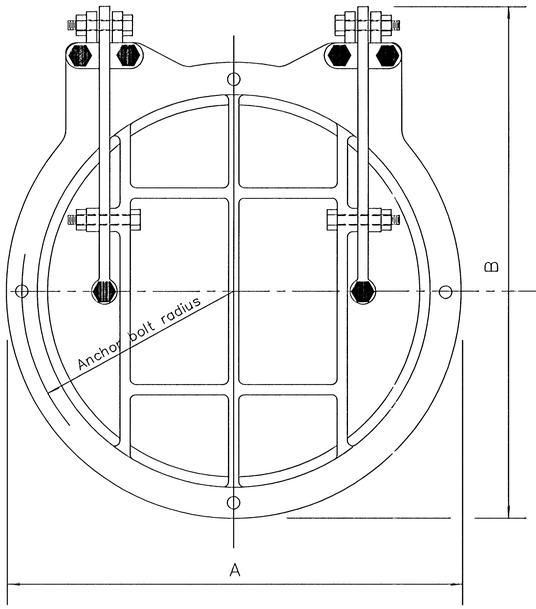

ELEVATION

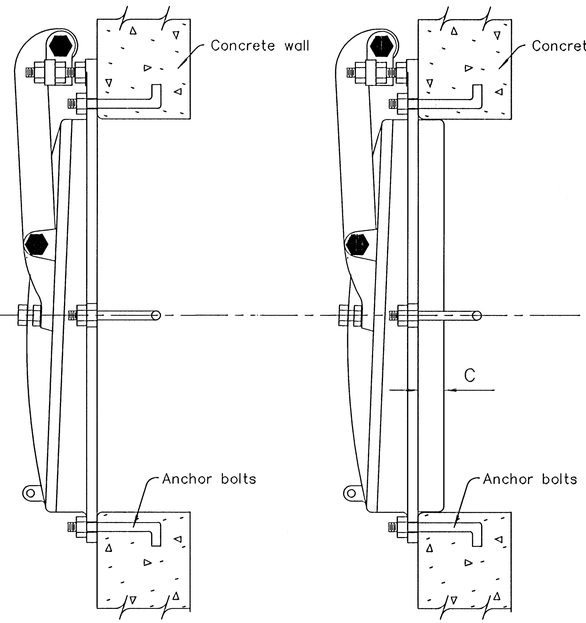

SIDE VIEW & SECTION
THRU CONCRETE WALL
FLAT BACK

SIDE VIEW & SECTION
THRU CONCRETE WALL
SPIGOT BACK

GATE SIZE DIAMETER	A	B	C
8"	13 ½"	14 ½"	1 ¼"
10"	16"	16 ¾"	1 ¼"
12"	19"	19 ¾"	1 ¼"
15"	22 ¼"	23 ⅝"	1 ¼"
18"	24 ¾"	28 ⅛"	1 ¼"
21"	28"	30 ½"	1 ¼"
24"	32"	35 ⅛"	1 ¼"
30"	37"	42"	2"
36"	44"	49 ½"	2"
42"	50 ¾"	57 ⅛"	2 ½"
48"	57"	66 ¼"	2 ½"
54"	64 ¼"	71 ⅞"	2 ½"
60"	69"	80 ½"	2 ½"
66"	80"	90"	2 ½"
72"	82"	95 ⅛"	3"
84"	100"	112 ⅛"	3"
96"	113 ¼"	125 ⅜"	3"

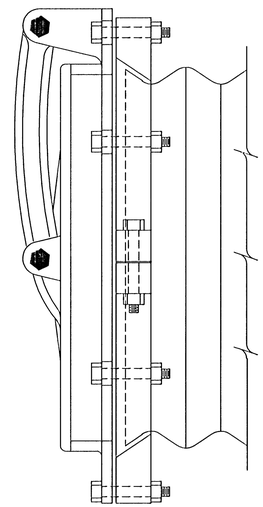

ALTERNATE CONNECTION BAND

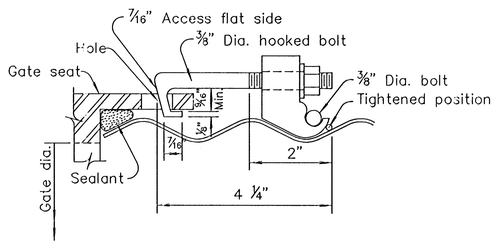

ALTERNATE CONNECTION TO
CORRUGATED STEEL PIPE

Gate sizes from 12" to 24" dia., use 4 hooked bolts.
Gate sizes from 30" to 36" dia., use 6 hooked bolts.
Gate sizes from 42" to 48" dia., use 8 hooked bolts.

GENERAL NOTES

Automatic flap gates shall conform to the dimensions and approximate weights shown in the tables. The gate shall be installed in accordance with the manufacturers' recommendations.

When no water is against the face of the gate, the flap shall seat on the finished frame. Seating surfaces of both frame and flap shall be cast iron and machined to a close fit.

The gate flap, frame and links shall be cast iron. Anchor bolts, assembly bolts and nuts shall be galvanized steel.

The gate is designed to withstand a maximum operating head of twenty (20) feet on the check side, measured from the center line of the gate to the high water level.

The illustrations, notes and table of dimensions shown are recommended for gates designed for 20 feet of operating head. Other approved makes may be substituted with the approval of the Engineer.

NO.	DATE	REVISIONS	BY	APP'D
7	12-27-93	Delete paint note	R.J.S.	J.O.B.
6	4-9-92	Alt. conn. band, ent. on CADD	R.J.S.	J.O.B.
5	7-5-90	Revised paint note	R.J.S.	J.O.B.

KANSAS DEPARTMENT OF TRANSPORTATION

AUTOMATIC FLAP GATE

RD515

FHWA APPROVAL	2-15-94	APP'D. James O. Brewer	
DESIGNED	DETAILED	QUANTITIES	TRACED Bowser
DESIGN CK.	DETAIL CK.	QUAN.CK.	TRACE CK. Seitz

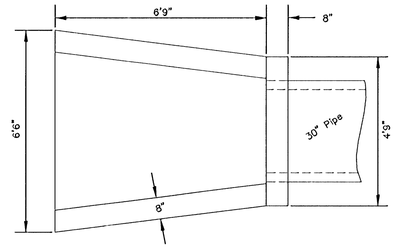

PLAN

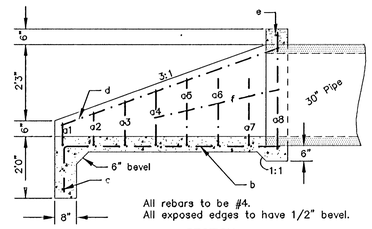

SECTION

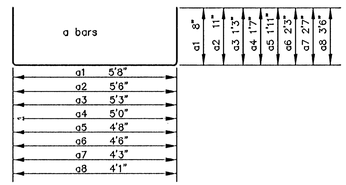

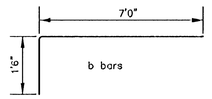

TABLE OF QUANTITIES				
BAR	NUMBER	LENGTH	SHAPE	WEIGHT
a1	1	7'0"	⌊⎵⌋	4.68
a2	1	7'4"	⌊⎵⌋	4.90
a3	1	7'9"	⌊⎵⌋	5.18
a4	1	8'2"	⌊⎵⌋	5.46
a5	1	8'6"	⌊⎵⌋	5.68
a6	1	9'0"	⌊⎵⌋	6.01
a7	1	9'5"	⌊⎵⌋	6.29
a8	1	11'1"	⌊⎵⌋	7.40
b	7	8'6"	⌊⎵⌋	35.07
c	1	6'0"	———	4.01
d	2	7'6"	———	10.02
e	1	4'5"	———	2.95
f	2	4'3"	———	5.68
Total Rebar, lbs				103.33
Concrete, C.Y.				2.01

All rebars to be #4.

HEADWALL FOR 30" PIPE

DRAINAGE HOT SPOT

HEADWALL DETAIL FOR 30" PIPE

N. WOOD LANE, WICHITA, KANSAS

CED PROJ. NO.: 20041209

CERTIFIED ENGINEERING DESIGN, P.A.

CED

810 WEST DOUGLAS, SUITE C
WICHITA, KANSAS 67203
PH.(316)262-8808 FAX.(316)262-1669

DESIGNED: HDF	SCALE: NTS	SHEET	6
DRAWN: COW,KDOT	DATE: 12/04		
CHECKED: HDF	CED FILE:06-HDWL30-FLPGTE	TOTAL	7