FHWA REGION NO.	STATE	PROJECT NO.	YEAR	SHEET NO.	TOTAL SHEETS
7	KANSAS	37 ER-164(1)	197	15	28

DAKB 574005

TABLE OF ELEVATIONS

Location	Elev. 'A'	Elev. 'B'	Elev. 'C'	Elev. 'D'	Elev. 'E'	Elev. 'F'	Elev. 'G'
Pier #2	106.60	112.61	110.60	111.03	111.04	110.69	112.72
Pier #3	106.84	112.90	110.84	111.25	111.25	110.87	112.94
Pier #4	106.84	112.94	110.87	111.25	111.25	110.84	112.90
Pier #5	106.60	112.72	110.69	111.04	111.03	110.60	112.61

Note: Allowance for 2" camber in prestressed concrete beams included for computation of elevations.

† Omit PX1 Bars at Sidewalk Beam Piers #2 & #5

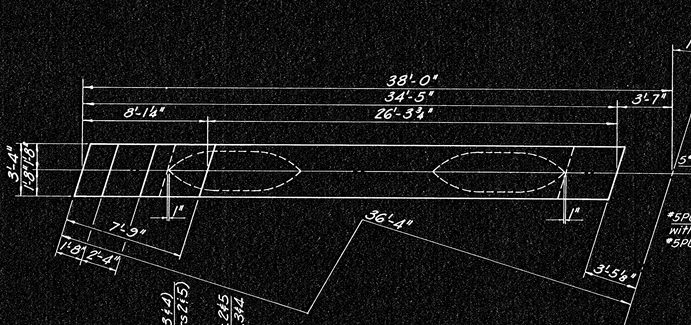

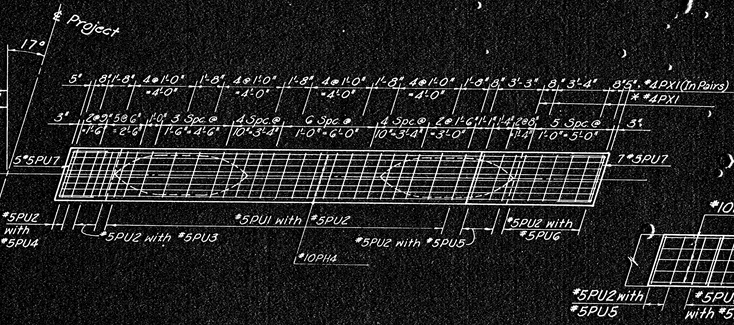

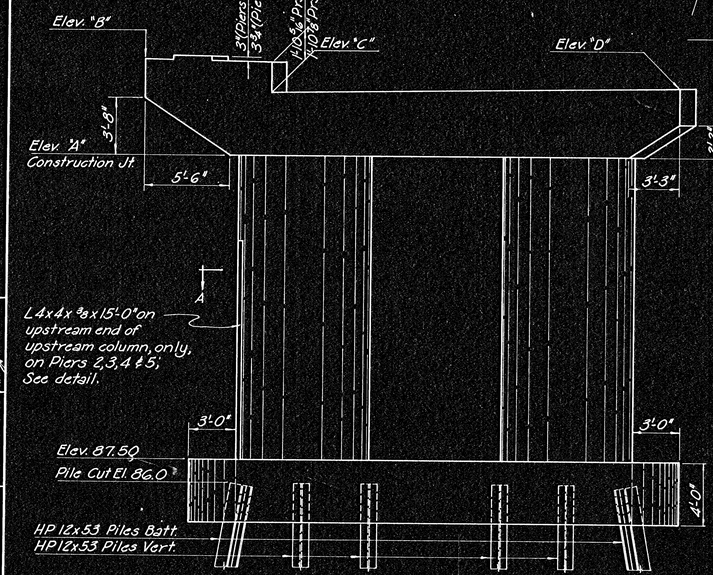

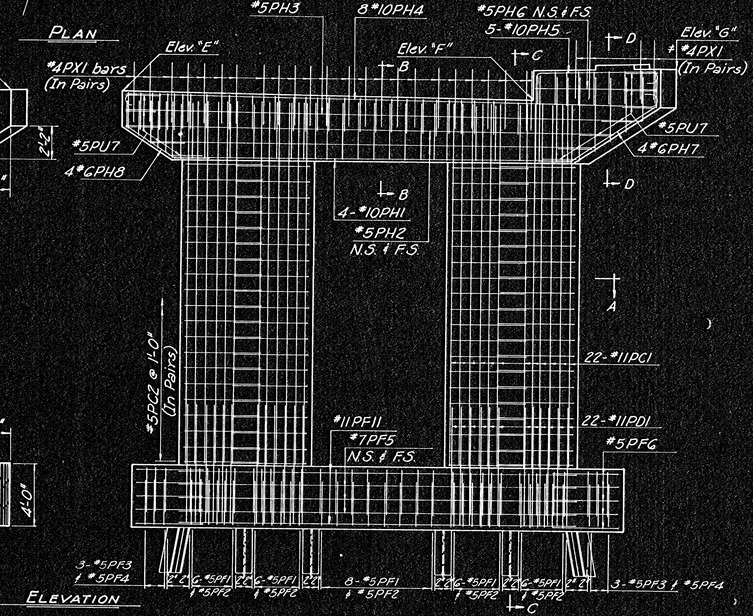

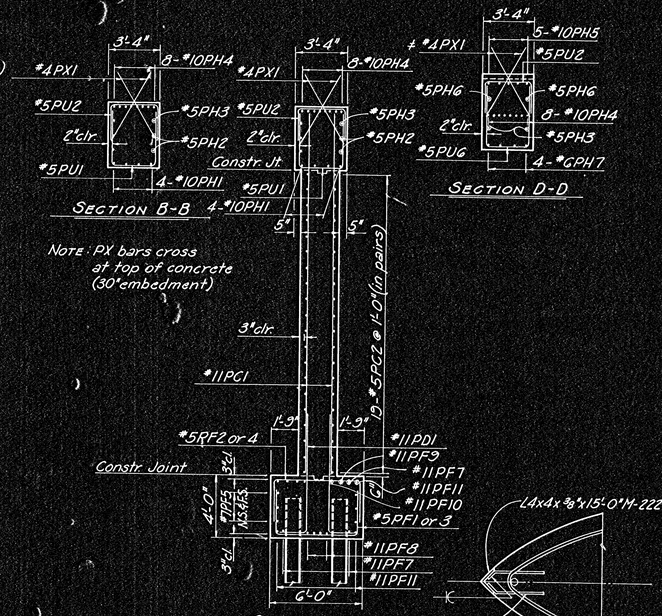



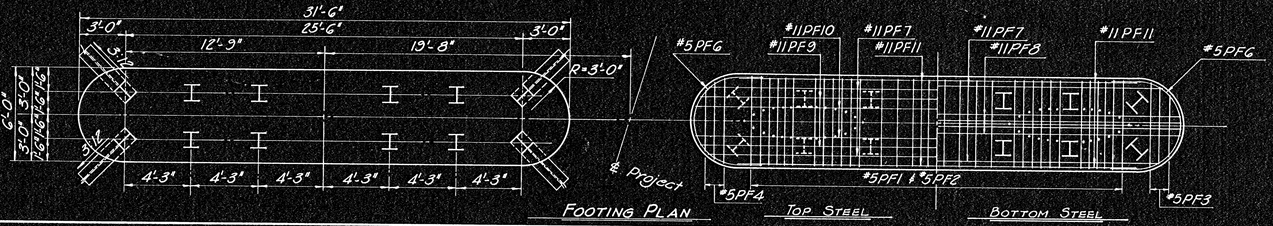

NOTES:

ALL CONCRETE SHALL BE CLASS A(AE). BEVEL ALL EXPOSED EDGES WITH A 3/4" TRIANGULAR MOLDING UNLESS OTHERWISE INDICATED.

ALL DIMENSIONS RELATIVE TO PLACEMENT OF REINFORCING ARE TO CENTERLINE OF BARS UNLESS OTHERWISE NOTED.

SEE SHEET 22 FOR BAR LIST AND BENDING DIAGRAMS.

DESIGN LOADING: HS20-44 A.A.S.H.T.O. SPEC. (1973 EDITION)

UNIT STRESSES: f'c = 1,200 P.S.I. CLASS A(AE)
f'c = 3,000 P.S.I. CLASS A(AE)
fs = 20,000 P.S.I. (REINF.)

DESIGN PILE LOADING: 65 TONS PER PILE IN PIERS 2, 3, 4 & 5

*STRUCTURAL STEEL; SEE GENERAL NOTES.

NOTE:
NOSE ANGLE EITHER SHALL BE M-222 STEEL, OR SHALL BE A-36, EITHER GALVANIZED OR CADMIUM PLATED AFTER FABRICATION.*

CITY OF WICHITA, KANSAS
R.W. LINN, P.E., CITY ENGINEER

FIRST STREET BRIDGE OVER THE ARKANSAS RIVER

DETAILS, PIERS 2,3,4&5

DELAMATER, FREUND & SCHERER, P.A.
CONSULTING ENGINEERS
WICHITA, KANSAS

SCALE | DATE June, 1974 | DWG. NO. 89-G-15

SURV. | ALIGN. | DES. | DR. | CKD. | TR. | MP