Notes:

1. Inlet Top Reinforcing shall be Spaced on 6" Max. Centers. Inlet Lids shall be Notched out as Indicated to Facilitate Construction of Curb.
2. b_3 Bar to be Field Bent to Clear Inlet Frame.

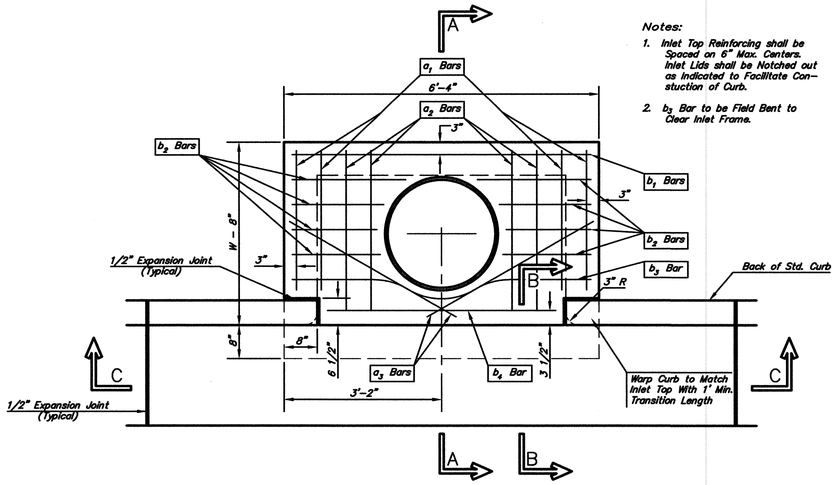

PLAN

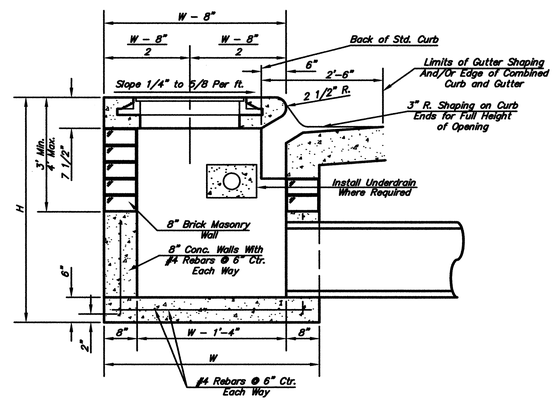

SECTION A–A

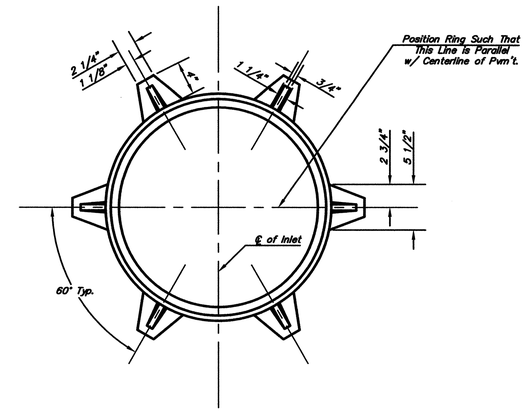

WT. = 180 lbs.

MANHOLE RING AND COVER

*See City of Wichita Standard Manhole Ring and Cover Detail Sheet for Cover Details to Be Used With Inlet Frame.

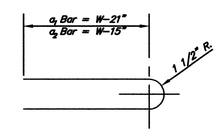

BENDING DIAGRAM

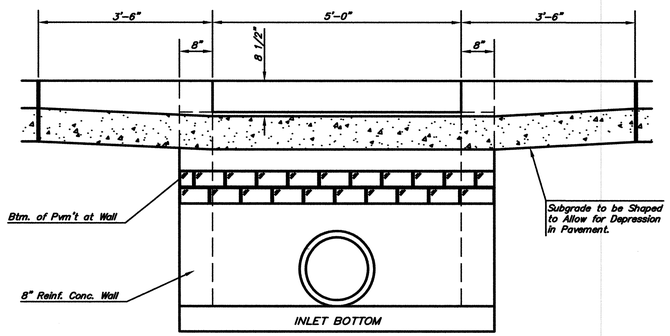

SECTION C–C

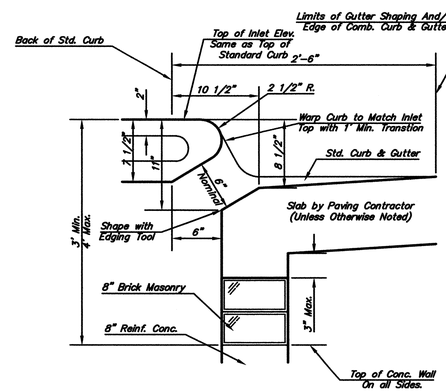

SECTION B–B

STEEL SCHEDULE

BAR		a_1	a_2	a_3	b_1 W=4'-4"	b_1 W=5'-4"	b_1 W=6'-4"	b_1 W=7'-4"	b_1 W=8'-4"	b_2	b_3	b_4	Wt. Lbs.
NUMBER		4	4	2	1	3	5	7	9	6	1	1	
SIZE		#4	#4	#4	#4	#4	#4	#4	#4	#4	#4	#6	
LENGTH	W=3'-0"	5'-7"	6'-7"	4'-0"	6'-1"	–	–	–	–	1'-9"	6'-2"	4'-8"	60±
	W=4'-0"	7'-7"	8'-7"	5'-0"	–	6'-1"	–	–	–	1'-9"	6'-2"	4'-8"	81±
	W=5'-0"	9'-7"	10'-7"	6'-0"	–	–	6'-1"	–	–	1'-9"	6'-2"	4'-8"	101±
	W=6'-0"	11'-7"	12'-7"	7'-0"	–	–	–	6'-1"	–	1'-9"	6'-2"	4'-8"	121±
	W=7'-0"	13'-7"	14'-7"	8'-0"	–	–	–	–	6'-1"	1'-9"	6'-2"	4'-8"	141±

Note: a_3 Bars to be Placed Approx. 2" Below Top of Inlet Cover.

STANDARD CURB INLET PRECAST TOPS			
W	PRE-CAST TOP SIZE	PIPE SIZE	CU. YD. CONC.
3'-0"	3'-8" 6'-4" 7 1/2"	21" & SMALLER	0.38±
4'-0"	4'-8" 6'-4" 7 1/2"	24" & 30"	0.51±
5'-0"	5'-8" 6'-4" 7 1/2"	36" & 42"	0.64±
6'-0"	6'-8" 6'-4" 7 1/2"	48" & 54"	0.77±
7'-0"	7'-8" 6'-4" 7 1/2"	60" & 66"	0.90±

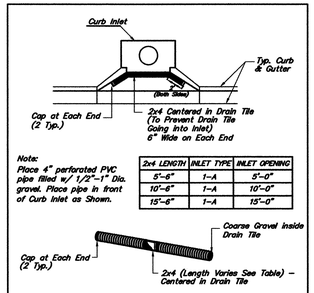

2x4 LENGTH	INLET TYPE	INLET OPENING
5'-6"	1-A	5'-0"
10'-6"	1-A	10'-0"
15'-6"	1-A	15'-0"

CURB INLET PROTECTION

4" Perforated Pipe w/ Gravel

REV. 5-9-06

CITY OF WICHITA PUBLIC WORKS ENGINEERING

STANDARD TYPE 1
CURB INLET
5'-0" OPENING

CITY ENGINEER
JAMES L. ARMOUR, P.E., L.S.
ACTING

PROJECT NUMBER	OCA NUMBER	DATE
472-84437	766159	MM/YY

CITY ENGINEER'S OFFICE
CITY HALL – SEVENTH FLOOR
455 NORTH MAIN STREET
WICHITA, KANSAS 67202-1620
(316) 268-4501
(316) 268-4114 FAX

DESIGN: ABC
DRAWN: DEF
SHEET

Crafton Tull Sparks
8200 E. 34th Street North, Bldg. 1600
Suite 1603, Wichita, KS 67226
316.634.6776 FAX: 316.634.6777
www.craftontullsparks.com
architecture | engineering

ALTA STREET DESIGN, 350' WEST OF ELLIS TO HYDRAULIC
WICHITA, KANSAS
C.O.W. PROJ. NO.: 472 84437

ISSUED FOR CONSTRUCTION

Revision

TYPE 1 CURB INLET DETAIL

Drawn by	Job Number
CKW	073009-00
Checked by	Contact Person
	J. MOHLER
Date	Sheet Number
1/02/08	C5.06

DRAWING FILE NAME AND LOCATION: G:\073009-00\ENG\DWG\Type 1 Curb Inlet Detail.dwg
LAST SAVED BY CW3002 , 11/28/2007 3:51:07 PM
PLOTTED BY CHRIS WINKLER (ONLY VALID ON HARD COPY)
, LAYOUT TAB: TYPE 1 CURB INLET DETAIL

© 2007 Crafton, Tull, Sparks & Associates, Inc.