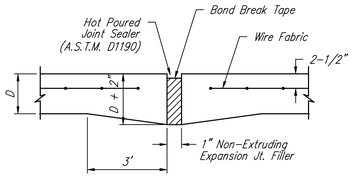

EXPANSION JOINT

NOTE: Extra Thickness to be Subsidiary to Price of Square Yards Pavement

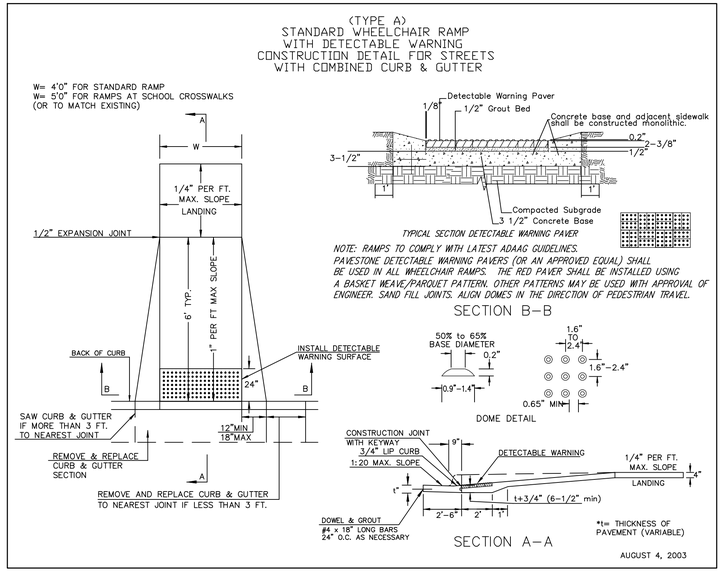

WHEELCHAIR RAMP DETAIL

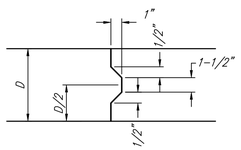

KEYWAY DETAIL

CONTRACTION JOINT DETAIL (C.J.)

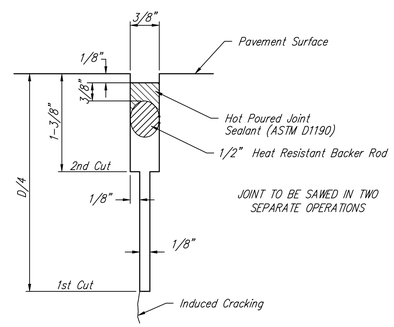

SAW JOINT DETAIL "A"

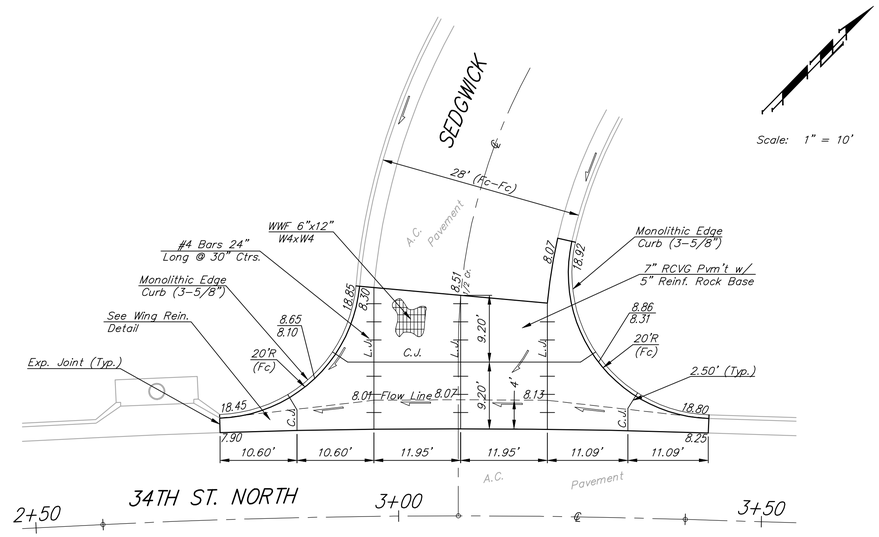

VALLEY GUTTER DETAIL

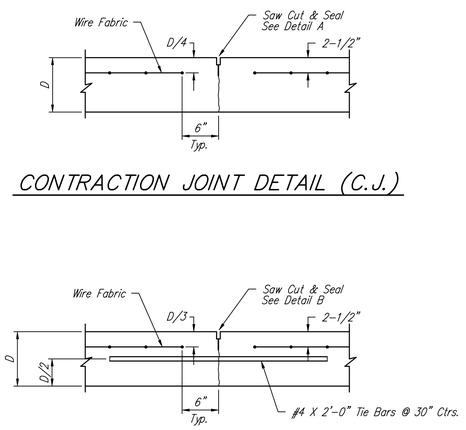

LONGITUDINAL JOINT DETAIL (L.J.)

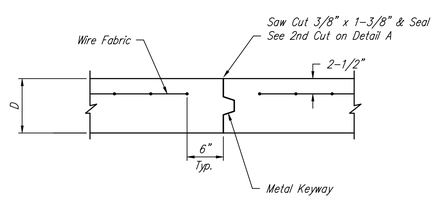

OPTIONAL CONTRACTION JOINT (CONSTRUCTION JOINT)

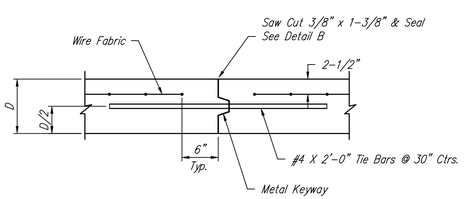

OPTIONAL LONGITUDINAL JOINT DETAIL (L.J.)
(CONSTRUCTION JOINT)

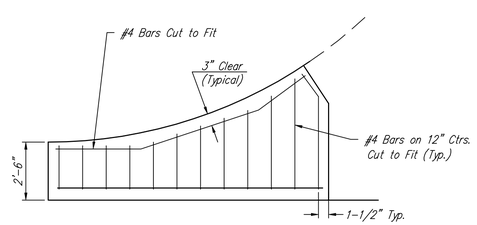

WING REINFORCING DETAIL

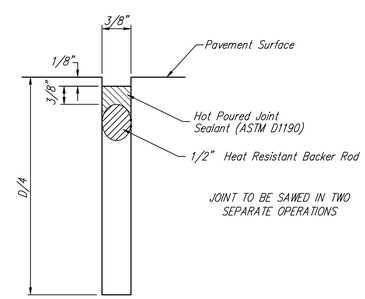

SAW JOINT DETAIL "B"

NOTE: 6" X 12" W4XW4 Wire Fabric Reinforcing Shall Be Placed So That The Wires With The 6" Spacing Will Run Parallel With The Longitudinal Joints.

Baughman

Mesa Verde Addition - Phase I

Miscellaneous Details

Baughman Company, P.A. 315 Ellis St. Wichita, KS 67211 P 316262-7271 F 316262-0149
ENGINEERING | SURVEYING | PLANNING | LANDSCAPE ARCHITECTURE

PROJECT NUMBER 472-84481	DESIGN STAFF / DRAWN STAFF
REVISIONS:	APPROVED / DATE 2/20/08
	SCALE NONE
	SHEET 4 OF 18

Mesa Verde Addition\Phase 1\Vgdetail.dwg 07-11-E995