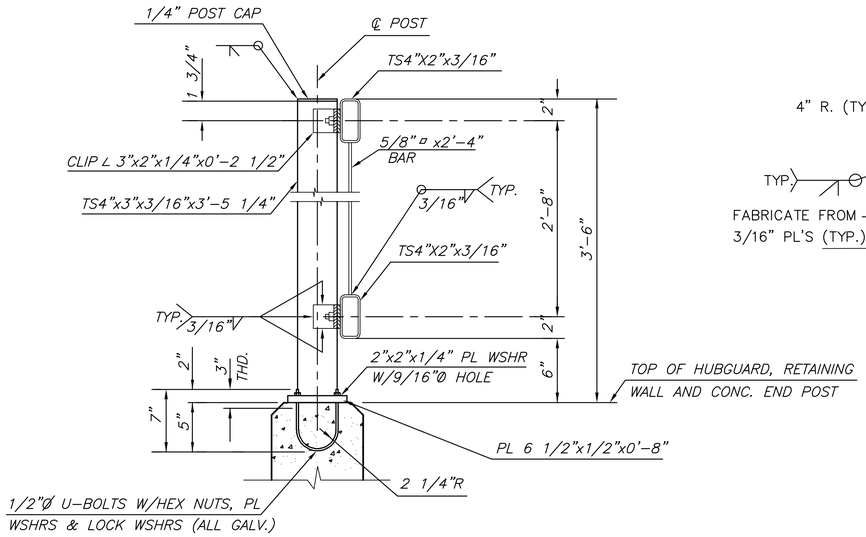

TYPICAL RAIL SECTION
NO SCALE

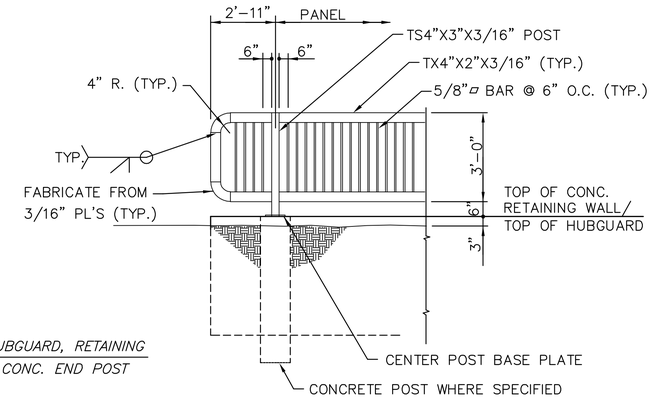

TYPICAL HANDRAIL PANEL DETAIL
(NOT TO SCALE)

HANDRAIL NOTES:

1. The rail members shall conform to ASTM Designation A36 or equivalent.

2. Rail shall be fabricated in lengths to include a minimum of two and a maximum of three panels. Posts shall be set vertical. Shims may be used between concrete and base plates of posts.

3. All parts of Handrail shall be painted. The primer coat shall conform to the inorganic Zinc System. Surface preparation shall be in accordance with that for structural steel. The finish coat shall be in accordance with waterborne acrylic finish coat. All materials, equipment and labor necessary for the installation of the Handrail shall be subsidiary to the bid item "RCB Handrail".

4. Paint shall be Tnemec semi-gloss Black or an equivalent approved by MKEC. Supply color chart to MKEC for approval prior to painting of handrail.

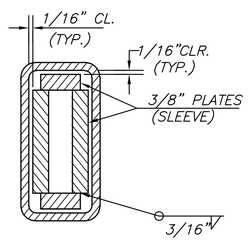

SECTION B-B
NO SCALE

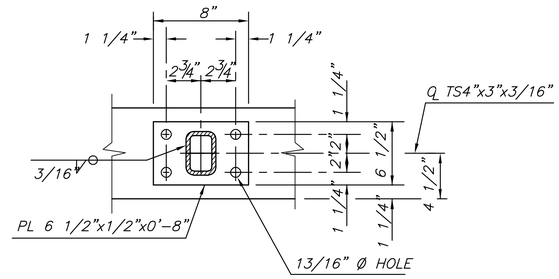

BASE PLATE DETAIL
NO SCALE

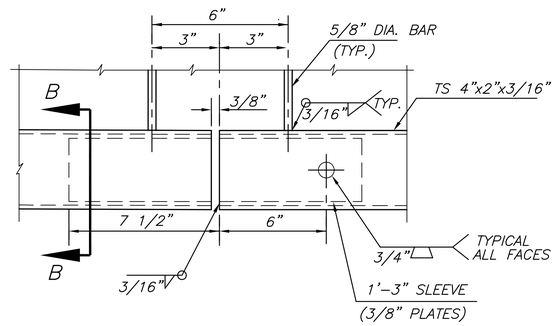

SLEEVE DETAIL
NO SCALE
(BOTTOM RAIL SHOWN, TOP RAIL SIMILAR)

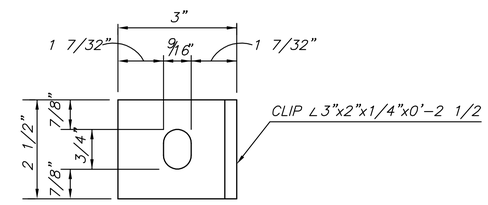

CLIP DETAIL
NO SCALE

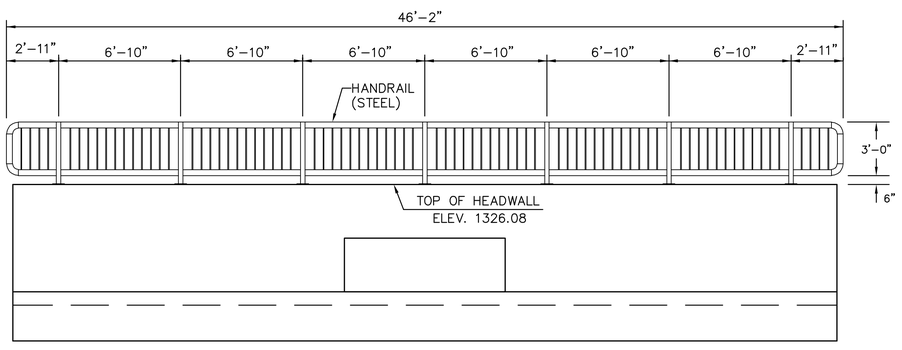

HANDRAIL ELEVATION – HEADWALL
(2 REQUIRED)

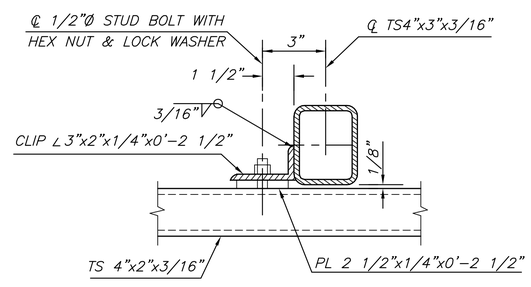

RAIL CONNECTION DETAIL
NO SCALE

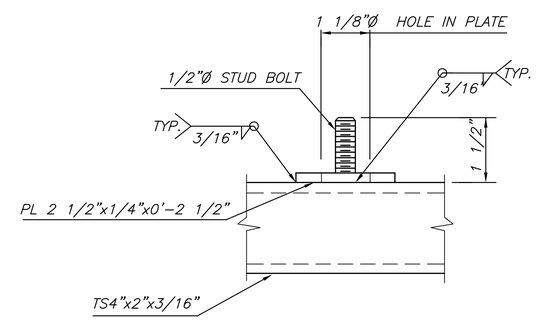

STUD BOLT DETAIL
NO SCALE

MKEC ENGINEERING CONSULTANTS, INC.
411 N. WEBB ROAD
WICHITA, KS. 67206
316-684-9600

STORM WATER SEWER
COUNTRY HOLLOW ADDITION
PHASE 2

HANDRAIL DETAILS
SHEET TITLE

468-84114
PROJECT NUMBER

ABC
DESIGN BY
ABC
DRAWN BY
ABC
CHECKED BY

ISSUED
February 2008
REVISED

SHEET NO.
12 of 20

J:\CIVIL\04429\DWG\SWS\PHASE 2\4429_RCB3.DWG

PLOTTED: Tuesday, February 19, 2008 @ 04:43PM