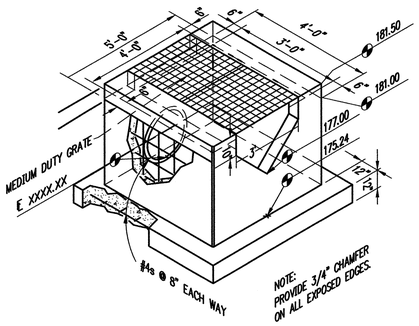

POND OUTLET WEIR DETAIL
NTS

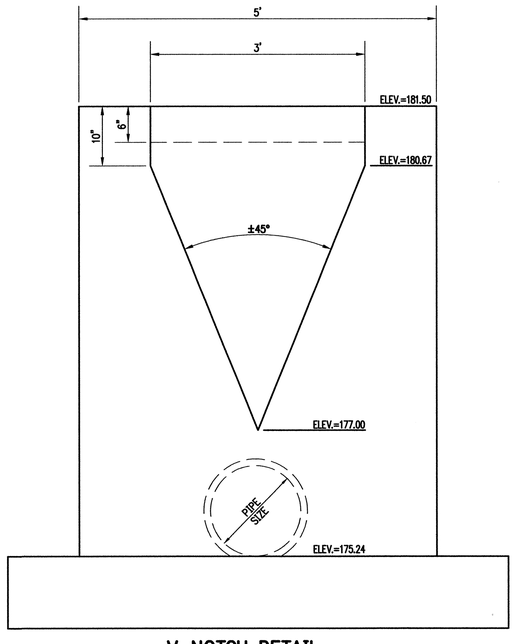

V-NOTCH DETAIL
NTS

GENERAL NOTES:
1. ALL EXPOSED CORNERS TO HAVE 3/4" CHAMFER
2. ALL #4 & #5 REINFORCING BARS TO HAVE 1-1/2" COVER, LARGER SIZES TO HAVE 2" COVER.
3. SEE GRADING AND DRAINAGE PLAN FOR PIPE SIZES, LOCATIONS, AND FLOW LINES.
4. PIPES SHALL CONNECT TO THE ENDS OR SIDES OF THE INLET. CONNECTION SHALL NOT BE MADE AT CORNERS OF BOX.
5. ALL REINFORCING BARS TO BE GRADE 60.

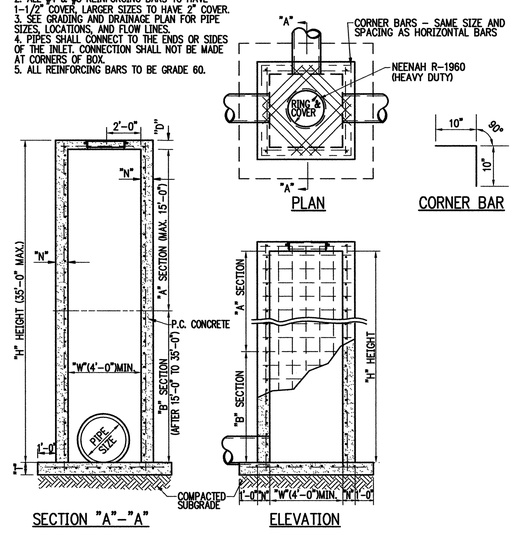

JUNCTION BOX
NTS

Crafton Tull Sparks
8200 E. 34th Street North, Bldg. 1600
Suite 1603, Wichita, KS 67226
316.634.6776 FAX: 316.634.6777
www.craftontullsparks.com
architecture | engineering

JASON C. MOHLER
LICENSED
18722
KANSAS
PROFESSIONAL ENGINEER
10/23/07

WEBB ROAD BUSINESS PARK
ORME STREET & WILDCAT LANE
WICHITA, KANSAS
ISSUED FOR CONSTRUCTION

Revision

STORM WATER SEWER DETAILS

Drawn by	Job Number
CKW	073006-00
Checked by	Contact Person
	J. MOHLER
Date	Sheet Number
10/16/07	C25.01

DRAWING FILE NAME AND LOCATION: G:\073006-00\ENG\DWG\detail sheet.dwg
LAST SAVED BY: CW3002 , 9/20/2007 10:24:18 AM
PLOTTED BY: CHRIS WINKLER (ONLY VALID ON HARD COPY)
© 2007 Crafton, Tull, Sparks & Associates, Inc.
LAYOUT TAB: C25.01