B.M. #91 1-35 at. Abut. Chiseled "X" E. end of S.E. wingwall on bridge over canal at 3rd St. El: 1300.15 Sea level. City Datum 1909
B.M. 1/4 SW Cor. Sec. 19-27-1E
B.M. 1/4 S.W. Corner first conc. mon. No. 2009 E. 2nd St. House N.E. 2nd & Ash.

DENOTES - proposed Storm Sewer INLETS

N

Ramp "E"

Proposed I-35 W Storm sewer and alignment.

Road "A"

MINNESOTA AVE. (Frwy.)

R of W = 30'

PIATT AVE

R of W = 50'

ASH ST.

2ND STREET.

STA 0+00 Remove existing M.H. const concrete collar around juncture between old and new pipe.

STA 0+36 ALTERNATE No. 1, 3, and 4 const plastic lined reinf conc. M.H. ALTERNATE No. 2, const std brick M.H. Type B. (5' dia.).

STA 0+85 Remove exist. M.H. ALTERNATE No. 3 and 4 const concrete collar around juncture between old and new pipe.

STA 2+00 ALTERNATE No. 1 and 2 remove exist. M.H. — ALTERNATE No. 3 and 4 manhole to remain in place. ALT. No. 1 const plastic lined reinf conc M.H. — ALT. No. 2 const std brick M.H. Type B. (5' dia).

Remove exist 36" pipe between sta 0+00 and 0+79.

PROPOSED 30" R.C.P. STORM SEWER

EXISTING 36" SANITARY

PROPOSED 15" R.C.P. (Storm sewer).

EXISTING 8" SANITARY SEWER

"FLOW LINE GRADES" Flow Line grades shown are for re-construction of alternates 1 & 2.

PLAN SCALE 1"=30'
PROFILE 1"=20' HORZ
1"=4' VERT

DONALD E. SCHNEIDER LICENSED 6311 KANSAS PROFESSIONAL ENGINEER

RANDALL S. [illegible] LICENSED 3863 KANSAS PROFESSIONAL ENGINEER

STA 0+00 Remove exist M.H. const concrete collar around juncture between old and new pipe.

STA 0+36 ALTERNATE No. 1, 3, and 4 const plastic lined reinf conc. M.H. ALTERNATE No. 2, const std brick M.H. Type B. (5' dia.).

STA 0+85 Remove exist M.H. ALTERNATE No. 3 and 4 const concrete collar around juncture between old and new pipe.

STA 2+00 ALTERNATE No. 1 and 2 remove exist M.H. ALT. No. 1 const plastic lined reinf conc M.H. ALT. No. 2 const std brick M.H. Type B. (5' dia.). ALTERNATE No. 3 and 4 manhole to remain in place. Remove exist M.H.

existing 36" San. Sewer

existing 36" San Sewer

proposed 15" S.W.S.

ALT No. 3 and 4 83.3 L.F. 36" R.C.P. "Unlined"

36 L.F. 36" R.C.P. Plastic Lined ALT No. 1 & 2

- 0.10% ALT 1+2

ALT No. 1 Remove exist. pipe and Install 316 L.F. 30" R.C.P. (Plastic Lined)
ALT No. 2 Remove exist. pipe and Install 316 L.F. 27" W.C.P. (concrete encased)
ALT No. 3 Install 316 L.F. 28" HOBAS-LIKE lining and grout in place.
ALT No. 4 Install 316 L.F. 27" FLEXTRAN lining and grout in place.

Alteration, Repair, Reconstruction of a portion of SANITARY SEWER No. 12 lying in Second Street from Grove to Piatt.
CITY of WICHITA, KANSAS
R.W. LINN City Engineer
Date APRIL 1973 Proj No. DBKM573009

Sheet 1 of 4

B.M.=Ⓜ S.W. Corner first concrete slop house # 2222 East 42ND STREET.
B.M.=Ⓜ N.E. Corner first concrete slop House # 247 N. SPRUCE

ASH ST.
MADISON AVE
SPRUCE ST.
Alley
EXISTING 6" SANITARY SEWER
STA 5+37.5 ALTERNATE No. 1 and 2 Remove exist M.H. — ALT No. 3 and 4 exist M.H. to remain in place. — ALT No. 1 const plastic lined reinf conc M.H. — ALT No. 2 const std brick M.H. TYPE 'B' (5' dia).
STA 8+61.7 ALTERNATE No. 1 and 2 Remove exist M.H. — ALT No. 3 and 4 exist M.H. to remain in place. — ALT No. 1 const plastic lined reinf conc M.H. — ALT No. 2 const std brick M.H. TYPE 'B' (5' dia).
proposed 30" STORM WATER SEWER.
R of W = 30'
EXISTING 36" SANITARY
proposed 15" R.C.P. (storm water)
AREA 243
Bell M.H.
Bell Cable
Code Pk.
Trees to Remain
Abandoned Bell Cable
Sidewalk
Curb & Gutter
Asph.
Conc.
Brick
Gravel
Fence
Shrubs
Grass
Hydrant
Light Pole
Sign
Manhole
Catch Basin
Gas Valve
Water Valve
Gas Line
Water Line
Sanitary Line
Storm Line
Telephone Line
Electric Line
Overhead Wires
Guy Wire
Tree
Bush
Hedge
Fence
Retaining Wall
Steps
Ramp
Curb Cut
Driveway
Parking Meter
Mail Box
Flag Pole
Fire Hydrant
Sprinkler
Gas Meter
Electric Meter
Transformer
Pole
Guy Anchor
Concrete
Asphalt
Brick
Stone
Metal
Wood
Glass
Plastic
Rubber
Paint
Concrete Block
Concrete Slab
Concrete Footing
Concrete Foundation
Concrete Wall
Concrete Floor
Concrete Roof
Concrete Steps
Concrete Ramp
Concrete Curb
Concrete Gutter
Concrete Sidewalk
Concrete Driveway
Concrete Parking Lot
Concrete Alley
Concrete Street
Concrete Bridge
Concrete Culvert
Concrete Pipe
Concrete Manhole
Concrete Catch Basin
Concrete Inlet
Concrete Outlet
Concrete Headwall
Concrete Wingwall
Concrete Apron
Concrete Slope
Concrete Paving
Concrete Surface
Concrete Finish
Concrete Color
Concrete Texture
Concrete Pattern
Concrete Joint
Concrete Reinforcement
Concrete Mix
Concrete Strength
Concrete Slump
Concrete Air Entrainment
Concrete Curing
Concrete Placement
Concrete Formwork
Concrete Finishing
Concrete Repair
Concrete Demolition
Concrete Removal
Concrete Disposal
Concrete Recycling
Concrete Salvage
Concrete Reuse
Concrete Replacement
Concrete Restoration
Concrete Rehabilitation
Concrete Maintenance
Concrete Inspection
Concrete Testing
Concrete Quality Control
Concrete Quality Assurance
Concrete Specifications
Concrete Standards
Concrete Codes
Concrete Regulations
Concrete Permits
Concrete Fees
Concrete Costs
Concrete Estimates
Concrete Bids
Concrete Contracts
Concrete Agreements
Concrete Warranties
Concrete Guarantees
Concrete Insurance
Concrete Bonds
Concrete Liens
Concrete Claims
Concrete Disputes
Concrete Arbitration
Concrete Litigation
Concrete Settlements
Concrete Awards
Concrete Judgments
Concrete Appeals
Concrete Reversals
Concrete Remands
Concrete Modifications
Concrete Amendments
Concrete Supplements
Concrete Addenda
Concrete Errata
Concrete Corrections
Concrete Clarifications
Concrete Interpretations
Concrete Rulings
Concrete Opinions
Concrete Advisories
Concrete Bulletins
Concrete Notices
Concrete Memoranda
Concrete Letters
Concrete Reports
Concrete Studies
Concrete Surveys
Concrete Investigations
Concrete Analyses
Concrete Evaluations
Concrete Assessments
Concrete Recommendations
Concrete Conclusions
Concrete Findings
Concrete Summaries
Concrete Abstracts
Concrete Introductions
Concrete Prefaces
Concrete Forewords
Concrete Tables of Contents
Concrete Indexes
Concrete Glossaries
Concrete Bibliographies
Concrete Appendices
Concrete Exhibits
Concrete Figures
Concrete Tables
Concrete Charts
Concrete Graphs
Concrete Maps
Concrete Plans
Concrete Elevations
Concrete Sections
Concrete Details
Concrete Notes
Concrete Legends
Concrete Symbols
Concrete Abbreviations
Concrete Definitions
Concrete Terms
Concrete Conditions
Concrete Requirements
Concrete Specifications
Concrete Standards
Concrete Codes
Concrete Regulations
Concrete Permits
Concrete Fees
Concrete Costs
Concrete Estimates
Concrete Bids
Concrete Contracts
Concrete Agreements
Concrete Warranties
Concrete Guarantees
Concrete Insurance
Concrete Bonds
Concrete Liens
Concrete Claims
Concrete Disputes
Concrete Arbitration
Concrete Litigation
Concrete Settlements
Concrete Awards
Concrete Judgments
Concrete Appeals
Concrete Reversals
Concrete Remands
Concrete Modifications
Concrete Amendments
Concrete Supplements
Concrete Addenda
Concrete Errata
Concrete Corrections
Concrete Clarifications
Concrete Interpretations
Concrete Rulings
Concrete Opinions
Concrete Advisories
Concrete Bulletins
Concrete Notices
Concrete Memoranda
Concrete Letters
Concrete Reports
Concrete Studies
Concrete Surveys
Concrete Investigations
Concrete Analyses
Concrete Evaluations
Concrete Assessments
Concrete Recommendations
Concrete Conclusions
Concrete Findings
Concrete Summaries
Concrete Abstracts
Concrete Introductions
Concrete Prefaces
Concrete Forewords
Concrete Tables of Contents
Concrete Indexes
Concrete Glossaries
Concrete Bibliographies
Concrete Appendices
Concrete Exhibits
Concrete Figures
Concrete Tables
Concrete Charts
Concrete Graphs
Concrete Maps
Concrete Plans
Concrete Elevations
Concrete Sections
Concrete Details
Concrete Notes
Concrete Legends
Concrete Symbols
Concrete Abbreviations
Concrete Definitions
Concrete Terms
Concrete Conditions
Concrete Requirements

STA 5+37.5 ALTERNATE No. 1 const plastic lined reinf conc M.H. — ALT No. 2 const std brick M.H. TYPE 'B' (5' dia). STA 8+61.7 ALTERNATE No. 1 const plastic lined reinf conc M.H. — ALT No. 2 const std brick M.H. TYPE 'B' (5' dia). ALT No. 3 and 4 remain in place. — ALT No. 1 and 2 remove exist M.H.

exist rim 11.42
exist asphalt pavement
exist rim 11.43
Bell Cables
6" C.I. Water
proposed 15" S.W.S.
8" San
exist 8" Sa. In. 10.75
Existing 36" Sanitary
exist 15" R.C.P.
exist 8" Sa. In. 10.69

ALT No. 1 Remove exist pipe and Install 600 L.F. 36" R.C.P. (plastic lined).
ALT No. 2 Remove exist pipe and Install 600 L.F. 27" V.C.P. (concrete encased)
ALT No. 3 Install 600 L.F. 25" MONO-LITE lining and grout in place.
ALT No. 4 Install 600 L.F. 27" FLEXTRAN lining and grout in place.

= 0.10'
ALT 1 & 2

4+00 | 50 | 5+00 | +27.9 | 50 | 6+00 | 50 | 7+00 | 50 | 8+00 | 50 | +61.7 | 9+00 | 50

Proj No. DBKM 573009

Sheet 2 of 4

$\mathbb{E}$ M. = 1908 N.E. Corner first cast Step House of S.W. corner 2ND and GROVE.
S.M. = 1210.6 N.E. — # 2559 East 2ND STREET.

N

EXISTING 18" SAN. SEWER

EXISTING 8" SANITARY SEWER

STA 12+85 ALTERNATE No. 1 and 2 Remove exist M.H. — ALT No. 3 and 4 exist M.H. to remain in place. — ALT No. 1 const plastic lined reinf conc M.H. — ALT No. 2 const std brick M.H. TYPE "B" (5' dia).

STA 13+58 ALTERNATE No. 1, 3 and 4 const plastic lined reinf conc M.H. — ALT No. 2 const std brick M.H. TYPE "B" (5' dia).

PROPOSED 30" STORM WATER SEWER

R of W = 30'

EXISTING 36" SANITARY

PROPOSED 15" R.C.P. (storm water)

STA 13+79 Remove exist M.H. ALTERNATE No. 3 and 4 Const concrete collar around juncture between old and new pipe.

STA 14+01.9 Remove exist M.H. ALTERNATE No. 1, 2, 3 and 4. const concrete collar around juncture between old and new pipe.

NOTE No. 1 Remove exist 36" pipe to limits of new pavement. fill remainder of exist 36" sewer with sand fill and plug both ends.

EXISTING 36" SANITARY SEWER

2ND STREET

SPRUCE STREET

GROVE STREET

Alley

Limits of new pavement

Limits of new pvmt

Existing 36" San Sewer

exist. asphalt pavement

exist trim line

exist. trim line

exist. fire hydrant

proposed 15" S.D.S.

Remove exist 42" Sanitary

exist. ng. 36" Sanitary

ALT No. 1 Remove exist pipe and install 608 L.F. 30" R.C.P. (plastic lined).
ALT No. 2 Remove exist pipe and install 608 L.F. 27" V.C.P. (concrete encased)
ALT No. 3 Install 608 L.F. 28" HOBAS LINE lining and grout in place.
ALT No. 4 Install 608 L.F. 27" FLEXTEAM lining and grout in place

61 L.F. 36" R.C.P. ALT No. 3 and 4 unlined

44 L.F. 36" R.C.P. Plastic lined ALT No. 1, 2, 3, and 4

STA 10+65 ALTERNATE No. 1 const plastic lined reinf conc M.H. — ALT No. 2 const std brick M.H. TYPE "B" (5' dia). — ALT No. 3 and 4 exist M.H. to remain in place. — ALT No. 1, 2, 3 and 4 Remove exist M.H. and 36" pipe to limits of new pavement. Fill remainder of exist 36" sewer with sand fill and plug both ends.

STA 11+72 Remove exist M.H. and 36" pipe to limits of new pavement. Fill remainder of exist 36" sewer with sand fill and plug both ends.

STA 13+58 ALT No. 1 const plastic lined reinf conc M.H. ALT No. 2 const std brick M.H. TYPE "B" (5' dia).

STA 14+01.9 Remove exist M.H. ALT No. 1, 2, 3 and 4 const conc collar around juncture between old and new pipe.

Proj No. DBKM 573009

Sheet 3 of 4

KEUFFEL & ESSER CO.

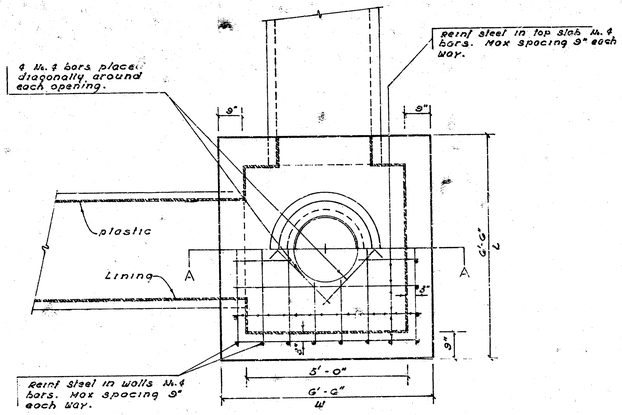

PLAN

REINF CONC MANHOLES
Alternates 1, 3, and 4

Station	H	L	W
0+36	7'-0"	6'-6"	6'-6"
13+58	8'-0"	6'-6"	6'-6"

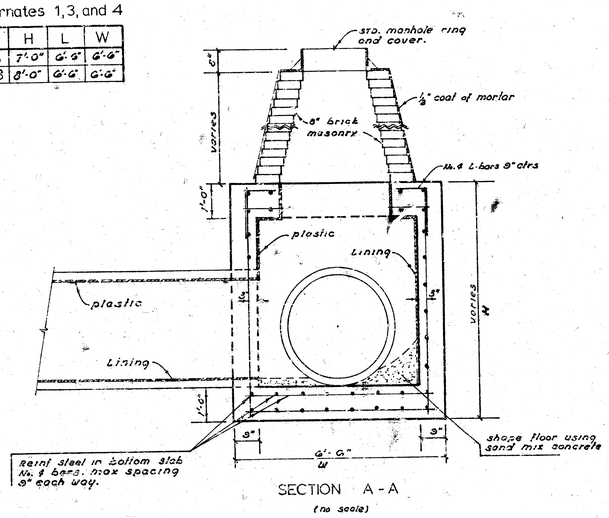

SECTION A - A
(no scale)

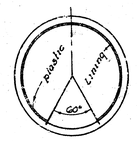

DETAIL: R.C.P. (plastic lining)

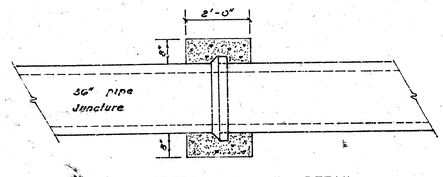

CONCRETE COLLAR DETAIL

Sta 0+00 Alternate 1, 2, 3, and 4
Sta 0+79.5 Alt 3 and 4
Sta 13+17.5 Alt 3 and 4
Sta 14+01.8 Alternate 1, 2, 3, and 4

NOTE: Contractor is to utilize Bell and Barrel Juncture between old & new pipe if at all possible.

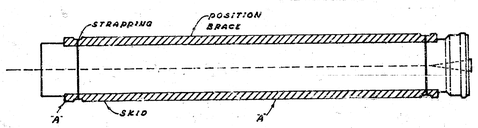

Alternate No. 4 — 27" FLEXTRAN LINING DETAIL



NOTE: The leading or forward ends of the skids should be rounded as shown for "A" above. Skids should not be less than 2' shorter than the pipe being installed. Care should be taken to install the bottom skids parallel to the ℄ of the pipe to prevent rolling of pipe in casing. Match skids for strapping. Strapping should be spaced according to diagram.

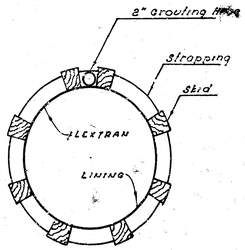

No. Scale

96° @ SKID SPACING except for two skids.

Sheet 1 of 4 Proj No. DBKM 573009

14 2 1 (13)