SANITARY SEWER EXTENSION

TO SERVE LOT 3, BLOCK 1, OLD TOWN SQUARE

PROJECT NUMBER 1293 PPS (607861)

GENERAL NOTES

1. Contractor will be required to provide a minimum advance notice of twenty-four (24) hours to utility companies prior to starting any excavation as follows:

   Kansas One-Call 687-2470

   The Contractor must notify the following in case of an emergency:

Cox Communications	262-0661
Kansas Gas Service	383-8600
Westar	383-8600
Aquila Energy	1-800-303-0357
Southwestern Bell Telephone Company	1-800-286-8313
City of Wichita Water Department	262-6000
City of Wichita Sewer Maintenance	262-6000

2. Underground utility service lines and overhead utility pole lines are to be adjusted as necessary by others prior to construction unless the plans specifically call for their adjustment by the Contractor or unless the plans specifically identify a utility to be adjusted by its owner during construction. Existing utilities and their location, as shown on the plans, represent the best information obtainable for design. Location information has been obtained from the various utility companies and is either from company record drawings or company-provided field locations. The Contractor will be required to work around existing utilities within the right-of-way which do not conflict with proposed construction.

3. A saw cut of at least one-half the depth of existing surface courses or one-fourth the depth of existing total pavement thickness shall be provided at locations where proposed construction abuts an existing surface course or pavement for which partial removal of that surface or pavement is required, except when such saw cuts are within three (3) feet of an existing joint the limits of removal shall be extended to the existing joint. Such saw cuts will not be paid for directly and this cost shall be considered as subsidiary to the removal of the surface or pavement.

4. Rubble from the removal of miscellaneous structures and excess excavation which is to be wasted shall be disposed of on sites to be provided by the Contractor. These sites shall be approved by the Engineer as to suitability, appearance and site location. Locations that, in the opinion of the Engineer, will leave an unsightly appearance will not be approved.

5. All disposal sites must be approved by the Kansas Department of Health and Environment. Material either stockpiled or disposed of in c flood plain would require a Kansas State Board of Agriculture permit. Any material dumped in waters of the United States or wetlands is subject to U.S. Corps permitting regulations. Any material buried or stockpiled beyond approved of Engineers construction limits would require additional archeological investigations unless buried in a previously approved borrow location.

6. The Engineer shall take field ties to all quarter section corners. The Contractor shall set a City survey monument in the required location where such quarter section corners fall within the limits of pavement construction. Survey monuments will be furnished by the City. The Engineer will accurately located and install the iron at the quarter section corner. This work will not be paid for directly, but shall be considered subsidiary to the other pay items of work in the contract.

7. The Contractor shall maintain flow through existing sewer during construction.

8. The Contractor shall give all property owners and/or tenants of developed property directly abutting the construction of this project a minimum of ten (10) days advance notice prior to start of construction.

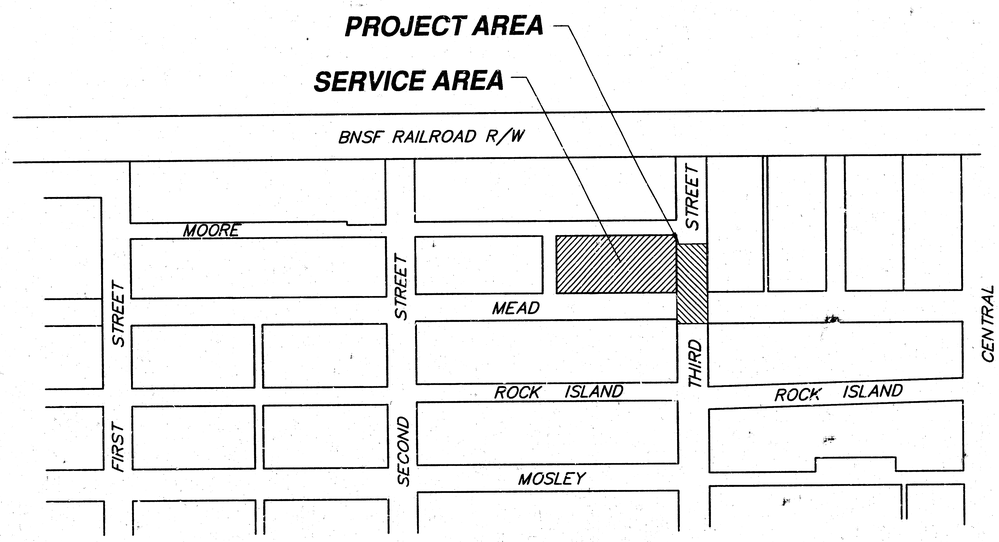

Scale 1" = 60'

INDEX OF SHEETS

1. COVER SHEET
2. PLAN/PROFILE
3. SHALLOW TYPE 'P' MANHOLE DETAILS
4. PLAT COPY

BENCH MARKS

1. "□" CUT W. END CURB RETURN N.W. CORNER OF 2ND STREET & MOSLEY ELEV.=111.16 (CITY OF WICHITA DATUM)
2. RAILROAD SPIKE IN S. FACE POWER POLE 20' E. OF CL ROCK ISLAND AND 25' N. OF CL SECOND ST. ELEV.=112.07 (CITY OF WICHITA DATUM)
3. "□" CUT IN TOP CURB EAST RETURN OF S.E. CORNER MOORE AND SECOND ST. ELEV. 111.23 (CITY OF WICHITA DATUM)
4. RAILROAD SPIKE IN S. FACE POWER POLE 60' N. OF CL THIRD ST. AND 36' N. OF CL MEAD ELEV.=113.17 (CITY OF WICHITA DATUM)

APPROVED AS NOTED
BY CITY ENGINEER OF WICHITA

Sanitary Sewers VRH 10/28/02

Storm Sewers _____

Driveway Approaches _____

Water Mains _____

Paving _____

NOTE TO CONTRACTORS

Inspection and testing for this project are to be provided by a Licensed Consulting Engineering Firm under contract with the Owner/Developer. Said inspection to be in accordance with the City of Wichita standard construction engineering practices and certified by a Licensed Professional Engineer. No work shall be performed in dedicated easements or public right-of-way by the Contractor without such inspection, nor shall any work be commenced without written authorization by the City Engineer.

THOMAS CHARLES ROHR
LICENSED
9621
10-28-02
KANSAS
PROFESSIONAL ENGINEER

"AS BUILT" per plan
1/02/03 BY RHB

1/9/03
RDL

2286X

CITY OF WICHITA, KANSAS
NEIL D. CABLE, P.E., CITY ENGINEER

Ruggles & Bohm, P.A.
Engineering, Surveying, Land Planning
924 North Main (316) 264-8008
Wichita, Kansas 67203 (316) 264-4621 fax
www.rbkansas.com E-mail: info@rbkansas.com

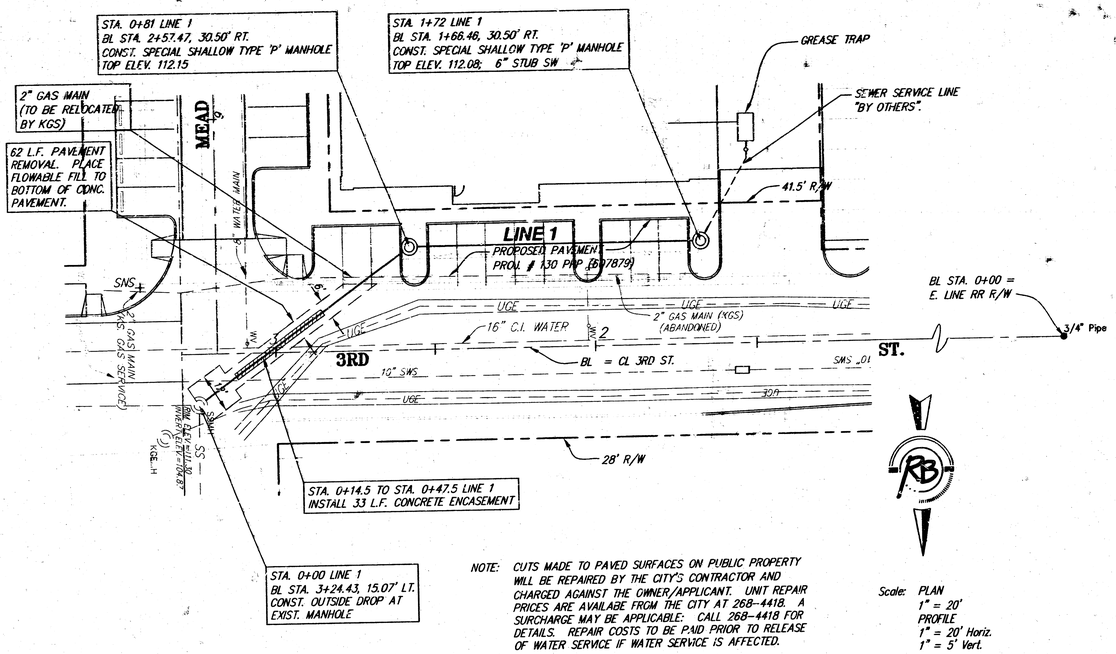

NOTE: CUTS MADE TO PAVED SURFACES ON PUBLIC PROPERTY WILL BE REPAIRED BY THE CITY'S CONTRACTOR AND CHARGED AGAINST THE OWNER/APPLICANT. UNIT REPAIR PRICES ARE AVAILABE FROM THE CITY AT 268-4418. A SURCHARGE MAY BE APPLICABLE: CALL 268-4418 FOR DETAILS. REPAIR COSTS TO BE PAID PRIOR TO RELEASE OF WATER SERVICE IF WATER SERVICE IS AFFECTED.

Scale: PLAN
1" = 20'
PROFILE
1" = 20' Horiz.
1" = 5' Vert.

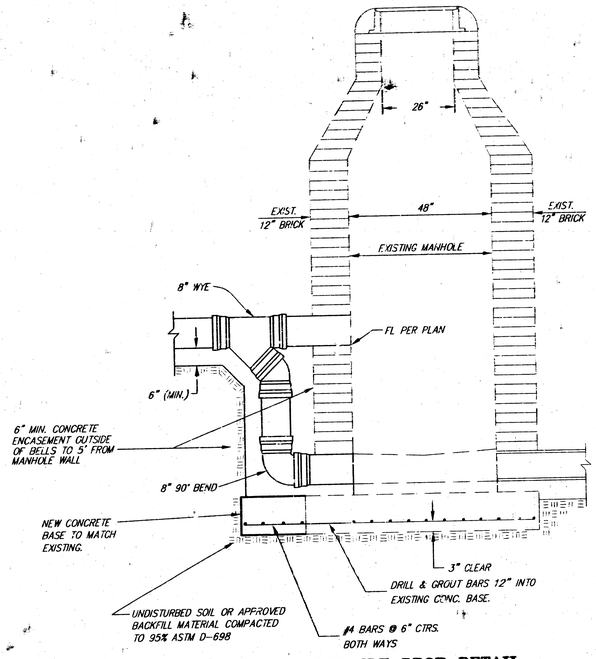

OUTSIDE DROP DETAIL

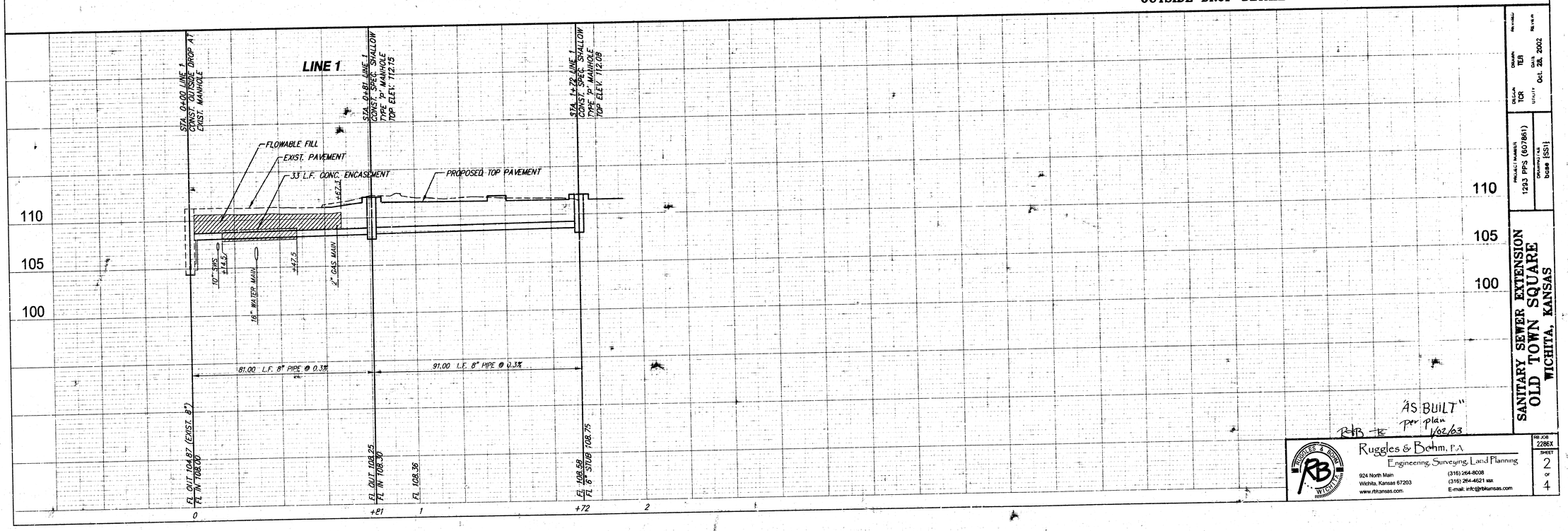

"AS BUILT" per plan 1/02/03

Ruggles & Bohm, P.A.
Engineering, Surveying, Land Planning
924 North Main
Wichita, Kansas 67203
www.rbkansas.com
(316) 264-8008
(316) 264-4621 fax
E-mail: info@rbkansas.com

DESIGN TCR | DRAWN TEB | REVISED
UTILITY | DATE Oct. 28, 2002 | REVIEW

PROJECT NUMBER 1293 PPS (607861)
DRAWING FILE base {SS1}

SANITARY SEWER EXTENSION
OLD TOWN SQUARE
WICHITA, KANSAS

RB JOB 2286X
SHEET 2 of 4

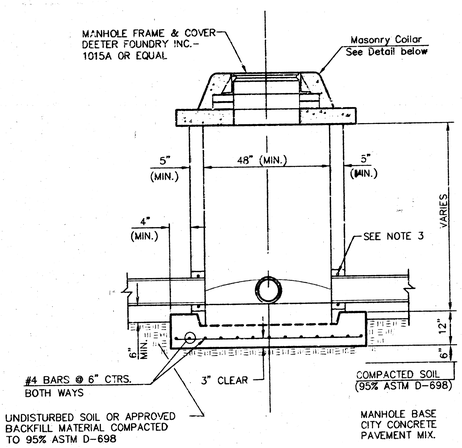

SHALLOW TYPE "P" MANHOLE

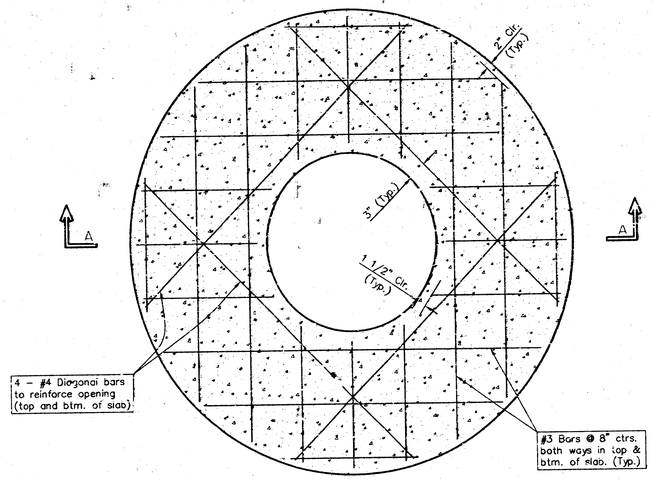

PLAN

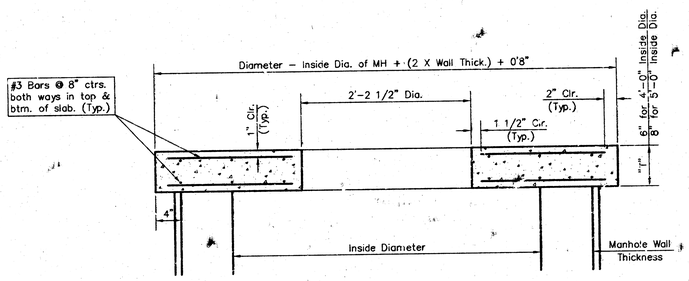

SECTION A-A

CONCRETE SLAB DETAILS

GENERAL NOTES

1. ALL PRECAST CONCRETE MANHOLE SECTIONS SHALL CONFORM TO THE LATEST REVISIONS OF A.S.T.M. C478 AS MODIFIED BY THE SPECIFICATIONS.
2. NON-SHRINK GROUT SHALL BE NON-METALLIC TYPE.
3. APPROVED FLEXIBLE WATERSTOP GASKETS SHALL BE INSTALLED TO JOIN THE SEWER TO THE MANHOLE WALL WHEN A.B.S. COMPOSITE PIPE OR P.V.C. PIPE IS USED. FOR OTHER TYPES OF PIPE THE SEWER SHALL BE GROUTED IN PLACE WITH NON-SHRINK GROUT. THE SEWER PIPE SHALL BE SUPPORTED WITH CONCRETE ENCASEMENT A MINIMUM OF 3 FEET FROM THE MANHOLE WALL AND TO THE FIRST JOINT FOR V.C.P. SUCH THAT THE JOINT REMAINS FLEXIBLE.
4. ALL INSIDE SURFACES OF THE CONCRETE MANHOLE WHICH WOULD BE EXPOSED TO SEWER GAS SHALL BE COATED WITH 2 COATS THEMEC SERIES 66 HI-BUILD EPOXOLINE, DRY THICKNESS OF 8 MILS (MIN.)
5. EXTERIOR MANHOLE WALLS SHALL BE COATED WITH 1 COAT MOBILARMA 633 BITUMINOUS COATING.
6. JOINT SEALING COMPOUND SHALL BE KENT SEAL NO. 2 OR APPROVED EQUAL.
7. PRECAST MANHOLES SHALL BE SET AT LEAST 4 INCHES INTO THE MANHOLE BASE.
8. TOP OF MANHOLE FLOOR SLAB SHALL BE AT LEAST 3 INCHES BELOW THE FLOW LINE OF THE OUTLET PIPE TO INSURE SUFFICIENT MINIMUM THICKNESS OF SHAPED INVERT.
9. LIFTING HOLES SHALL BE FILLED WITH NON-SHRINK GROUT AND THE INTERIOR SURFACE COATED AS SPECIFIED.
10. MORTAR USED IN MASONRY CONSTRUCTION SHALL CONTAIN 5 SACKS OF CEMENT PER CUBIC YARD. CONCRETE USED IN MANHOLE BASES SHALL CONFORM TO THE REQUIREMENTS OF CONCRETE FOR CONCRETE PAVEMENT CONSTRUCTION AS SPECIFIED IN THE CITY STANDARD PAVING SPECIFICATIONS USING CITY CONCRETE PAVEMENT MIX WITHOUT AIR ENTRAINING ADMIXTURE. MORTAR SHALL BE PLACED AROUND THE MANHOLE RING AS SHOWN ON THE DRAWINGS WHEN MANHOLES ARE CONSTRUCTED IN UNPAVED AREAS. MANHOLES CONSTRUCTED WHERE PIPE SIZES ARE 24" SMALLER THAN 24" SHALL HAVE AN INSIDE DIAMETER OF 4'. MANHOLES CONSTRUCTED WHERE PIPE SIZES ARE 24" OR LARGER SHALL HAVE AN INSIDE DIAMETER OF 5'. COMPLETED MANHOLE SHALL BE WITHOUT LEAKS AND WATER TIGHT.
11. REINFORCING STEEL SHALL BE INSTALLED IN THE MANHOLE BASES AND SHALL CONSIST OF NO. 4 BARS PLACED ON 6" CENTERS IN BOTH DIRECTIONS. THE MANHOLE BASE REINFORCEMENT SHALL BE PLACED AT LEAST 3" ABOVE THE BOTTOM OF THE MANHOLE BASE. ALL COSTS FOR FURNISHING AND INSTALLING REINFORCING STEEL SHALL BE INCLUDED IN THE UNIT PRICE BID FOR THE MANHOLE.
12. THE FLOORS OF ALL MANHOLES SHALL BE SHAPED WITH FLOW CHANNELS SUCH THAT THE MANHOLES WILL BE SELF CLEANING AND FREE OF AREAS WHERE SOLIDS COULD BE DEPOSITED AS SEWAGE FLOWS THROUGH THE MANHOLE FROM ALL INLET PIPES TO THE OUTLET PIPE. FLOW CHANNELS SHALL BE FORMED TO MATCH THE BOTTOM HALVES OF THE INFLOWING PIPES AND THE OUTFLOWING PIPE AS SHOWN BY THE DRAWINGS EXCEPT FOR INSIDE DROP MANHOLES. FLOW CHANNELS FOR INSIDE DROP MANHOLES SHALL BE CONSTRUCTED AS INDICATED BY THE DRAWING. MANHOLE FLOORS SHALL HAVE SLOPES OF 3 INCHES PER FOOT IN THE AREAS OUTSIDE OF THE FLOW CHANNELS SLOPED TOWARD THE FLOW CHANNELS. PIPES LAID THROUGH MANHOLES SHALL HAVE THE TOP HALF REMOVED TO NEAT LINES FOR THE FULL INSIDE DIAMETER OF THE MANHOLE. MANHOLE FLOORS SHALL THEN BE SHAPED AROUND THE BOTTOM HALF OF THE PIPE WHICH FORMS THE FLOW CHANNEL.
13. PIPES INSTALLED WITHIN THE EXCAVATION MADE FOR THE MANHOLE SHALL BE CRADLED WITH CONCRETE TO THE LIMITS OF THE MANHOLE EXCAVATION. WHEN CLAY PIPE IS USED, THE CRADLE SHALL EXTEND TO THE FIRST JOINT OUTSIDE THE MANHOLE. THE CRADLE SHALL BE TERMINATED AT THE CLAY PIPE JOINT IN A MANNER WHICH WILL MAINTAIN THE FLEXIBILITY OF THE JOINT. COST OF CRADLE WITHIN MANHOLE EXCAVATION OR TO CLAY PIPE JOINTS ADJACENT TO MANHOLE SHALL BE INCLUDED IN THE UNIT PRICE BID FOR THE MANHOLE.
14. MANHOLE COVER CASTINGS AND MANHOLE FRAME CASTINGS SHALL CONFORM TO THE REQUIREMENTS AS INDICATED IN THE STANDARD SPECIFICATIONS AND AS SHOWN IN THE STANDARD DETAIL DRAWING.
15. ALL BRICK USED IN MANHOLE CONSTRUCTION SHALL MEET GRADE SW OF ASTM C652 OR C62-87.

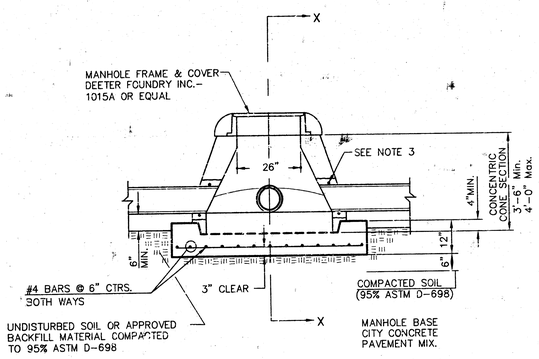

SPECIAL SHALLOW TYPE "P" MANHOLE

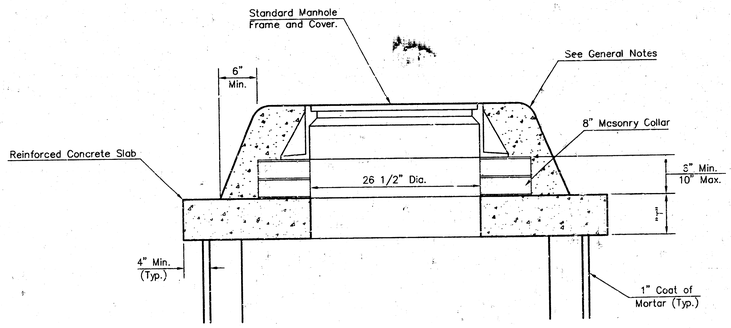

MASONRY COLLAR DETAIL

THE CITY OF WICHITA

CITY ENGINEER'S OFFICE
CITY HALL - SEVENTH FLOOR
455 NORTH MAIN STREET
WICHITA, KANSAS 67202
(316) 268-4601
(316) 268-4114 FAX

SHALLOW TYPE "P" MANHOLE DETAILS

M. E. LINDEBAK P.E. - CITY ENGINEER

PROJECT NUMBER	OCA #
1293 PPS	607861
DATE MAR 96	SHEET 3 OF 4

OLD TOWN SQUARE ADDITION

Wichita, Sedgwick County, Kansas

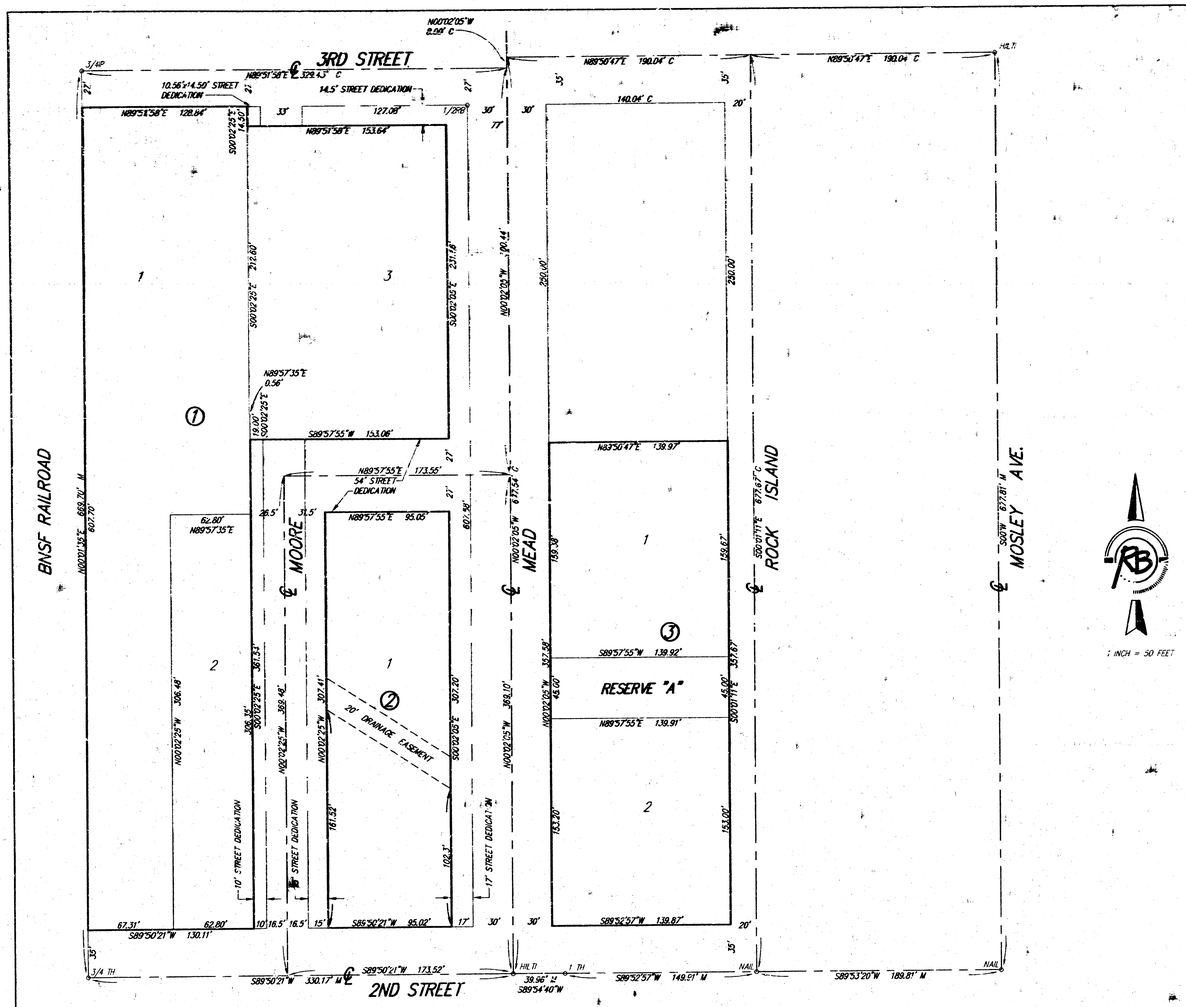

BENCH MARK: "□" CUT W. END CURB RETURN N.W. CORNER OF 2ND STREET & MOSLEY ELEV.=111.16 (CITY OF WICHITA DATUM)

M = MEASURED
C = CALCULATED

- ○1/2RB = 1/2" REBAR (FOUND)
- ○3/4IP = 3/4" IRON PIPE (FOUND)
- ○HILTI = HILTI NAIL (FOUND)
- ○NAIL = NAIL (FOUND)
- ○3/4 TH = 3/4" IRON PIPE IN THIMBLE (FOUND)
- ○1 TH = 1" IRON PIPE IN THIMBLE (FOUND)
- ●RAB = 1/2" REBAR W/RAB CAP (SET)

State of Kansas) SS
Sedgwick County)

We, Ruggles & Bohm, P.A., Land Surveyors in aforesaid county and state, do hereby certify that, under the supervision of the undersigned, we have surveyed and platted "OLD TOWN SQUARE ADDITION", Wichita, Sedgwick County, Kansas, and that the accompanying plat is a true and correct exhibit of the property surveyed, described as being a replat of the following described property:

Lots 1 through 10, Howe and West's Subdivision in City of Wichita, Kansas Sedgwick County, Kansas, Lots 37, 39, 41 and 43, East Wichita Addition, Wichita, Sedgwick County, Kansas, together with any vacated alley and street Rights-of-way bounded by 2nd Street on the south, 3rd Street on the north, Mosley Avenue on the east and The Atchinson Topeka & Santa Fe Rail Road on the west.

And Lots 1 through 7, Block A, H.L. and Annie M. Taylor's Addition to Wichita, Kansas, and the unplatted parcel lying north of Second Street and adjacent to said Lot 1; except the east 10 feet thereof; together with the east 10 feet of vacated Mead Avenue adjacent on the west to said Lots and parcel.

All Public easements and dedications being vacated by virtue of K.S.A. 12-512(b).

Ruggles & Bohm, P.A.

_____ Land Surveyor
Thomas C. Ruggles

Know all men by these presents that we, the undersigned, have caused the land described in the surveyors certificate to be platted into Lots, Blocks and Streets, to be known as "OLD TOWN SQUARE ADDITION", Wichita, Sedgwick County, Kansas. The utility easements are hereby granted as indicated for the construction and maintenance of all public utilities. The drainage easement is hereby granted as indicated for the construction and maintainance of a storm sewer system. The streets are hereby dedicated to and for the use of the public. Reserve "A" is to be owned by the City of Wichita for open space and public access.

The City of Wichita

At the direction of the City Council

_____ City Manager
Chris Cherches

_____ City Clerk
Pat Burnett

Old Town Warren Theatre, LLC

_____

State of Kansas) SS
Sedgwick County)

The foregoing instrument acknowledged before me, this _____ day of _____ 2002, by _____.

_____ Notary Public

My appointment expires _____

SE Building, L.L.C.

_____

State of Kansas) SS
Sedgwick County)

The foregoing instrument acknowledged before me, this _____ day of _____ 2002, by _____.

_____ Notary Public

My appointment expires _____

DD Realty, L.L.C.

_____

State of Kansas) SS
Sedgwick County)

The foregoing instrument acknowledged before me, this _____ day of _____ 2002, by _____.

_____ Notary Public

My appointment expires _____

We, the undersigned, holders of a mortgage on the above described property, do hereby consent to this plat of "OLD TOWN SQUARE ADDITION, Wichita, Sedgwick County, Kansas.

_____

We, the undersigned, holders of a mortgage on the above described property, do hereby consent to this plat of "OLD TOWN SQUARE ADDITION, Wichita, Sedgwick County, Kansas.

_____

We, the undersigned, holders of a mortgage on the above described property, do hereby consent to this plat of "OLD TOWN SQUARE ADDITION, Wichita, Sedgwick County, Kansas.

_____

This plat of "OLD TOWN SQUARE ADDITION", Wichita, Sedgwick County, Kansas, has been submitted to and approved by the Wichita-Sedgwick County Metropolitan Area Planning Commission, Wichita, Kansas.
Dated this ____ day of _____, 2002.

Wichita-Sedgwick County Metropolitan Area Planning Commission

_____ Chairman
J.D. Michaelis

_____ Acting Secretary
Michael E. Lindebak

This plat approved and all dedications shown hereon accepted by the City Council of the City of Wichita, Kansas, this ____ day of _____, 2002.

At the direction of the City Council

_____ City Manager
Chris Cherches

_____ City Clerk
Pat Burnett

Reviewed in accordance with K.S.A. 58-2005 on this _____ day of _____, 2002.

_____ Deputy County Surveyor
Tricia L. Robello, LS #1246
Sedgwick County Kansas

Entered on transfer record this ____ day of _____, 2002.

_____ County Clerk
Don Brace

State of Kansas) SS
Sedgwick County)

This is to certify that this plat has been filed for record in the office of the Register of Deeds, this ____ day of _____ 2002, at ____ o'clock ____ M; and is duly recorded.

_____ Register of Deeds
Bill Meek

_____ Deputy
Linda Kizzar

DWG FILE: 2199P-WC
PROJECT NO. 02502199P
August 26, 2002

Ruggles & Bohm, P.A.
Engineering, Surveying, Land Planning
924 North Main
Wichita, Kansas 67203
www.rbkansas.com
(316) 264-8008
(316) 264-4621 fax
E-mail: info@rbkansas.com