SANITARY SEWER PLANS FOR

PARK VISTA THIRD PHASE 2

AN ADDITION TO
CITY OF BEL AIRE
SEDGWICK COUNTY, KANSAS
AUGUST 1999

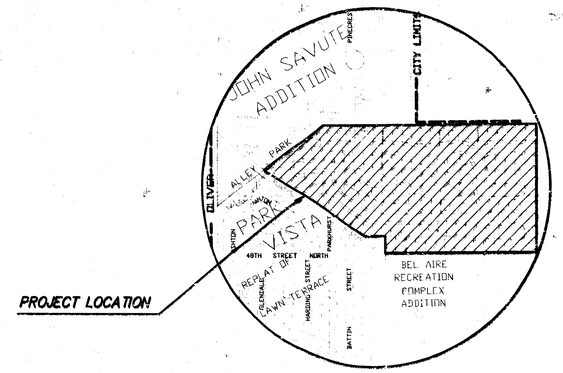

GENERAL NOTES

1. THE CONTRACTOR SHALL BE RESPONSIBLE FOR PRESERVING PROPERTY IRONS. THE CONTRACTOR WILL BE REQUIRED TO RE-ESTABLISH ANY PROPERTY IRONS WHICH ARE DAMAGED OR DESTROYED BY HIS CONSTRUCTION OPERATIONS. SUCH IRONS SHALL BE RE-ESTABLISHED BY A LICENSED LAND SURVEYOR IN ACCORDANCE WITH STATE LAWS.

2. EXISTING UTILITIES AND THEIR LOCATIONS, AS SHOWN ON THE PLANS REPRESENT THE BEST INFORMATION OBTAINABLE FOR DESIGN. LOCATION INFORMATION HAS BEEN OBTAINED FROM THE VARIOUS UTILITY COMPANIES AND IS EITHER FROM COMPANY RECORD DRAWINGS OR COMPANY PROVIDED FIELD LOCATIONS. THE PLAN LOCATIONS SHOWN ARE NOT GUARANTEED. ADDITIONAL EXISTING UTILITIES MAY ALSO BE ENCOUNTERED.

3. CONTRACTOR WILL BE REQUIRED TO PROVIDE A MINIMUM ADVANCE NOTICE OF FORTY-EIGHT (48) HOURS TO UTILITY COMPANIES PRIOR TO STARTING ANY EXCAVATION AS FOLLOWS:

   KANSAS ONE-CALL 1-800-344-7233
   or 687-2470 (LOCAL WICHITA)

   THE CONTRACTOR MUST NOTIFY THE FOLLOWING IN CASE OF AN EMERGENCY:

SOUTHWESTERN BELL TELEPHONE COMPANY	1-800-734-7590
CABLEVISION	263-2061
KG&E (GAS & ELECTRIC)	383-8600
CITY OF WICHITA WATER & SEWER MAINTENANCE	268-4908
ARKLA GAS COMPANY	946-0096
CITY OF BEL AIRE (Terry Dreiling)	744-2451

4. RUBBLE FROM THE REMOVAL OF MISCELLANEOUS STRUCTURES AND EXCESS EXCAVATION WHICH IS TO BE WASTED SHALL BE DISPOSED OF ON SITES TO BE PROVIDED BY THE CONTRACTOR. THESE SITES SHALL BE APPROVED BY THE ENGINEER AS TO SUITABILITY, APPEARANCE AND SITE LOCATION. LOCATIONS THAT, IN THE OPINION OF THE ENGINEER, WILL LEAVE AN UNSIGHTLY APPEARANCE WILL NOT BE APPROVED. ALL DIPOSAL SITES MUST BE APPROVED BY THE KANSAS DEPARTMENT OF HEALTH AND ENVIRONMENT. MATERIAL EITHER STOCKPILED OR DISPOSED OF IN A FLOOD PLAIN WOULD REQUIRE A KANSAS STATE BOARD OF AGRICULTURE PERMIT. ANY MATERIAL DUMPED IN WATERS OF THE UNITED STATES OR WETLANDS IS SUBJECT TO U.S. CORPS OF ENGINEERS PERMITTING REGULATIONS. ANY MATERIAL BURIED OR STOCKPILED BEYOND APPROVED CONSTRUCTION LIMITS WOULD REQUIRE ADDITIONAL ARCHAEOLOGICAL INVESTIGATIONS UNLESS BURIED IN A PREVIOUSLY APPROVED BORROW LOCATION.

5. COST OF EXCAVATION, HAULING, AND DUMPING OF EXCESS EXCAVATION SHALL BE SUBSIDIARY TO THE PROJECT.

6. A PORTION OF EXCESS EXCAVATED MATERIAL SHALL BE MOUNDED AROUND MANHOLES WHICH EXTEND MORE THAN ONE (1) FOOT ABOVE THE EXISTING GROUND. SUCH MOUNDS SHALL BE CONSTRUCTED WITH A SIX (6) FOOT DIAMETER FLAT TOP WITH 4 TO 1 SIDE SLOPES DOWN TO THE ORIGINAL GROUND. THE ELEVATION OF THE FLAT TOP OF THE MOUND SHALL BE 0.4 FOOT BELOW THE TOP OF THE MANHOLE.

7. ALL STUBS AND PLUGGED PIPES SHALL BE LOCATED WITH GREEN PLASTIC TAPE IN THE SAME MANNER AS RISERS.

8. PRIOR TO LAYING SEWER LINES USING EXISTING STUBS IN EXISTING MANHOLES, THE CONTRACTOR SHALL EXPOSE AND VERIFY THE ELEVATION, GRADE AND ALIGNMENT OF EXISTING STUBS AND NOTIFY THE ENGINEER OF ANY DEVIATION FROM THE PLAN. WHERE CONNECTION TO AN EXISTING MANHOLE THAT DOES NOT HAVE AN EXISTING STUB OR THE STUB IS UNUSABLE DUE TO ELEVATION GRADE OR ALIGNMENT, THE CONTRACTOR SHALL RESHAPE THE EXISTING MANHOLE INVERT TO PROVIDE SMOOTH FLOW. THE COST OF RESHAPING EXISTING MANHOLE INVERTS IS INCIDENTAL TO THE PROJECT.

9. TREES AND SHRUBS IN PUBLIC RIGHT-OF-WAY WHICH ARE IN DIRECT CONFLICT WITH PROPOSED NEW CONSTRUCTION SHALL BE REMOVED BY THE CONTRACTOR WITH THE ENGINEER'S APPROVAL. TREES AND SHRUBS WHICH ARE NOT IN DIRECT CONFLICT WITH PROPOSED NEW CONSTRUCTION SHALL BE SAVED AND PROTECTED FROM DAMAGE.

10. ALL DISTURBED AREAS TO BE SEEDED WITH RYE GRASS AT A RATE OF 200LBS./ ACRE WITHIN 10 DAYS OF CONSTRUCTION. CONTRACTOR TO PREPARE GROUND PER CITY SPEC. COST IS SUBSIDIARY TO SITE PREPARATION AND RESTORATION.

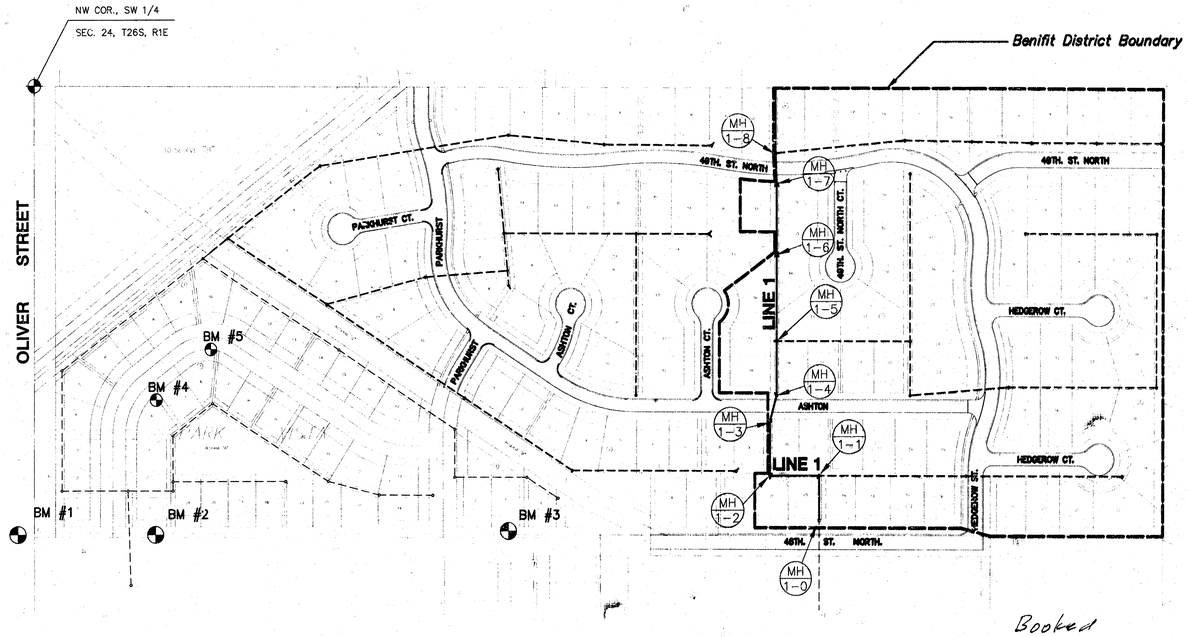

LOCATION MAP

APPROVED AS NOTED
BY CITY ENGINEER OF WICHITA

SANITARY SEWERS_____

STORM SEWERS_____

DRIVEWAY APPROACHED_____

WATER MAINS_____

PAVING_____

NOTE TO CONTRACTOR

INSPECTION AND TESTING FOR THIS PROJECT IS TO BE PROVIDED BY A LICENSED CONSULTING ENGINEERING FIRM UNDER CONTRACT WITH THE OWNER/DEVELOPER. SAID INSPECTION TO BE IN ACCORDANCE WITH THE CITY OF WICHITA STANDARD CONSTRUCTION ENGINEERING PRACTICES AND CERTIFIED BY A LICENSED PROFESSIONAL ENGINEER. NO WORK SHALL BE PERFORMED IN DEDICATED EASEMENTS OR THE PUBLIC RIGHT-OF-WAY BY THE CONTRACTOR WITHOUT SUCH INSPECTION NOR SHALL ANY WORK BE COMMENCED IN DEDICATED EASEMENTS OR PUBLIC RIGHT-OF-WAY WITHOUT WRITTEN AUTHORIZATION BY THE CITY ENGINEER.

BENCHMARKS

BM #1 "□" CUT TOP OF CURB N. END W. SIDE OLIVER DR. (OLIVER & 48TH ST. NO.) ELEV.=1406.235

BM #2 TOP OF CURB N. END W. SIDE GLENDALE (GLENDALE & 48TH ST. NO.) ELEV.=1410.695

BM #3 "□" CUT TOP OF CURB N. END E. SIDE BATTIN ST. (BATTIN & 48TH ST. NO.) ELEV.=1418.135

BM #4 "□" CUT NW COR. INLET W. SIDE ASHTON @ N.E. COR. LOT 3, BLK. 1, PARKVISTA ADD. ELEV.=1409.78

BM #5 "□" CUT ON TOP OF CURB N. SIDE ASHTON @ @ S.E. COR. LOT 10, BLK. 1, PARKVISTA ADD. ELEV.=1411.76

INDEX TO DRAWINGS

SHEET NO.	DESCRIPTION
1	TITLE SHEET
2	MANHOLE DETAILS
3	LINE 1
4	FINAL PLAT

N

SCALE 1"=150'

Booked
P-124
4-18-00
R. Loomis

AS BUILT
02/15/00
W.B. Carter

CITY OF WICHITA
PRIVATE PROJECT NO. 934PPS (607861)

MID-KANSAS ENGINEERING
CONSULTANTS, INC.
411 N. WEBB ROAD
WICHITA, KS. 67206
316-684-9600

PARK VISTA THIRD ADDITION PHASE 2
PROJECT NAME

SANITARY SEWER PLANS
SHEET TITLE

JTC	GJR	JTC
DESIGN BY:	DRAWN BY:	CHECKED BY:
AUG. 1999	97113	1 / 4
DATE	JOB NO.	SHEET/OF

I:\BELAIRE\97113\SANVPHASE2\ASBUI\JPS\PHASE2BT.DWG Wed Mar 08 12:06:29 2000

PARK VISTA THIRD ADDITION
PHASE II SAN. SEWER LATERAL
LINE 1

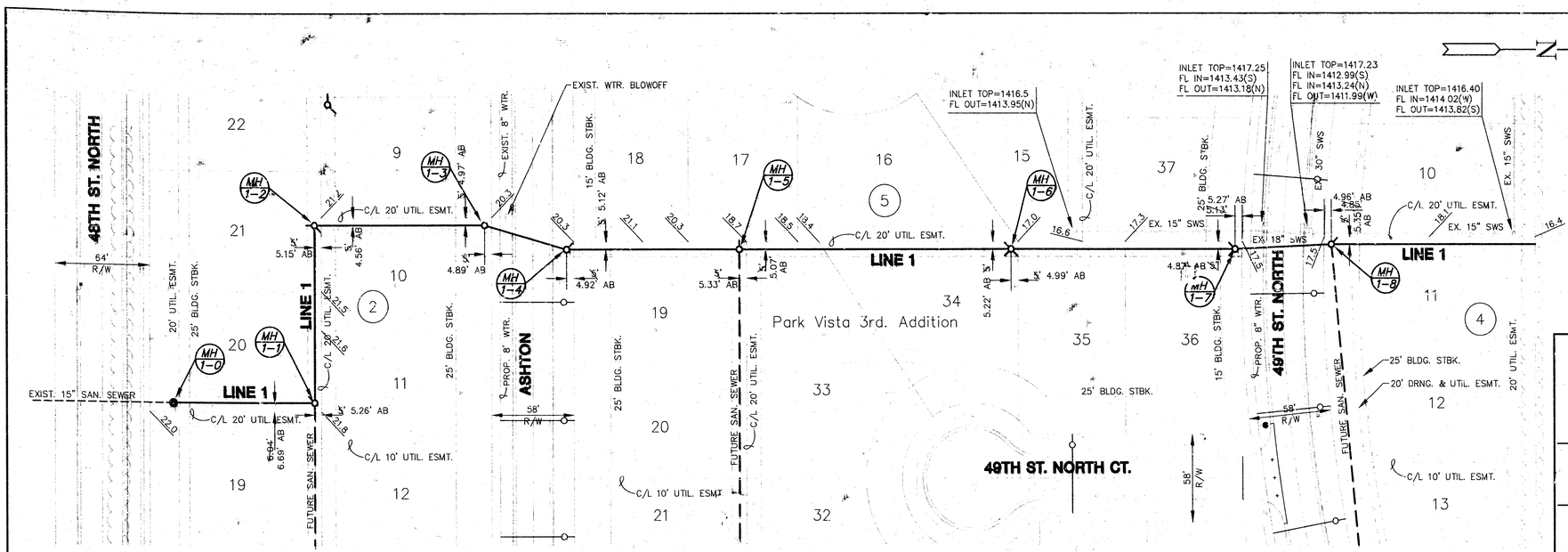

NOTE: EASEMENT GRADING REQUIRED MH 1-0 THRU MH 1-3
FOR INFORMATION ONLY:
CUT= 10.5 CY
FILL= 27.0 CY

NOTE: NO EASEMENT GRADING REQUIRED MH 1-3 THRU MH 1-4

NOTE: EASEMENT GRADING REQUIRED MH 1-4 THRU MH 1-7
FOR INFORMATION ONLY:
CUT= 432.0 CY
FILL= 7.5 CY

NOTE: NO EASEMENT GRADING REQUIRED MH 1-7 THRU MH 1-8

NOTE: EASEMENT GRADING REQUIRED MH 1-8 THRU STA 10+76.98
FOR INFORMATION ONLY:
CUT= 18.5 CY
FILL= 10.5 CY

PLAN - LINE 1

Scale: Horz. 1"=40'

EASEMENT GRADING DETAIL

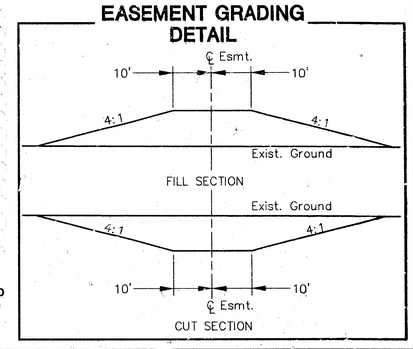

PROFILE - LINE 1

Scale: Horz. 1"=40'
Scale: Vert. 1"=5'

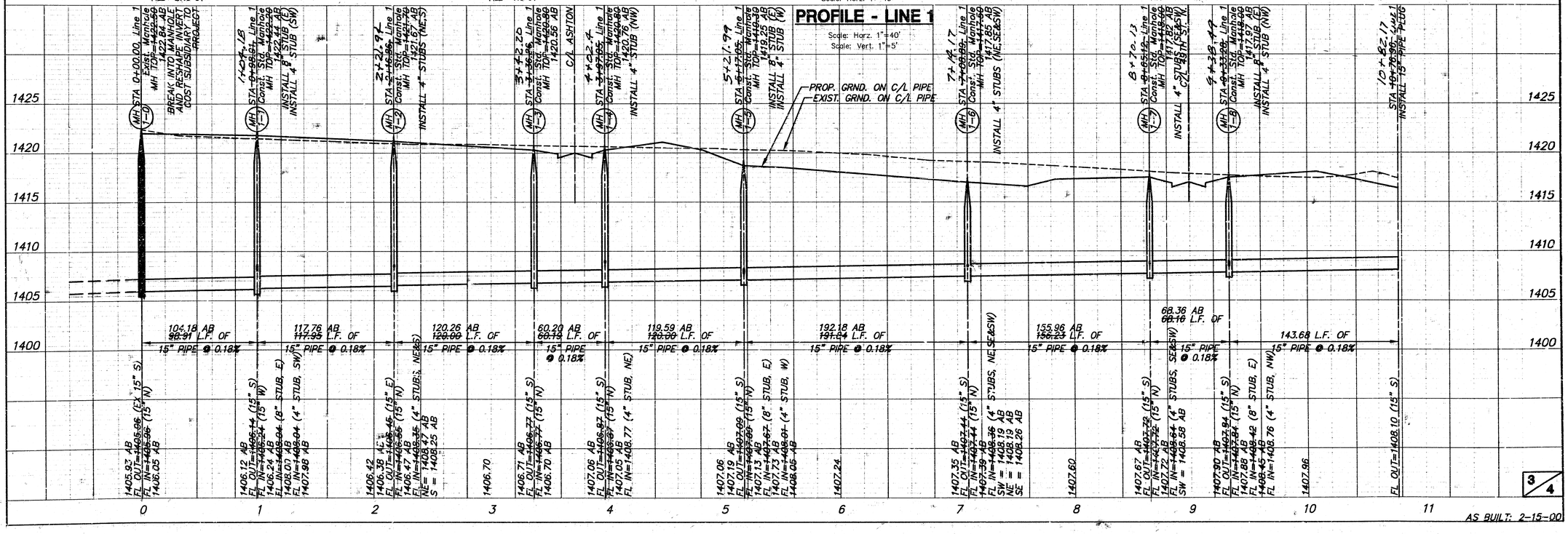

AS BUILT: 2-15-00

I:\BELAIRE\97113\SAN\PHASE2\ASBUILTS\PHA'EP51.DWG Wed Mar 06 12:04:59 2000

SANITARY SEWER PLANS FOR

PARK VISTA THIRD PHASE 2

AN ADDITION TO
CITY OF BEL AIRE
SEDGWICK COUNTY, KANSAS
AUGUST 1999

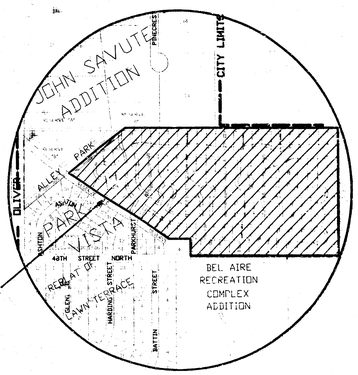

GENERAL NOTES

1. THE CONTRACTOR SHALL BE RESPONSIBLE FOR PRESERVING PROPERTY IRONS. THE CONTRACTOR WILL BE REQUIRED TO RE-ESTABLISH ANY PROPERTY IRONS WHICH ARE DAMAGED OR DESTROYED BY HIS CONSTRUCTION OPERATIONS. SUCH IRONS SHALL BE RE-ESTABLISHED BY A LICENSED LAND SURVEYOR IN ACCORDANCE WITH STATE LAWS.

2. EXISTING UTILITIES AND THEIR LOCATIONS, AS SHOWN ON THE PLANS REPRESENT THE BEST INFORMATION OBTAINABLE FOR DESIGN. LOCATION INFORMATION HAS BEEN OBTAINED FROM THE VARIOUS UTILITY COMPANIES AND IS EITHER FROM COMPANY RECORD DRAWINGS OR COMPANY PROVIDED FIELD LOCATIONS. THE PLAN LOCATIONS SHOWN ARE NOT GUARANTEED. ADDITIONAL EXISTING UTILITIES MAY ALSO BE ENCOUNTERED.

3. CONTRACTOR WILL BE REQUIRED TO PROVIDE A MINIMUM ADVANCE NOTICE OF FORTY-EIGHT (48) HOURS TO UTILITY COMPANIES PRIOR TO STARTING ANY EXCAVATION AS FOLLOWS:

   KANSAS ONE-CALL 1-800-344-7233
   or 687-2470 (LOCAL WICHITA)

   THE CONTRACTOR MUST NOTIFY THE FOLLOWING IN CASE OF AN EMERGENCY:

SOUTHWESTERN BELL TELEPHONE COMPANY	1-800-734-7590
CABLEVISION	263-2061
KG&E (GAS & ELECTRIC)	383-8600
CITY OF WICHITA WATER & SEWER MAINTENANCE	268-4908
ARKLA GAS COMPANY	946-0096
CITY OF BEL AIRE (Terry Dreiling)	744-2451

4. RUBBLE FROM THE REMOVAL OF MISCELLANEOUS STRUCTURES AND EXCESS EXCAVATION WHICH IS TO BE WASTED SHALL BE DISPOSED OF ON SITES TO BE PROVIDED BY THE CONTRACTOR. THESE SITES SHALL BE APPROVED BY THE ENGINEER AS TO SUITABILITY, APPEARANCE AND SITE LOCATION. LOCATIONS THAT, IN THE OPINION OF THE ENGINEER, WILL LEAVE AN UNSIGHTLY APPEARANCE WILL NOT BE APPROVED. ALL DIPOSAL SITES MUST BE APPROVED BY THE KANSAS DEPARTMENT OF HEALTH AND ENVIRONMENT. MATERIAL EITHER STOCKPILED OR DISPOSED OF IN A FLOOD PLAIN WOULD REQUIRE A KANSAS STATE BOARD OF AGRICULTURE PERMIT. ANY MATERIAL DUMPED IN WATERS OF THE UNITED STATES OR WETLANDS IS SUBJECT TO U.S CORPS OF ENGINEERS PERMITTING REGULATIONS. ANY MATERIAL BURIED OR STOCKPILED BEYOND APPROVED CONSTRUCTION LIMITS WOULD REQUIRE ADDITIONAL ARCHAEOLOGICAL INVESTIGATIONS UNLESS BURIED IN A PREVIOUSLY APPROVED BORROW LOCATION.

5. COST OF EXCAVATION, HAULING, AND DUMPING OF EXCESS EXCAVATION SHALL BE SUBSIDIARY TO THE PROJECT.

6. A PORTION OF EXCESS EXCAVATED MATERIAL SHALL BE MOUNDED AROUND MANHOLES WHICH EXTEND MORE THAN ONE (1) FOOT ABOVE THE EXISTING GROUND. SUCH MOUNDS SHALL BE CONSTRUCTED WITH A SIX (6) FOOT DIAMETER FLAT TOP WITH 4 TO 1 SIDE SLOPES DOWN TO THE ORIGINAL GROUND. THE ELEVATION OF THE FLAT TOP OF THE MOUND SHALL BE 0.4 FOOT BELOW THE TOP OF THE MANHOLE.

7. ALL STUBS AND PLUGGED PIPES SHALL BE LOCATED WITH GREEN PLASTIC TAPE IN THE SAME MANNER AS RISERS.

8. PRIOR TO LAYING SEWER LINES USING EXISTING STUBS IN EXISTING MANHOLES, THE CONTRACTOR SHALL EXPOSE AND VERIFY THE ELEVATION, GRADE AND ALIGNMENT OF EXISTING STUBS AND NOTIFY THE ENGINEER OF ANY DEVIATION FROM THE PLAN. WHERE CONNECTION TO AN EXISTING MANHOLE THAT DOES NOT HAVE AN EXISTING STUB OR THE STUB IS UNUSABLE DUE TO ELEVATION GRADE OR ALIGNMENT, THE CONTRACTOR SHALL RESHAPE THE EXISTING MANHOLE INVERT TO PROVIDE SMOOTH FLOW. THE COST OF RESHAPING EXISTING MANHOLE INVERTS IS INCIDENTAL TO THE PROJECT.

9. TREES AND SHRUBS IN PUBLIC RIGHT-OF-WAY WHICH ARE IN DIRECT CONFLICT WITH PROPOSED NEW CONSTRUCTION SHALL BE REMOVED BY THE CONTRACTOR WITH THE ENGINEER'S APPROVAL. TREES AND SHRUBS WHICH ARE NOT IN DIRECT CONFLICT WITH PROPOSLD NEW CONSTRUCTION SHALL BE SAVED AND PROTECTED FROM DAMAGE.

10. ALL DISTURBED AREAS TO BE SEEDED WITH RYE GRASS AT A RATE OF 200LBS./ ACRE WITHIN 10 DAYS OF CONSTRUCTION. CONTRACTOR TO PREPARE GROUND PER CITY SPEC. COST IS SUBSIDIARY TO SITE PREPARATION AND RESTORATION.

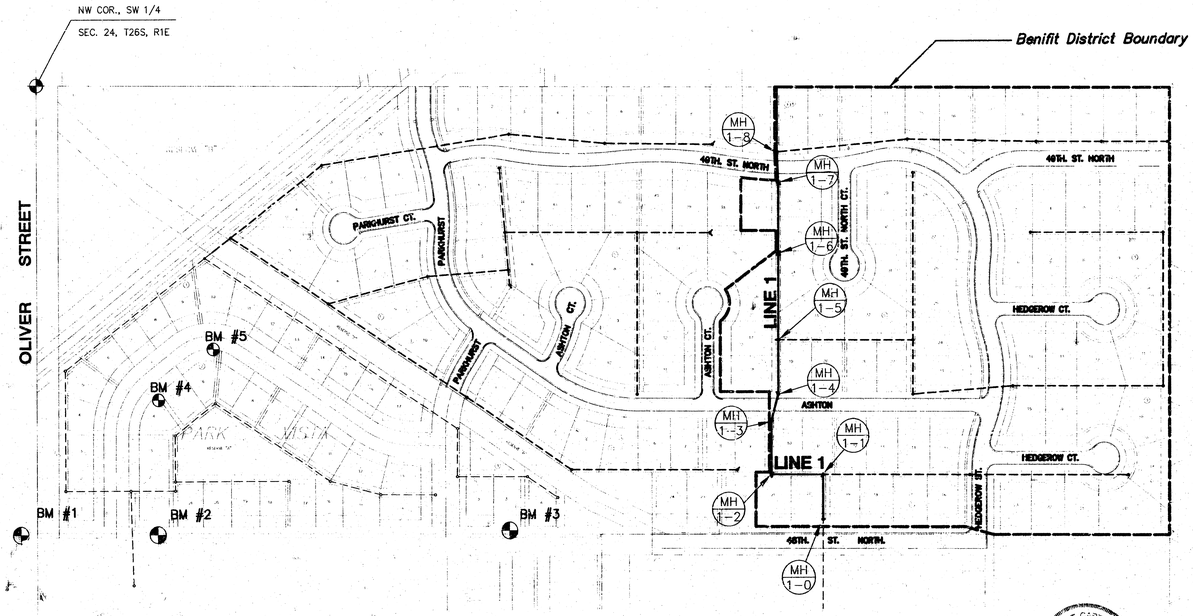

LOCATION MAP

APPROVED AS NOTED
BY CITY ENGINEER OF WICHITA

SANITARY SEWERS VRH 8/27/99

STORM SEWERS_____

DRIVEWAY APPROACHED_____

WATER MAINS_____

PAVING_____

NOTE TO CONTRACTOR

INSPECTION AND TESTING FOR THIS PROJECT IS TO BE PROVIDED BY A LICENSED CONSULTING ENGINEERING FIRM UNDER CONTRACT WITH THE OWNER/DEVELOPER. SAID INSPECTION TO BE IN ACCORDANCE WITH THE CITY OF WICHITA STANDARD CONSTRUCTION ENGINEERING PRACTICES AND CERTIFIED BY A LICENSED PROFESSIONAL ENGINEER. NO WORK SHALL BE PERFORMED IN DEDICATED EASEMENTS OR THE PUBLIC RIGHT-OF-WAY BY THE CONTRACTOR WITHOUT SUCH INSPECTION NOR SHALL ANY WORK BE COMMENCED IN DEDICATED EASEMENTS OR PUBLIC RIGHT-OF-WAY WITHOUT WRITTEN AUTHORIZATION BY THE CITY ENGINEER.

BENCHMARKS

BM #1 "D" CUT TOP OF CURB N. END W. SIDE OLIVER DR. (OLIVER & 48TH ST. NO.) ELEV.=1406.235

BM #2 TOP OF CURB N. END W. SIDE GLENDALE (GLENDALE & 48TH ST. NO.) ELEV.=1410.695

BM #3 "D" CUT TOP OF CURB N. END E. SIDE BATTIN ST. (BATTIN & 48TH ST. NO.) ELEV.=1418.135

BM #4 "D" CUT NW COR. INLET W. SIDE ASHTON @ N.E. COR. LOT 3, BLK. 1, PARKVISTA ADD. ELEV.=1409.78

BM #5 "D"CUT ON TOP OF CURB N. SIDE ASHTON @ @ S.E. COR. LOT 10, BLK. 1, PARKVISTA ADD. ELEV.=1411.76

INDEX TO DRAWINGS

SHEET NO.	DESCRIPTION
1	TITLE SHEET
2	MANHOLE DETAILS
3	LINE 1
4	FINAL PLAT

N

SCALE 1"=150'

JEFFREY T. CARTWRIGHT LICENSED 14371 PROFESSIONAL ENGINEER 8-26-99

CITY OF WICHITA
PRIVATE PROJECT NO. 934PPS (607861)

MID-KANSAS ENGINEERING
CONSULTANTS, INC.
411 N. WEBB ROAD
WICHITA, KS. 67206
316-684-9600

PARK VISTA THIRD ADDITION PHASE 2
PROJECT NAME

SANITARY SEWER PLANS
SHEET TITLE

JTC	GJR	JTC
DESIGN BY:	DRAWN BY:	CHECKED BY:
AUG. 1999	97113	1 / 4
DATE	JOB NO.	SHEET/OF

12-3-3-4

I:\BELAIRE\97113\SAN\PHASE2\PHASE2T.DWG Thu Aug 26 14:27:41 1999

SEWER APPURTENANCES DETAILS

ADOPTED AS STANDARD DESIGN BY CITY OF WICHITA

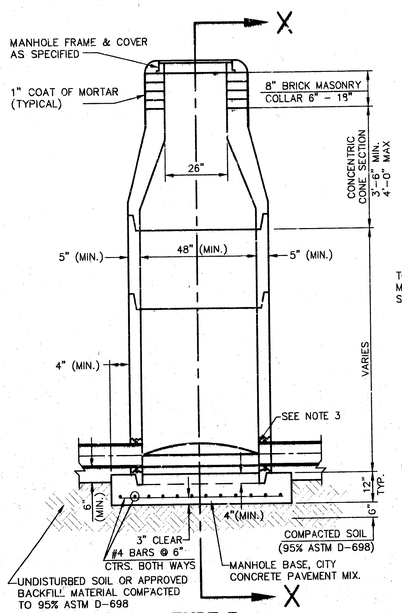

TYPE P
STANDARD MANHCLE

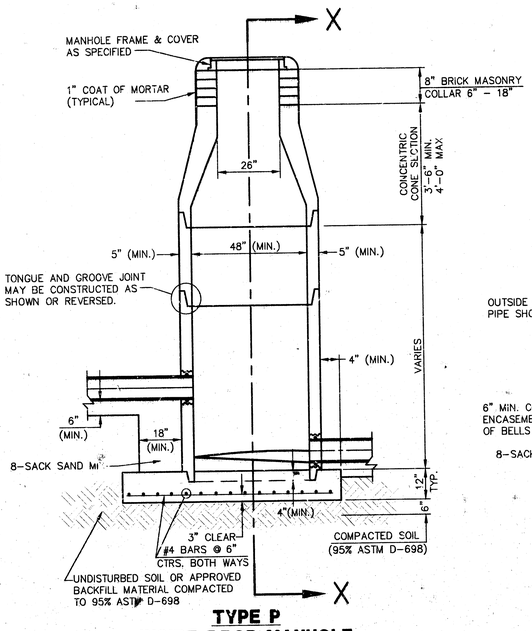

TYPE P
INSIDE DROP MANHOLE

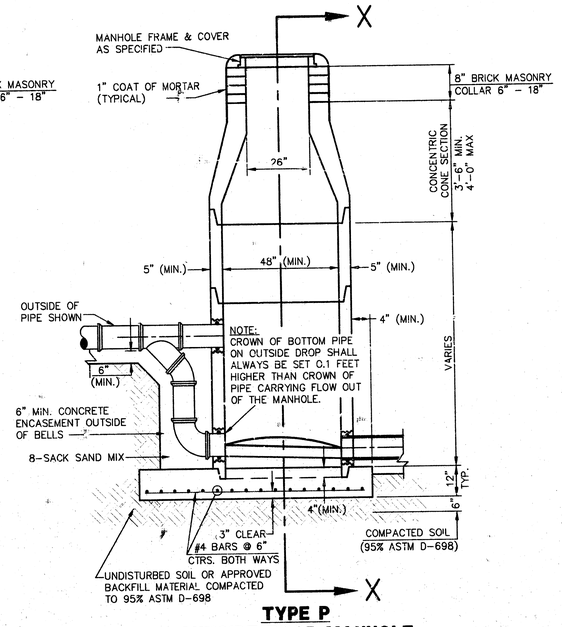

TYPE P
OUTSIDE DROP MANHOLE

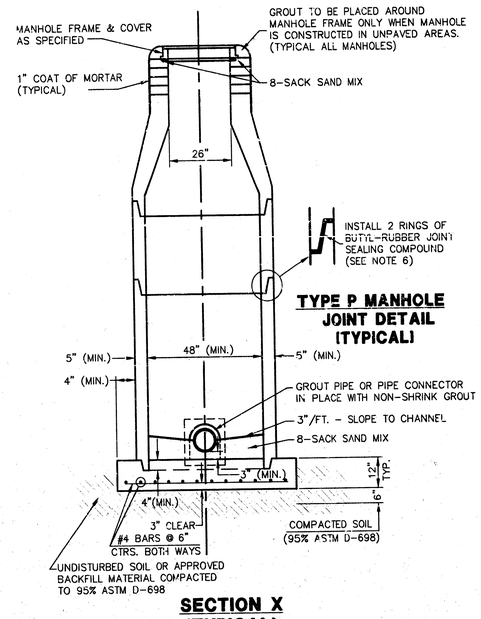

TYPE P MANHOLE
JOINT DETAIL
(TYPICAL)

SECTION X
(TYPICAL)

GENERAL NOTES - PRECAST MANHOLE NOTES

1. ALL PRECAST CONCRETE MANHOLE SECTIONS SHALL CONFORM TO THE LATEST REVISIONS OF A.S.T.M. C478 AS MODIFIED BY THE SPECIFICATIONS.
2. NON-SHRINK GROUT SHALL BE NON-METALLIC TYPE.
3. APPROVED FLEXIBLE WATERSTOP GASKETS SHALL BE INSTALLED TO JOIN THE SEWER TO THE MANHOLE WALL WHEN A.B.S. COMPOSITE PIPE OR P.V.C. PIPE IS USED. FOR OTHER TYPES OF PIPE THE SEWER SHALL BE GROUTED IN PLACE WITH NON-SHRINK GROUT. THE SEWER PIPE SHALL BE SUPPORTED WITH CONCRETE ENCASEMENT A MINIMUM OF 3 FEET FROM THE MANHOLE WALL AND TO THE FIRST JOINT FOR V.C.P. SUCH THAT THE JOINT REMAINS FLEXIBLE.
4. ALL INSIDE SURFACES OF THE CONCRETE MANHOLE WHICH WOULD BE EXPOSED TO SEWER GAS SHALL BE COATED WITH 2 COATS SEMEC SERIES 66 HI-BUILD EPOXOLINE, DRY THICKNESS OF 8 MILS (MIN.).
5. EXTERIOR MANHOLE WALLS SHALL BE COATED WITH 1 COAT MOBILARMA 633 BITUMINUS COATING.
6. JOINT SEALING COMPOUND SHALL BE KENT SEAL NO. 2 OR APPROVED EQUAL.
7. PRECAST MANHOLES SHALL BE SET AT LEAST 4 INCHES INTO THE MANHOLE BASE.
8. TOP OF MANHOLE FLOOR SLAB SHALL BE AT LEAST 3 INCHES BELOW THE FLOW LINE OF THE OUTLET PIPE TO INSURE SUFFICIENT MINIMUM THICKNESS OF SHAPED INVERT.
9. LIFTING HOLES SHALL BE FILLED WITH NON-SHRINK GROUT AND THE INTERIOR SURFACE COATED AS SPECIFIED.
10. MORTAR USED IN MASONRY CONSTRUCTION SHALL CONTAIN 8 SACKS OF CEMENT PER CUBIC YARD. CONCRETE USED IN MANHOLE BASES SHALL CONFORM TO THE REQUIREMENTS OF CONCRETE FOR CONCRETE PAVEMENT CONSTRUCTION AS SPECIFIED IN THE CITY STANDARD PAVING SPECIFICATIONS USING CITY CONCRETE PAVEMENT MIX WITHOUT AIR ENTRAINING ADMIXTURE. MORTAR SHALL BE PLACED AROUND THE MANHOLE RING AS SHOWN ON THE DRAWINGS WHEN MANHOLES ARE CONSTRUCTED IN UNPAVED AREAS. MANHOLES CONSTRUCTED WHERE PIPE SIZES ARE SMALLER THAN 24" SHALL HAVE AN INSIDE DIAMETER OF 4'. MANHOLES CONSTRUCTED WHERE PIPE SIZES ARE 24" OR LARGER SHALL HAVE AN INSIDE DIAMETER OF 5'. COMPLETED MANHOLE SHALL BE WITHOUT LEAKS AND WATER TIGHT.
11. REINFORCING STEEL SHALL BE INSTALLED IN THE MANHOLE BASES AND SHALL CONSIST OF NO. 4 BARS PLACED ON 6" CENTERS IN BOTH DIRECTIONS. THE MANHOLE BASE REINFORCEMENT SHALL BE PLACED AT LEAST 3" ABOVE THE BOTTOM OF THE MANHOLE BASE. ALL COSTS FOR FURNISHING AND INSTALLING REINFORCING STEEL SHALL BE INCLUDED IN THE UNIT PRICE BID FOR THE MANHOLE.
12. OPENINGS SHALL BE CUT INTO THE MANHOLE WALL WHEN OUTSIDE DROPS ARE CONSTRUCTED ON EXISTING MANHOLES. SUCH OPENINGS CUT INTO EXISTING MANHOLES SHALL BE AS SMALL AS PRACTICAL TO FACILITATE INSTALLING AND GROUTING THE NEW PIPE IN PLACE. WATERSTOP GASKETS SHALL BE USED WITH P.V.C. AND A.B.S. COMPOSITE PIPE. THE NEW PIPE SHALL BE GROUTED INTO THE OPENING USING AN APPROVED NONSHRINK GROUT FOR THE FULL MANHOLE WALL THICKNESS. THE EXTERIOR OF THE COMPLETED CONNECTION SHALL BE SEALED WITH AN APPROVED BITUMINOUS COATING SUCH THAT THE CONNECTION WILL BE WATER TIGHT. FLOOR OF MANHOLE SHALL BE MODIFIED TO FORM NEW FLOW CHANNEL FOR THE NEW CONNECTION AS INDICATED BY THE DRAWING. THIS WORK, INCLUDING MODIFICATION OF MANHOLE FLOOR, SHALL BE PAID FOR AT THE UNIT PRICE BID FOR OUTSIDE DROP STACK CONSTRUCTED ON EXISTING MANHOLE.
13. THE FLOORS OF ALL MANHOLES SHALL BE SHAPED WITH FLOW CHANNELS SUCH THAT THE MANHOLES WILL BE SELF CLEANING AND FREE OF AREAS WHERE SOLIDS COULD BE DEPOSITED AS SEWAGE FLOWS THROUGH THE MANHOLE FROM ALL INLET PIPES TO THE OUTLET PIPE. FLOW CHANNELS SHALL BE FORMED TO MATCH THE BOTTOM HALVES OF THE INFLOWING PIPES AND THE OUTFLOWING PIPE AS SHOWN BY THE DRAWINGS EXCEPT FOR INSIDE DROP MANHOLES. FLOW CHANNELS FOR INSIDE DROP MANHOLES SHALL BE CONSTRUCTED AS INDICATED BY THE DRAWING. MANHOLE FLOORS SHALL HAVE SLOPES OF 3 INCHES PER FOOT IN THE AREAS OUTSIDE OF THE FLOW CHANNELS SLOPED TOWARD THE FLOW CHANNELS. PIPES LAID THROUGH MANHOLES SHALL HAVE THE TOP HALF REMOVED TO NEAT LINES FOR THE FULL INSIDE DIAMETER OF THE MANHOLE. MANHOLE FLOORS SHALL THEN BE SHAPED AROUND THE BOTTOM HALF OF THE PIPE WHICH FORMS THE FLOW CHANNEL.
14. PIPES INSTALLED WITHIN THE EXCAVATION MADE FOR THE MANHOLE SHALL BE CRADLED WITH CONCRETE TO THE LIMITS OF THE MANHOLE EXCAVATION. WHEN CLAY PIPE IS USED, THE CRADLE SHALL EXTEND TO THE FIRST JOINT OUTSIDE THE MANHOLE. THE CRADLE SHALL BE TERMINATED AT THE CLAY PIPE JOINT IN A MANNER WHICH WILL MAINTAIN THE FLEXIBILITY OF THE JOINT. COST OF CRADLE WITHIN MANHOLE EXCAVATION OR TO CLAY PIPE JOINTS ADJACENT TO MANHOLE SHALL BE INCLUDED IN THE UNIT PRICE BID FOR THE MANHOLE.
15. MANHOLE COVER CASTINGS AND MANHOLE FRAME CASTINGS SHALL CONFORM TO THE REQUIREMENTS AS INDICATED IN THE STANDARD SPECIFICATIONS AND AS SHOWN IN THE STANDARD DETAIL DRAWING.
16. THE VERTICAL DROP IN INSIDE DROP MANHOLES SHALL NOT EXCEED 2' FOR INFLOWING PIPES. THE CROWNS OF INFLOWING PIPES SHALL NEVER BE SET LOWER THAN THE CROWN OF THE OUTFLOWING PIPE.
17. STANDARD MANHOLES AND STANDARD INSIDE DROP MANHOLES SHALL BE BID AS STANDARD MANHOLES FOR THE TYPE AND DIAMETER INDICATED. OUTSIDE DROP MANHOLES SHALL BE BID AS STANDARD OUTSIDE DROP MANHOLES FOR THE TYPE AND DIAMETER INDICATED. ALL MANHOLE DIAMETERS WILL BE 4' UNLESS INDICATED OTHERWISE.
18. A BRICK MASONRY COLLAR SHALL BE INSTALLED BETWEEN THE CAST IRON FRAME AND THE CONCENTRIC CONE. THE COLLAR WILL HAVE 8" WALLS AND A VERTICAL HEIGHT OF 6" MINIMUM AND 18" MAXIMUM. A 1" COAT OF MORTAR WILL BE PLASTERED ON THE OUTSIDE OF THE COLLAR.

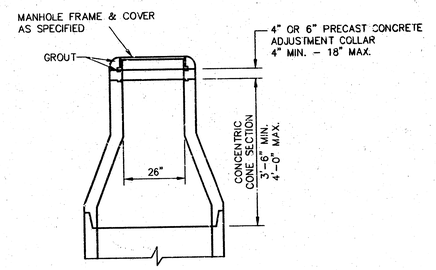

ALTERNATE CONSTRUCTION
IN UNPAVED AREAS

REVISED: 6-12-86

MANHOLE DETAILS

CITY OF BEL AIRE, KANSAS

Design	Checked by	Checked by	Page 2 of 4
Drawn by M.K.E.C.	Date	Date AUG 1999	Job No. 97113

I:\BELLAIRE\97113\SAN\PHASE2\PHASE2D1.DWG Thu Aug 26 14:26:51 1999

PARK VISTA THIRD ADDITION
PHASE II SAN. SEWER LATERAL
LINE 1

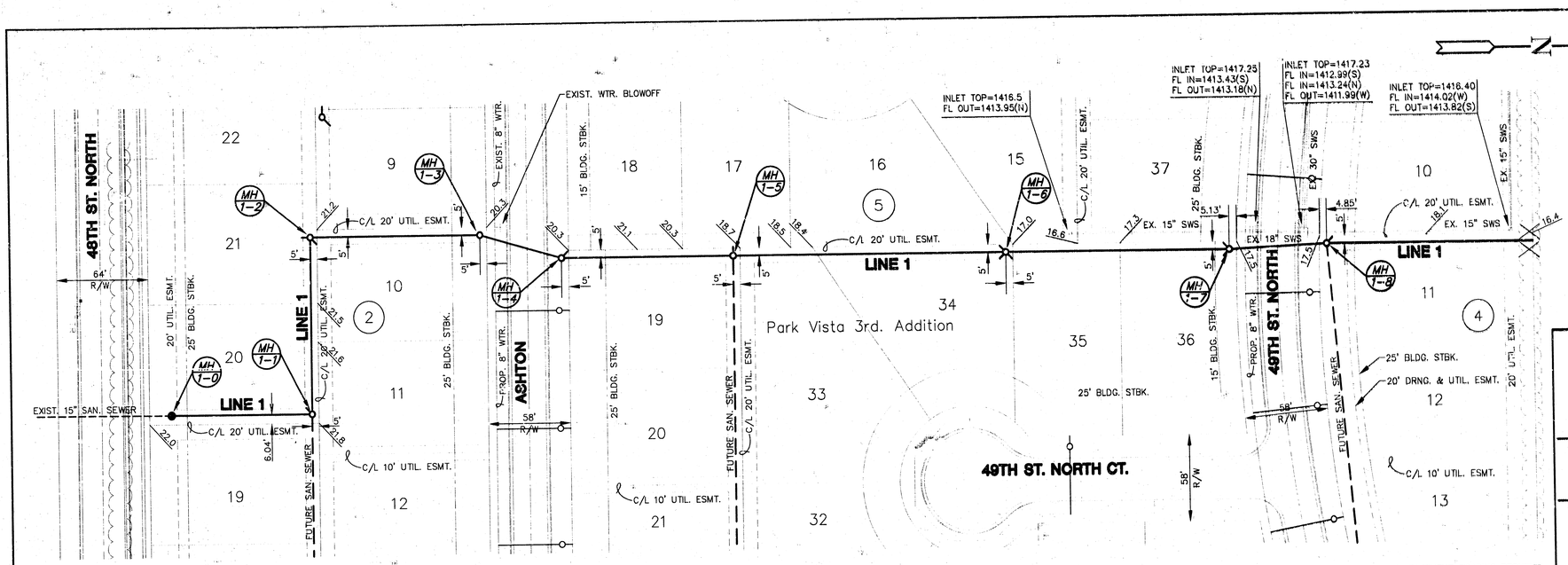

NOTE: EASEMENT GRADING REQUIRED MH 1-0 THRU MH 1-3
FOR INFORMATION ONLY:
CUT=
FILL=

NOTE: NO EASEMENT GRADING REQUIRED MH 1-3 THRU MH 1-4

NOTE: EASEMENT GRADING REQUIRED MH 1-4 THRU MH 1-7
FOR INFORMATION ONLY:
CUT=
FILL=

NOTE: NO EASEMENT GRADING REQUIRED MH 1-7 THRU MH 1-8

NOTE: EASEMENT GRADING REQUIRED MH 1-8 THRU STA 10+76.96
FOR INFORMATION ONLY:
CUT=
FILL=

EASEMENT GRADING DETAIL

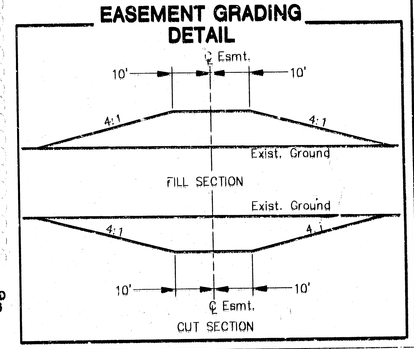

PLAN - LINE 1

Scale: Horz. 1"=40'

PROFILE - LINE 1

Scale: Horz. 1"=40'
Scale: Vert. 1"=5'

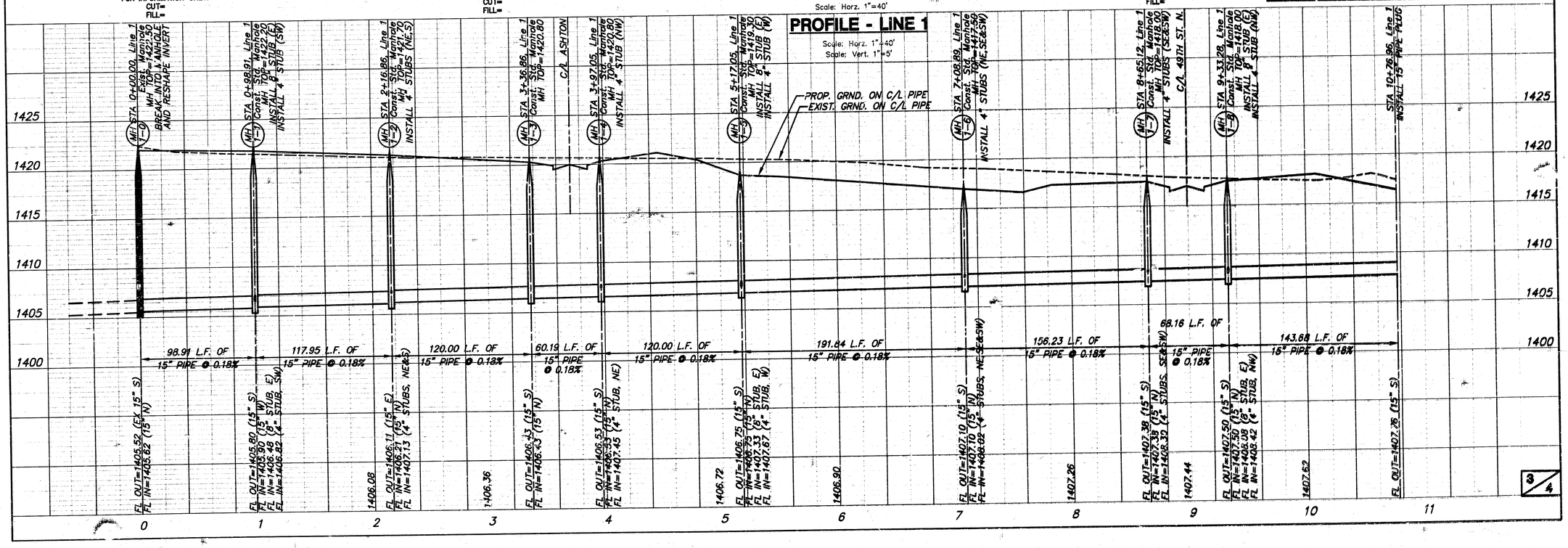

3/4

I:\BELAIRE\97413\SAN\PHASE2\PHASE2B1.DWG Thu Aug 26 14:28:49 1999

PC 88-7

FINAL PLAT OF
PARK VISTA THIRD ADDITION
AN ADDITION TO BEL AIRE, SEDGWICK COUNTY, KANSAS

LIBRARY COPY
SEDGWICK COUNTY, KANSAS
REGISTER OF DEEDS

BENCHMARKS

BM #1 "D" CUT TOP OF CURB N. END W. SIDE OLIVER DR. (OLIVER & 48TH ST. NO.) ELEV.=1406.235

BM #2 TOP OF CURB N. END W. SIDE GLENDALE (GLENDALE & 48TH ST. NO.) ELEV.=1410.695

BM #3 "D" CUT TOP OF CURB N. END E. SIDE BATTIN ST. (BATTIN & 48TH ST. NO.) ELEV.=1418.135

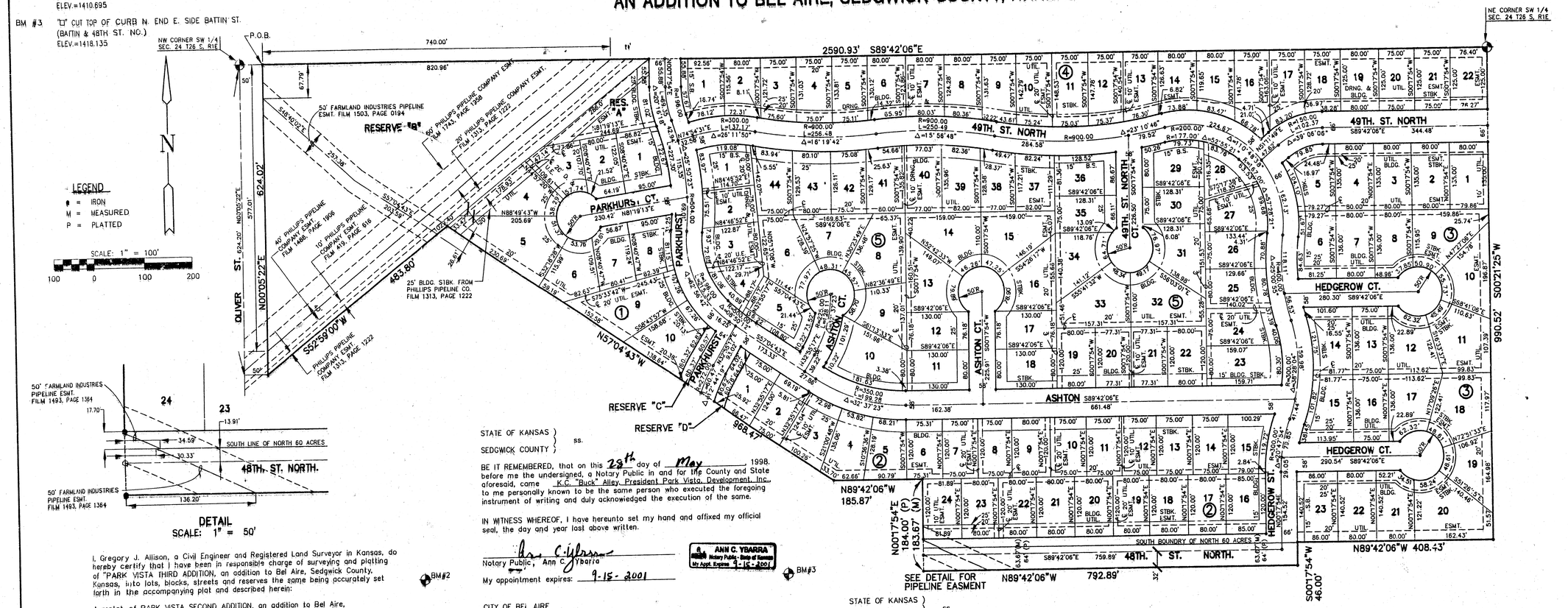

DETAIL
SCALE: 1" = 50'

I, Gregory J. Allison, a Civil Engineer and Registered Land Surveyor in Kansas, do hereby certify that I have been in responsible charge of surveying and platting of "PARK VISTA THIRD ADDITION, an addition to Bel Aire, Sedgwick County, Kansas, into lots, blocks, streets and reserves the same being accurately set forth in the accompanying plat and described herein:

A replat of PARK VISTA SECOND ADDITION, an addition to Bel Aire, Sedgwick County, Kansas.

I hereby certify that the details of this plat are correct to the best of my knowledge and belief this 28th day of May, 1998

Gregory J. Allison, P.E., R.L.S. #1257
Mid-Kansas Engineering Consultants, Inc.
411 North Webb Road
Wichita, KS 67206

GREGORY J. ALLISON LICENSED LS-1257 KANSAS LAND SURVEYOR

Know all men by these presents that we the undersigned property owners of the land as above set forth in the Civil Engineer's and Registered Land Surveyor's Certificate, have caused the same to be surveyed and platted into lots, blocks, streets and reserves the same to be known as "PARK VISTA THIRD ADDITION", an addition to Bel Aire, Sedgwick County, Kansas. The streets are dedicated to and for the use of the public. Easements for the construction and maintenance of public utilities and drainage are hereby granted to the public. Reserves A and B are platted for landscaping, open space, sidewalks, irrigation, and for the construction and maintenance of public drainage. Reserves C and D are platted for landscaping, irrigation, sidewalks, monuments, and open space. Reserves A, C, and D shall be owned and maintained by the homeowners association. Reserve B is owned by the public and maintained by the appropriate governing body.

PARK VISTA DEVELOPMENT, INC.

K.C. "Buck" Alley, President

STATE OF KANSAS } ss.
SEDGWICK COUNTY }

BE IT REMEMBERED, that on this 28th day of May, 1998. before me the undersigned, a Notary Public in and for the County and State aforesaid, came K.C. "Buck" Alley, President Park Vista Development, Inc., to me personally known to be the same person who executed the foregoing instrument of writing and duly acknowledged the execution of the same.

IN WITNESS WHEREOF, I have hereunto set my hand and affixed my official seal, the day and year last above written.

Notary Public, Ann C. Ybarra

ANN C. YBARRA Notary Public - State of Kansas My Appt. Expires 9-15-2001

My appointment expires: 9-15-2001

CITY OF BEL AIRE

Lyle Ackerman, Mayor

STATE OF KANSAS } ss.
SEDGWICK COUNTY }

BE IT REMEMBERED, that on this 12th day of June, 1998. before me the undersigned, a Notary Public in and for the County and State aforesaid, came Lyle Ackerman, Mayor City of Bel Aire, to me personally known to be the same person who executed the foregoing instrument of writing and duly acknowledged the execution of the same.

IN WITNESS WHEREOF, I have hereunto set my hand and affixed my official seal, the day and year last above written.

Notary Public, Sherryl L. Cutler

SHERRYL L. CUTLER NOTARY PUBLIC STATE OF KANSAS My Appt. Expires 10-10-98

My appointment expires: 10-10-98

We, Chisholm Trail State Bank, holders of a mortgage on the above described property, do hereby consent to the plat of "PARK VISTA THIRD ADDITION".

Chisholm Trail State Bank

Elmer S. Peters, Jr., Executive Vice President

STATE OF KANSAS } ss.
SEDGWICK COUNTY }

BE IT REMEMBERED, that on this 28th day of May, 1998. before me the undersigned, a Notary Public in and for the County and State aforesaid, came Elmer S. Peters, Jr., Executive Vice President for Chisholm Trail State Bank, to me personally known to be the same person who executed the foregoing instrument of writing and duly acknowledged the execution of the same.

IN WITNESS WHEREOF, I have hereunto set my hand and affixed my official seal, the day and year last above written.

Notary Public Ann C. Ybarra

ANN C. YBARRA Notary Public - State of Kansas My Appt. Expires 9-15-2001

My appointment expires: 9-15-2001

This plat of "PARK VISTA THIRD ADDITION", has been submitted to and approved by the Bel Aire Planning Commission, Bel Aire, Kansas.

Dated this 11th day of May, 1998.

BEL AIRE PLANNING COMMISSION

David Mallhagen, Chairman

Betty L. Martine, Secretary

1701786

This plat approved and all dedications shown thereon, if any, accepted by the City Council of the City of Bel Aire, Kansas, this 2nd day of June, 1998.

Lyle Ackerman, Mayor

CITY OF BEL AIRE KANSAS CITY OF THE FUTURE WITH RESPECT FOR ITS PAST

Sherryl L. Cutler, City Clerk

Entered on transfer record this 24th day of June, 1998.

Thomas Alford, County Clerk

STATE OF KANSAS } ss:
SEDGWICK COUNTY }

This is to certify that this instrument was filed for record in the Register of Deeds office this 24th day of June, 1998.

Bill Meek, Register of Deeds

Linda Kizzire, Deputy Register of Deeds

PC 88-7
98 03 03 04

20.00 CK

I:\BELAIRE\971.2\PROPVIHALT\971123_4.DWG Thu May 28 08:02:15 1998