CITY OF WICHITA, KANSAS
MICHAEL E. LINDEBAK, P.E., CITY ENGINEER

SANITARY SEWER AND STORM SEWER IMPROVEMENTS

IN

PINEHURST APARTMENTS
PRIVATE PROJECT NO. 834PPS
INDEX CODE 607861

LEGAL DESCRIPTION

Lot 2, Block 1, The Ritz, an addition to the City of Wichita, Sedgwick County, Kansas

GENERAL NOTES

1. The Contractor is specifically cautioned that the location and/or elevation of existing utilities as shown on these Construction Drawings are based upon records of the various utility companies. This information is not to be relied upon as being exact or complete. It shall be the responsibility of the respective Contractor to notify ONE-CALL at (316) 687-2470, a minimum of 48 hours in advance of any excavation to request the exact field locations of the existing underground utilities. It shall be the responsibility of the respective Contractor to relocate all existing utilities which conflict with the proposed improvements as shown on the Construction Drawings.

2. The Contractor must notify the following in case of an emergency:

Cablevision	(316) 262-4270 or (316) 263-2061
KGE – Gas	(316) 263-7511
KGE – Electric	(316) 264-1141
Peoples Natural Gas	(316) 942-8350 or (316) 263-8161
Southwestern Bell Telephone Co.	1-(316) 571-2611
City of Wichita Water Department	(316) 268-4908
City of Wichita Sewer Maintenance	(316) 268-4071

3. City of Wichita Benchmark:

   Brass Cap set in Concrete
   Approximately 139' East of Southeast Corner of Teal Cove 2nd Addition, and approximately 51' North of Centerline of East 37th Street North.

   Elevation: 187.63 (City of Wichita Datum)

4. Preliminary Surveys: Savoy, Ruggles & Bohm

5. Trench excavation and backfill shall be mechanically tamped and tested. Compaction requirements shall be in accordance with the Sitework Specifications.

6. Cost of barricades, signs and all items necessary for safe and efficient movement of traffic shall be considered subsidiary to the construction of the pavement and utilities.

7. The Contractor shall use extreme caution in the area of existing trees which are to remain, existing manholes, power poles, fences, pavement and utilities, and shall be responsible for any damages.

8. It will be the Contractor's responsibility to inform the Engineer of any control points including street centerline and lot corners that may be destroyed during construction so that these points may be offset. The cost of resetting points that have not been offset will be paid for by the Contractor. Requests for offsets must be made 48 hours in advance.

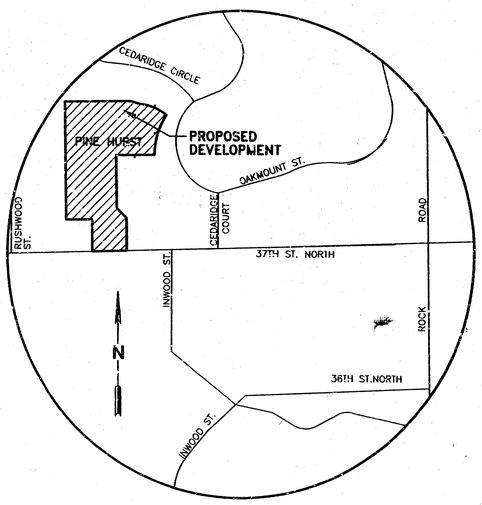

VICINITY MAP

SHEET INDEX

		NO.
	COVER SHEET	1 of 12
Private Construction	SANITARY PLAN	2 of 12
	SANITARY PROFILES	3 of 12
	SANITARY PROFILES	4 of 12
Private Construction	STORM SEWER PLAN	5 of 12
	STORM SEWER PROFILES	6 of 12
	DOUBLE CURB INLET DETAIL	7 of 12
	STANDARD TYPE "P" MANHOLE DETAIL	8 of 12
	MANHOLE COVER & FRAME DETAIL	9 of 12
	STANDARD TYPE 1-A CURB INLET DETAIL	10 of 12
	DROP INLET DETAIL	11 of 12
	SHALLOW TYPE "P" MANHOLE DETAIL	12 of 12

Utility Contractors

San. Sewer
Booked
6-8-99
P-77
R.D.L.

STORM SEWER
BOOKED
6-22-99
D-424
MCG

Project inspected by: BAUGHMAN COMPANY, P.A.
ASBUILT 12/98 -Chg., BAUGHMAN

ENGINEER'S CERTIFICATE

I hereby certify that these Construction Drawings were prepared by me or under my direct supervision and that I am a Registered Professional Engineer under the laws of the State of Kansas. These Construction Drawings meet the requirements of subdivision approval and the City Engineer's Office design requirements as they apply to construction at the time of this certificate.

Terry A. Brown — 9/3/98
Date

TERRY A. BROWN LICENSED 14851 KANSAS PROFESSIONAL ENGINEER

APPROVED AS NOTED
BY CITY ENGINEER OF WICHITA

Sanitary Sewers	VRH 9/14/98
Storm Sewers	VRH 9/14/98
Driveways/Approaches	
Water Mains	
Paving	

NOTE TO CONTRACTORS

PUBLIC PROPERTY:
Inspection and testing for the Waterline is to be provided by a Licensed Consulting Engineering Firm under contract with the records of the Owner/Developer. Said inspection to be in accordance with the City of Wichita standard construction engineering practices and certified by a Licensed Professional Engineer. No work shall be performed in dedicated easements or public right-of-way by the Contractor without such inspection nor shall any work be commenced without written authorization by the City Engineer. All construction and materials shall comply with the City of Wichita Specifications and Standards (on file and available in the City Engineer's Office.

ROSS ENGINEERING, INC.
ENGINEERS • PLANNERS • SURVEYORS
645 M Street
Suite 201
Lincoln, NE 68508
Phone 402-474-7677
FAX 402-474-7913

No.	Revisions	Rev. Date

Scale NONE
Drawn MF
Checked TRB
Approved TRB

Job# 98E-50
File 98801CS1
Date 7/14/98
Plate 3.22/98

PINEHURST APARTMENTS
E 37TH STREET N. & ROCK ROAD
WICHITA KANSAS

COVER SHEET

Sheet No.
1
OF
12

J:\ACAD\PW98E05\98805cs1.dwg Wed Sep 02 17:12:48 1998 SAK

P — BUILD 8" PVC SANITARY SEWER PIPE

NO.	STATION		SIZE	LENGTH
P1	0+00.00 to 2+63.42	Run A	8"	263.42 LF
P2	2+63.42 to 3+88.35	RUN A	8"	124.93 LF
P3	3+88.35 to 5+27.53	RUN A	8"	139.18 LF
P4	5+27.53 to 6+08.50	RUN A	8"	80.97 LF
P5	0+00.00 to 2+51.76	RUN B	8"	251.76 LF
P6	2+51.76 to 5+56.17	RUN B	8"	304.41 LF
P7	0+00.00 to 1+46.64	RUN C	8"	146.64 LF
P8	1+46.64 to 3+22.51	RUN C	8"	175.87 LF
P9	3+22.51 to 5+44.18	RUN C	8"	221.67 LF
P10	5+44.18 to 7+22.49	RUN C	8"	178.31 LF
P11	7+22.49 to 7+76.66	RUN C	8"	54.17 LF

R — REMOVE EXISTING SANITARY PLUG

NO.	STATION	FL
R1	2+63.42 Run A	(8"):174.66± (Cotractor to Verify in Field)

M — BUILD SANITARY SEWER MANHOLE

NO.	STATION	VF
M1	2+63.42 Run A 0+00.00 Run B	13.72
M2	3+88.35 Run A	8.98
M3	5+27.53 Run A	8.11
M4	6+08.50 Run A	7.16
M5	2+51.76 Run B 0+00.00 Run C	13.30
M6	5+56.17 Run B	5.04
M7	1+46.64 Run C	7.29
M8	3+22.51 Run C	10.61
M9	5+44.18 Run C	8.23
M10	7+22.49 Run C	7.22
M11	7+76.66 Run C	7.37
M12	0+0.00 Run A	12.53

SCHEDULE OF APPROX. QUANTITIES

DESCRIPTION	UNITS	QUANT.
8" PVC Sanitary Sewer Pipe, SDR 35	LF	2,330
Standard Sanitary Sewer Manhole	Ea	12
Standard Sanitary Sewer Manhole	VF	112
Remove 8" Sanitary Plug	Ea	1
Foundation Material (in Place)	C.Y.	129

Note: All Sanitary Sewer to be Private Construction

City of Wichita Benchmark:

Brass Cap set in Concrete
Approximately 139' East of Southeast Corner of Teal Cove 2nd Addition, and approximately 51' North of Centerline of East 37th Street North.

Elevation: 187.63 (City of Wichita Datum)

T — TAP EXISTING SANITARY SEWER

NO.	STATION	FL
T1	2+63.42 Run A	(8"):174.66± (Cotractor to Verify in Field)

S — BUILD 6" SANITARY SERVICE STUB-OUT

IDENTIFIER	Station at Main or Manhole	FL(8") at Main or MH	FL(6") at Main or MH	FL(6") at Cap	Length	Slope
S1	6+08.50 'A'	183.42	186.42	186.83	10.0	0.04016
S2	6+08.50 'A'	183.42	186.42	186.65	10.0	0.02296
S3	1+46.64 'C'	177.57	178.57	179.41	10.0	0.08365
S4	5+56.17 'B'	176.74	N/A	177.57	10.0	0.08337
S5	3+22.51 'C'	178.28	181.28	182.23	10.0	0.09457
S6	5+44.18 'C'	179.17	182.17	182.50	10.0	0.03319
S7	7+76.65 'C'	180.10	183.10	183.23	10.0	0.01324
S8	7+76.66 'C'	180.10	183.10	183.50	10.0	0.03892

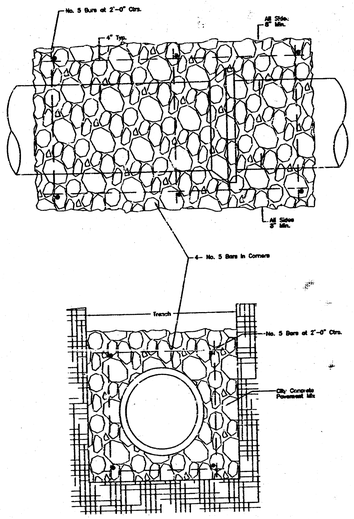

DETAIL OF REINFORCED CONCRETE ENCASEMENT
PER CITY OF WICHITA SPECIFICATIONS

ROSS Engineering, Inc.
ENGINEERS • PLANNERS • SURVEYORS
645 N. Street
Suite 201
Lincoln, NE 68508
Phone 402-474-1677
FAX 402-474-1708

No.	Revisions	Dev. Date

Scale 1"=40'
Drawn GED
Checked TJB
Approved TJB

Job# 98B-50
Archive
File
Date 7/13/98
Plot Date 9/3/98

PINEHURST APARTMENTS
E. 37TH STREET N. & ROCK ROAD
WICHITA KANSAS

SANITARY PLAN

TERRY A. BROWN
LICENSED
14851
KANSAS
PROFESSIONAL ENGINEER

Sheet No. 2 OF 12

I:\PROJECTS\98APTS\DRAWINGS\11.dwn Thu Sep 03 08:32:27 1998 SAK

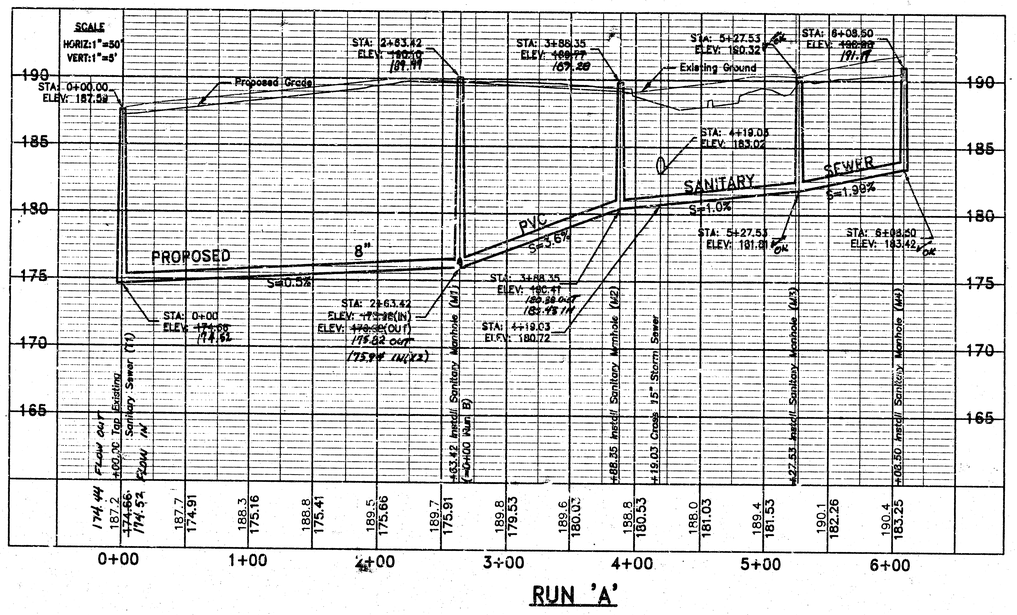

RUN 'A'

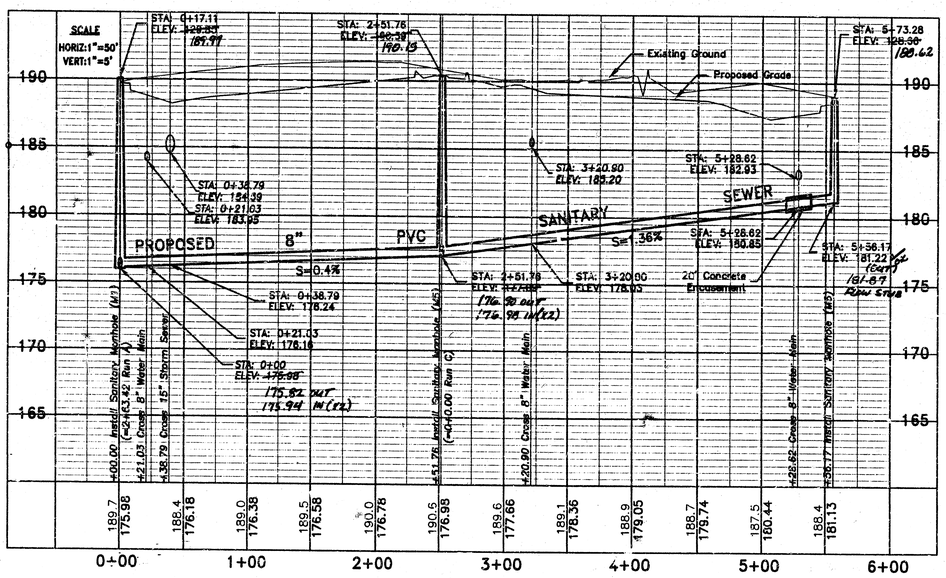

RUN 'B'

AS BUILT 12/98 DJ
BAUGHMAN COMPANY, P.A.

ROSS Engineering, Inc.

ENGINEERS • PLANNERS • SURVEYORS

645 M Street
Suite 201
Lincoln, NE 68508
Phone 402-474-7617
FAX 402-474-7618

No.	Revisions	Rev. Date
	AS BUILT	12/98

Scale 1"=50'
Drawn LEF
Checked RPO
Approved TAB

Job# 988-SD
File 98805SA
Date 7/16/98
Pdate 9/3/98

PINEHURST APARTMENTS
E. 37TH STREET N. & ROCK ROAD
WICHITA KANSAS

SANITARY PROFILE

TERRY A. BROWN
LICENSED
14851
KANSAS
PROFESSIONAL ENGINEER

Sheet No.
3
OF
12

J:\ADCADD\P\98805\98805SA.dwg Thu Sep 03 08:56:28 1998 SAK

SANITARY PROFILE

Sheet No. 4 OF 12

PINEHURST APARTMENTS
E. 37TH STREET N. & ROCK ROAD
WICHITA KANSAS

Job #	98E-50
File	98E05SA
Date	7/16/98
Paddle	9/3/98

Scale	1"=50'
Drawn	LEF
Checked	RPC
Approved	RPC

No.	Revisions	Rev. Date
	ASBUILT	12/98

Ross Engineering, Inc.
645 M Street
Lincoln, NE 68508
Phone 402-474-7677
FAX 402-474-7678

PLANNERS • SURVEYORS • ENGINEERS

ASBUILT 12/98 by BAUGHMAN COMPANY, P.A.

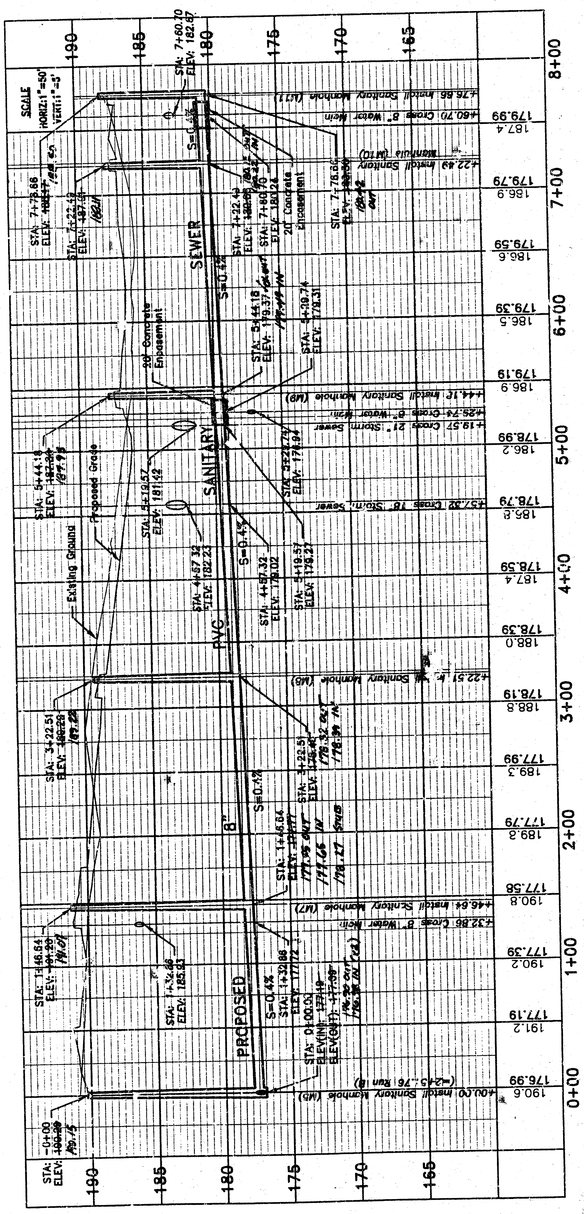
SCALE
HORIZ.: 1"=50'
VERT.: 1"=5'
SEWER
SANITARY
PROPOSED
PVC
8"
Existing Ground
Proposed Grade
Sanitary Manhole (MH)
Storm Sewer
Water Main
Run 'A'
Run 'B'
Run 'C'
Run 'D'
Run 'E'
Run 'F'
Run 'G'
Run 'H'
Run 'I'
Run 'J'
Run 'K'
Run 'L'
Run 'M'
Run 'N'
Run 'O'
Run 'P'
Run 'Q'
Run 'R'
Run 'S'
Run 'T'
Run 'U'
Run 'V'
Run 'W'
Run 'X'
Run 'Y'
Run 'Z'
Run 'AA'
Run 'BB'
Run 'CC'
Run 'DD'
Run 'EE'
Run 'FF'
Run 'GG'
Run 'HH'
Run 'II'
Run 'JJ'
Run 'KK'
Run 'LL'
Run 'MM'
Run 'NN'
Run 'OO'
Run 'PP'
Run 'QQ'
Run 'RR'
Run 'SS'
Run 'TT'
Run 'UU'
Run 'VV'
Run 'WW'
Run 'XX'
Run 'YY'
Run 'ZZ'
Run 'AAA'
Run 'BBB'
Run 'CCC'
Run 'DDD'
Run 'EEE'
Run 'FFF'
Run 'GGG'
Run 'HHH'
Run 'III'
Run 'JJJ'
Run 'KKK'
Run 'LLL'
Run 'MMM'
Run 'NNN'
Run 'OOO'
Run 'PPP'
Run 'QQQ'
Run 'RRR'
Run 'SSS'
Run 'TTT'
Run 'UUU'
Run 'VVV'
Run 'WWW'
Run 'XXX'
Run 'YYY'
Run 'ZZZ'
Run 'AAAA'
Run 'BBBB'
Run 'CCCC'
Run 'DDDD'
Run 'EEEE'
Run 'FFFF'
Run 'GGGG'
Run 'HHHH'
Run 'IIII'
Run 'JJJJ'
Run 'KKKK'
Run 'LLLL'
Run 'MMMM'
Run 'NNNN'
Run 'OOOO'
Run 'PPPP'
Run 'QQQQ'
Run 'RRRR'
Run 'SSSS'
Run 'TTTT'
Run 'UUUU'
Run 'VVVV'
Run 'WWWW'
Run 'XXXX'
Run 'YYYY'
Run 'ZZZZ'
Run 'AAAAA'
Run 'BBBBB'
Run 'CCCCC'
Run 'DDDDD'
Run 'EEEEE'
Run 'FFFFF'
Run 'GGGGG'
Run 'HHHHH'
Run 'IIIII'
Run 'JJJJJ'
Run 'KKKKK'
Run 'LLLLL'
Run 'MMMMM'
Run 'NNNNN'
Run 'OOOOO'
Run 'PPPPP'
Run 'QQQQQ'
Run 'RRRRR'
Run 'SSSSS'
Run 'TTTTT'
Run 'UUUUU'
Run 'VVVVV'
Run 'WWWWW'
Run 'XXXXX'
Run 'YYYYY'
Run 'ZZZZZ'
Run 'AAAAAA'
Run 'BBBBBB'
Run 'CCCCCC'
Run 'DDDDDD'
Run 'EEEEEE'
Run 'FFFFFF'
Run 'GGGGGG'
Run 'HHHHHH'
Run 'IIIIII'
Run 'JJJJJJ'
Run 'KKKKKK'
Run 'LLLLLL'
Run 'MMMMMM'
Run 'NNNNNN'
Run 'OOOOOO'
Run 'PPPPPP'
Run 'QQQQQQ'
Run 'RRRRRR'
Run 'SSSSSS'
Run 'TTTTTT'
Run 'UUUUUU'
Run 'VVVVVV'
Run 'WWWWWW'
Run 'XXXXXX'
Run 'YYYYYY'
Run 'ZZZZZZ'
Run 'AAAAAAA'
Run 'BBBBBBB'
Run 'CCCCCCC'
Run 'DDDDDDD'
Run 'EEEEEEE'
Run 'FFFFFFF'
Run 'GGGGGGG'
Run 'HHHHHHH'
Run 'IIIIIII'
Run 'JJJJJJJ'
Run 'KKKKKKK'
Run 'LLLLLLL'
Run 'MMMMMMM'
Run 'NNNNNNN'
Run 'OOOOOOO'
Run 'PPPPPPP'
Run 'QQQQQQQ'
Run 'RRRRRRR'
Run 'SSSSSSS'
Run 'TTTTTTT'
Run 'UUUUUUU'
Run 'VVVVVVV'
Run 'WWWWWWW'
Run 'XXXXXXX'
Run 'YYYYYYY'
Run 'ZZZZZZZ'
Run 'AAAAAAAA'
Run 'BBBBBBBB'
Run 'CCCCCCCC'
Run 'DDDDDDDD'
Run 'EEEEEEEE'
Run 'FFFFFFFF'
Run 'GGGGGGGG'
Run 'HHHHHHHH'
Run 'IIIIIIII'
Run 'JJJJJJJJ'
Run 'KKKKKKKK'
Run 'LLLLLLLL'
Run 'MMMMMMMM'
Run 'NNNNNNNN'
Run 'OOOOOOOO'
Run 'PPPPPPPP'
Run 'QQQQQQQQ'
Run 'RRRRRRRR'
Run 'SSSSSSSS'
Run 'TTTTTTTT'
Run 'UUUUUUUU'
Run 'VVVVVVVV'
Run 'WWWWWWWW'
Run 'XXXXXXXX'
Run 'YYYYYYYY'
Run 'ZZZZZZZZ'
Run 'AAAAAAAAA'
Run 'BBBBBBBBB'
Run 'CCCCCCCCC'
Run 'DDDDDDDDD'
Run 'EEEEEEEEE'
Run 'FFFFFFFFF'
Run 'GGGGGGGGG'
Run 'HHHHHHHHH'
Run 'IIIIIIIII'
Run 'JJJJJJJJJ'
Run 'KKKKKKKKK'
Run 'LLLLLLLLL'
Run 'MMMMMMMMM'
Run 'NNNNNNNNN'
Run 'OOOOOOOOO'
Run 'PPPPPPPPP'
Run 'QQQQQQQQQ'
Run 'RRRRRRRRR'
Run 'SSSSSSSSS'
Run 'TTTTTTTTT'
Run 'UUUUUUUUU'
Run 'VVVVVVVVV'
Run 'WWWWWWWWW'
Run 'XXXXXXXXX'
Run 'YYYYYYYYY'
Run 'ZZZZZZZZZ'
Run 'AAAAAAAAAA'
Run 'BBBBBBBBBB'
Run 'CCCCCCCCCC'
Run 'DDDDDDDDDD'
Run 'EEEEEEEEEE'
Run 'FFFFFFFFFF'
Run 'GGGGGGGGGG'
Run 'HHHHHHHHHH'
Run 'IIIIIIIIII'
Run 'JJJJJJJJJJ'
Run 'KKKKKKKKKK'
Run 'LLLLLLLLLL'
Run 'MMMMMMMMMM'
Run 'NNNNNNNNNN'
Run 'OOOOOOOOOO'
Run 'PPPPPPPPPP'
Run 'QQQQQQQQQQ'
Run 'RRRRRRRRRR'
Run 'SSSSSSSSSS'
Run 'TTTTTTTTTT'
Run 'UUUUUUUUUU'
Run 'VVVVVVVVVV'
Run 'WWWWWWWWWW'
Run 'XXXXXXXXXX'
Run 'YYYYYYYYYY'
Run 'ZZZZZZZZZZ'
Run 'AAAAAAAAAAA'
Run 'BBBBBBBBBBB'
Run 'CCCCCCCCCCC'
Run 'DDDDDDDDDDD'
Run 'EEEEEEEEEEE'
Run 'FFFFFFFFFFF'
Run 'GGGGGGGGGGG'
Run 'HHHHHHHHHHH'
Run 'IIIIIIIIIII'
Run 'JJJJJJJJJJJ'
Run 'KKKKKKKKKKK'
Run 'LLLLLLLLLLL'
Run 'MMMMMMMMMMM'
Run 'NNNNNNNNNNN'
Run 'OOOOOOOOOOO'
Run 'PPPPPPPPPPP'
Run 'QQQQQQQQQQQ'
Run 'RRRRRRRRRRR'
Run 'SSSSSSSSSSS'
Run 'TTTTTTTTTTT'
Run 'UUUUUUUUUUU'
Run 'VVVVVVVVVVV'
Run 'WWWWWWWWWWW'
Run 'XXXXXXXXXXX'
Run 'YYYYYYYYYYY'
Run 'ZZZZZZZZZZZ'
Run 'AAAAAAAAAAAA'
Run 'BBBBBBBBBBBB'
Run 'CCCCCCCCCCCC'
Run 'DDDDDDDDDDDD'
Run 'EEEEEEEEEEEE'
Run 'FFFFFFFFFFFF'
Run 'GGGGGGGGGGGG'
Run 'HHHHHHHHHHHH'
Run 'IIIIIIIIIIII'
Run 'JJJJJJJJJJJJ'
Run 'KKKKKKKKKKKK'
Run 'LLLLLLLLLLLL'
Run 'MMMMMMMMMMMM'
Run 'NNNNNNNNNNNN'
Run 'OOOOOOOOOOOO'
Run 'PPPPPPPPPPPP'
Run 'QQQQQQQQQQQQ'
Run 'RRRRRRRRRRRR'
Run 'SSSSSSSSSSSS'
Run 'TTTTTTTTTTTT'
Run 'UUUUUUUUUUUU'
Run 'VVVVVVVVVVVV'
Run 'WWWWWWWWWWWW'
Run 'XXXXXXXXXXXX'
Run 'YYYYYYYYYYYY'
Run 'ZZZZZZZZZZZZ'
Run 'AAAAAAAAAAAAA'
Run 'BBBBBBBBBBBBB'
Run 'CCCCCCCCCCCCC'
Run 'DDDDDDDDDDDDD'
Run 'EEEEEEEEEEEEE'
Run 'FFFFFFFFFFFFF'
Run 'GGGGGGGGGGGGG'
Run 'HHHHHHHHHHHHH'
Run 'IIIIIIIIIIIII'
Run 'JJJJJJJJJJJJJ'
Run 'KKKKKKKKKKKKK'
Run 'LLLLLLLLLLLLL'
Run 'MMMMMMMMMMMMM'
Run 'NNNNNNNNNNNNN'
Run 'OOOOOOOOOOOOO'
Run 'PPPPPPPPPPPPP'
Run 'QQQQQQQQQQQQQ'
Run 'RRRRRRRRRRRRR'
Run 'SSSSSSSSSSSSS'
Run 'TTTTTTTTTTTTT'
Run 'UUUUUUUUUUUUU'
Run 'VVVVVVVVVVVVV'
Run 'WWWWWWWWWWWWW'
Run 'XXXXXXXXXXXXX'
Run 'YYYYYYYYYYYYY'
Run 'ZZZZZZZZZZZZZ'
Run 'AAAAAAAAAAAAAA'
Run 'BBBBBBBBBBBBBB'
Run 'CCCCCCCCCCCCCC'
Run 'DDDDDDDDDDDDDD'
Run 'EEEEEEEEEEEEEE'
Run 'FFFFFFFFFFFFFF'
Run 'GGGGGGGGGGGGGG'
Run 'HHHHHHHHHHHHHH'
Run 'IIIIIIIIIIIIII'
Run 'JJJJJJJJJJJJJJ'
Run 'KKKKKKKKKKKKKK'
Run 'LLLLLLLLLLLLLL'
Run 'MMMMMMMMMMMMMM'
Run 'NNNNNNNNNNNNNN'
Run 'OOOOOOOOOOOOOO'
Run 'PPPPPPPPPPPPPP'
Run 'QQQQQQQQQQQQQQ'
Run 'RRRRRRRRRRRRRR'
Run 'SSSSSSSSSSSSSS'
Run 'TTTTTTTTTTTTTT'
Run 'UUUUUUUUUUUUUU'
Run 'VVVVVVVVVVVVVV'
Run 'WWWWWWWWWWWWWW'
Run 'XXXXXXXXXXXXXX'
Run 'YYYYYYYYYYYYYY'
Run 'ZZZZZZZZZZZZZZ'
Run 'AAAAAAAAAAAAAAA'
Run 'BBBBBBBBBBBBBBB'
Run 'CCCCCCCCCCCCCCC'
Run 'DDDDDDDDDDDDDDD'
Run 'EEEEEEEEEEEEEEE'
Run 'FFFFFFFFFFFFFFF'
Run 'GGGGGGGGGGGGGGG'
Run 'HHHHHHHHHHHHHHH'
Run 'IIIIIIIIIIIIIII'
Run 'JJJJJJJJJJJJJJJ'
Run 'KKKKKKKKKKKKKKK'
Run 'LLLLLLLLLLLLLLL'
Run 'MMMMMMMMMMMMMMM'
Run 'NNNNNNNNNNNNNNN'
Run 'OOOOOOOOOOOOOOO'
Run 'PPPPPPPPPPPPPPP'
Run 'QQQQQQQQQQQQQQQ'
Run 'RRRRRRRRRRRRRRR'
Run 'SSSSSSSSSSSSSSS'
Run 'TTTTTTTTTTTTTTT'
Run 'UUUUUUUUUUUUUUU'
Run 'VVVVVVVVVVVVVVV'
Run 'WWWWWWWWWWWWWWW'
Run 'XXXXXXXXXXXXXXX'
Run 'YYYYYYYYYYYYYYY'
Run 'ZZZZZZZZZZZZZZZ'
Run 'AAAAAAAAAAAAAAAA'
Run 'BBBBBBBBBBBBBBBB'
Run 'CCCCCCCCCCCCCCCC'
Run 'DDDDDDDDDDDDDDDD'
Run 'EEEEEEEEEEEEEEEE'
Run 'FFFFFFFFFFFFFFFF'
Run 'GGGGGGGGGGGGGGGG'
Run 'HHHHHHHHHHHHHHHH'
Run 'IIIIIIIIIIIIIIII'
Run 'JJJJJJJJJJJJJJJJ'
Run 'KKKKKKKKKKKKKKKK'
Run 'LLLLLLLLLLLLLLLL'
Run 'MMMMMMMMMMMMMMMM'
Run 'NNNNNNNNNNNNNNNN'
Run 'OOOOOOOOOOOOOOOO'
Run 'PPPPPPPPPPPPPPPP'
Run 'QQQQQQQQQQQQQQQQ'
Run 'RRRRRRRRRRRRRRRR'
Run 'SSSSSSSSSSSSSSSS'
Run 'TTTTTTTTTTTTTTTT'
Run 'UUUUUUUUUUUUUUUU'
Run 'VVVVVVVVVVVVVVVV'
Run 'WWWWWWWWWWWWWWWW'
Run 'XXXXXXXXXXXXXXXX'
Run 'YYYYYYYYYYYYYYYY'
Run 'ZZZZZZZZZZZZZZZZ'
Run 'AAAAAAAAAAAAAAAAA'
Run 'BBBBBBBBBBBBBBBBB'
Run 'CCCCCCCCCCCCCCCCC'
Run 'DDDDDDDDDDDDDDDDD'
Run 'EEEEEEEEEEEEEEEEE'
Run 'FFFFFFFFFFFFFFFFF'
Run 'GGGGGGGGGGGGGGGGG'
Run 'HHHHHHHHHHHHHHHHH'
Run 'IIIIIIIIIIIIIIIII'
Run 'JJJJJJJJJJJJJJJJJ'
Run 'KKKKKKKKKKKKKKKKK'
Run 'LLLLLLLLLLLLLLLLL'
Run 'MMMMMMMMMMMMMMMMM'
Run 'NNNNNNNNNNNNNNNNN'
Run 'OOOOOOOOOOOOOOOOO'
Run 'PPPPPPPPPPPPPPPPP'
Run 'QQQQQQQQQQQQQQQQQ'
Run 'RRRRRRRRRRRRRRRRR'
Run 'SSSSSSSSSSSSSSSSS'
Run 'TTTTTTTTTTTTTTTTT'
Run 'UUUUUUUUUUUUUUUUU'
Run 'VVVVVVVVVVVVVVVVV'
Run 'WWWWWWWWWWWWWWWWW'
Run 'XXXXXXXXXXXXXXXXX'
Run 'YYYYYYYYYYYYYYYYY'
Run 'ZZZZZZZZZZZZZZZZZ'
Run 'AAAAAAAAAAAAAAAAAA'
Run 'BBBBBBBBBBBBBBBBBB'
Run 'CCCCCCCCCCCCCCCCCC'
Run 'DDDDDDDDDDDDDDDDDD'
Run 'EEEEEEEEEEEEEEEEEE'
Run 'FFFFFFFFFFFFFFFFFF'
Run 'GGGGGGGGGGGGGGGGGG'
Run 'HHHHHHHHHHHHHHHHHH'
Run 'IIIIIIIIIIIIIIIIII'
Run 'JJJJJJJJJJJJJJJJJJ'
Run 'KKKKKKKKKKKKKKKKKK'
Run 'LLLLLLLLLLLLLLLLLL'
Run 'MMMMMMMMMMMMMMMMMM'
Run 'NNNNNNNNNNNNNNNNNN'
Run 'OOOOOOOOOOOOOOOOOO'
Run 'PPPPPPPPPPPPPPPPPP'
Run 'QQQQQQQQQQQQQQQQQQ'
Run 'RRRRRRRRRRRRRRRRRR'
Run 'SSSSSSSSSSSSSSSSSS'
Run 'TTTTTTTTTTTTTTTTTT'
Run 'UUUUUUUUUUUUUUUUUU'
Run 'VVVVVVVVVVVVVVVVVV'
Run 'WWWWWWWWWWWWWWWWWW'
Run 'XXXXXXXXXXXXXXXXXX'
Run 'YYYYYYYYYYYYYYYYYY'
Run 'ZZZZZZZZZZZZZZZZZZ'
Run 'AAAAAAAAAAAAAAAAAAA'
Run 'BBBBBBBBBBBBBBBBBBB'
Run 'CCCCCCCCCCCCCCCCCCC'
Run 'DDDDDDDDDDDDDDDDDDD'
Run 'EEEEEEEEEEEEEEEEEEE'
Run 'FFFFFFFFFFFFFFFFFFF'
Run 'GGGGGGGGGGGGGGGGGGG'
Run 'HHHHHHHHHHHHHHHHHHH'
Run 'IIIIIIIIIIIIIIIIIII'
Run 'JJJJJJJJJJJJJJJJJJJ'
Run 'KKKKKKKKKKKKKKKKKKK'
Run 'LLLLLLLLLLLLLLLLLLL'
Run 'MMMMMMMMMMMMMMMMMMM'
Run 'NNNNNNNNNNNNNNNNNNN'
Run 'OOOOOOOOOOOOOOOOOOO'
Run 'PPPPPPPPPPPPPPPPPPP'
Run 'QQQQQQQQQQQQQQQQQQQ'
Run 'RRRRRRRRRRRRRRRRRRR'
Run 'SSSSSSSSSSSSSSSSSSS'
Run 'TTTTTTTTTTTTTTTTTTT'
Run 'UUUUUUUUUUUUUUUUUUU'
Run 'VVVVVVVVVVVVVVVVVVV'
Run 'WWWWWWWWWWWWWWWWWWW'
Run 'XXXXXXXXXXXXXXXXXXX'
Run 'YYYYYYYYYYYYYYYYYYY'
Run 'ZZZZZZZZZZZZZZZZZZZ'
Run 'AAAAAAAAAAAAAAAAAAAA'
Run 'BBBBBBBBBBBBBBBBBBBB'
Run 'CCCCCCCCCCCCCCCCCCCC'
Run 'DDDDDDDDDDDDDDDDDDDD'
Run 'EEEEEEEEEEEEEEEEEEEE'
Run 'FFFFFFFFFFFFFFFFFFFF'
Run 'GGGGGGGGGGGGGGGGGGGG'
Run 'HHHHHHHHHHHHHHHHHHHH'
Run 'IIIIIIIIIIIIIIIIIIII'
Run 'JJJJJJJJJJJJJJJJJJJJ'
Run 'KKKKKKKKKKKKKKKKKKKK'
Run 'LLLLLLLLLLLLLLLLLLLL'
Run 'MMMMMMMMMMMMMMMMMMMM'
Run 'NNNNNNNNNNNNNNNNNNNN'
Run 'OOOOOOOOOOOOOOOOOOOO'
Run 'PPPPPPPPPPPPPPPPPPPP'
Run 'QQQQQQQQQQQQQQQQQQQQ'
Run 'RRRRRRRRRRRRRRRRRRRR'
Run 'SSSSSSSSSSSSSSSSSSSS'
Run 'TTTTTTTTTTTTTTTTTTTT'
Run 'UUUUUUUUUUUUUUUUUUUU'
Run 'VVVVVVVVVVVVVVVVVVVV'
Run 'WWWWWWWWWWWWWWWWWWWW'
Run 'XXXXXXXXXXXXXXXXXXXX'
Run 'YYYYYYYYYYYYYYYYYYYY'
Run 'ZZZZZZZZZZZZZZZZZZZZ'
Run 'AAAAAAAAAAAAAAAAAAAAA'
Run 'BBBBBBBBBBBBBBBBBBBBB'
Run 'CCCCCCCCCCCCCCCCCCCCC'
Run 'DDDDDDDDDDDDDDDDDDDDD'
Run 'EEEEEEEEEEEEEEEEEEEEE'
Run 'FFFFFFFFFFFFFFFFFFFFF'
Run 'GGGGGGGGGGGGGGGGGGGGG'
Run 'HHHHHHHHHHHHHHHHHHHHH'
Run 'IIIIIIIIIIIIIIIIIIIII'
Run 'JJJJJJJJJJJJJJJJJJJJJ'
Run 'KKKKKKKKKKKKKKKKKKKKK'
Run 'LLLLLLLLLLLLLLLLLLLLL'
Run 'MMMMMMMMMMMMMMMMMMMMM'
Run 'NNNNNNNNNNNNNNNNNNNNN'
Run 'OOOOOOOOOOOOOOOOOOOOO'
Run 'PPPPPPPPPPPPPPPPPPPPP'
Run 'QQQQQQQQQQQQQQQQQQQQQ'
Run 'RRRRRRRRRRRRRRRRRRRRR'
Run 'SSSSSSSSSSSSSSSSSSSSS'
Run 'TTTTTTTTTTTTTTTTTTTTT'
Run 'UUUUUUUUUUUUUUUUUUUUU'
Run 'VVVVVVVVVVVVVVVVVVVVV'
Run 'WWWWWWWWWWWWWWWWWWWWW'
Run 'XXXXXXXXXXXXXXXXXXXXX'
Run 'YYYYYYYYYYYYYYYYYYYYY'
Run 'ZZZZZZZZZZZZZZZZZZZZZ'
Run 'AAAAAAAAAAAAAAAAAAAAAA'
Run 'BBBBBBBBBBBBBBBBBBBBBB'
Run 'CCCCCCCCCCCCCCCCCCCCCC'
Run 'DDDDDDDDDDDDDDDDDDDDDD'
Run 'EEEEEEEEEEEEEEEEEEEEEE'
Run 'FFFFFFFFFFFFFFFFFFFFFF'
Run 'GGGGGGGGGGGGGGGGGGGGGG'
Run 'HHHHHHHHHHHHHHHHHHHHHH'
Run 'IIIIIIIIIIIIIIIIIIIIII'
Run 'JJJJJJJJJJJJJJJJJJJJJJ'
Run 'KKKKKKKKKKKKKKKKKKKKKK'
Run 'LLLLLLLLLLLLLLLLLLLLLL'
Run 'MMMMMMMMMMMMMMMMMMMMMM'
Run 'NNNNNNNNNNNNNNNNNNNNNN'
Run 'OOOOOOOOOOOOOOOOOOOOOO'
Run 'PPPPPPPPPPPPPPPPPPPPPP'
Run 'QQQQQQQQQQQQQQQQQQQQQQ'
Run 'RRRRRRRRRRRRRRRRRRRRRR'
Run 'SSSSSSSSSSSSSSSSSSSSSS'
Run 'TTTTTTTTTTTTTTTTTTTTTT'
Run 'UUUUUUUUUUUUUUUUUUUUUU'
Run 'VVVVVVVVVVVVVVVVVVVVVV'
Run 'WWWWWWWWWWWWWWWWWWWWWW'
Run 'XXXXXXXXXXXXXXXXXXXXXX'
Run 'YYYYYYYYYYYYYYYYYYYYYY'
Run 'ZZZZZZZZZZZZZZZZZZZZZZ'
Run 'AAAAAAAAAAAAAAAAAAAAAAA'
Run 'BBBBBBBBBBBBBBBBBBBBBBB'
Run 'CCCCCCCCCCCCCCCCCCCCCCC'
Run 'DDDDDDDDDDDDDDDDDDDDDDD'
Run 'EEEEEEEEEEEEEEEEEEEEEEE'
Run 'FFFFFFFFFFFFFFFFFFFFFFF'
Run 'GGGGGGGGGGGGGGGGGGGGGGG'
Run 'HHHHHHHHHHHHHHHHHHHHHHH'
Run 'IIIIIIIIIIIIIIIIIIIIIII'
Run 'JJJJJJJJJJJJJJJJJJJJJJJ'
Run 'KKKKKKKKKKKKKKKKKKKKKKK'
Run 'LLLLLLLLLLLLLLLLLLLLLLL'
Run 'MMMMMMMMMMMMMMMMMMMMMMM'
Run 'NNNNNNNNNNNNNNNNNNNNNNN'
Run 'OOOOOOOOOOOOOOOOOOOOOOO'
Run 'PPPPPPPPPPPPPPPPPPPPPPP'
Run 'QQQQQQQQQQQQQQQQQQQQQQQ'
Run 'RRRRRRRRRRRRRRRRRRRRRRR'
Run 'SSSSSSSSSSSSSSSSSSSSSSS'
Run 'TTTTTTTTTTTTTTTTTTTTTTT'
Run 'UUUUUUUUUUUUUUUUUUUUUUU'
Run 'VVVVVVVVVVVVVVVVVVVVVVV'
Run 'WWWWWWWWWWWWWWWWWWWWWWW'
Run 'XXXXXXXXXXXXXXXXXXXXXXX'
Run 'YYYYYYYYYYYYYYYYYYYYYYY'
Run 'ZZZZZZZZZZZZZZZZZZZZZZZ'
Run 'AAAAAAAAAAAAAAAAAAAAAAAA'
Run 'BBBBBBBBBBBBBBBBBBBBBBBB'
Run 'CCCCCCCCCCCCCCCCCCCCCCCC'
Run 'DDDDDDDDDDDDDDDDDDDDDDDD'
Run 'EEEEEEEEEEEEEEEEEEEEEEEE'
Run 'FFFFFFFFFFFFFFFFFFFFFFFF'
Run 'GGGGGGGGGGGGGGGGGGGGGGGG'
Run 'HHHHHHHHHHHHHHHHHHHHHHHH'
Run 'IIIIIIIIIIIIIIIIIIIIIIII'
Run 'JJJJJJJJJJJJJJJJJJJJJJJJ'
Run 'KKKKKKKKKKKKKKKKKKKKKKKK'
Run 'LLLLLLLLLLLLLLLLLLLLLLLL'
Run 'MMMMMMMMMMMMMMMMMMMMMMMM'
Run 'NNNNNNNNNNNNNNNNNNNNNNNN'
Run 'OOOOOOOOOOOOOOOOOOOOOOOO'
Run 'PPPPPPPPPPPPPPPPPPPPPPPP'
Run 'QQQQQQQQQQQQQQQQQQQQQQQQ'
Run 'RRRRRRRRRRRRRRRRRRRRRRRR'
Run 'SSSSSSSSSSSSSSSSSSSSSSSS'
Run 'TTTTTTTTTTTTTTTTTTTTTTTT'
Run 'UUUUUUUUUUUUUUUUUUUUUUUU'
Run 'VVVVVVVVVVVVVVVVVVVVVVVV'
Run 'WWWWWWWWWWWWWWWWWWWWWWWW'
Run 'XXXXXXXXXXXXXXXXXXXXXXXX'
Run 'YYYYYYYYYYYYYYYYYYYYYYYY'
Run 'ZZZZZZZZZZZZZZZZZZZZZZZZ'
Run 'AAAAAAAAAAAAAAAAAAAAAAAAA'
Run 'BBBBBBBBBBBBBBBBBBBBBBBBB'
Run 'CCCCCCCCCCCCCCCCCCCCCCCCC'
Run 'DDDDDDDDDDDDDDDDDDDDDDDDD'
Run 'EEEEEEEEEEEEEEEEEEEEEEEEE'
Run 'FFFFFFFFFFFFFFFFFFFFFFFFF'
Run 'GGGGGGGGGGGGGGGGGGGGGGGGG'
Run 'HHHHHHHHHHHHHHHHHHHHHHHHH'
Run 'IIIIIIIIIIIIIIIIIIIIIIIII'
Run 'JJJJJJJJJJJJJJJJJJJJJJJJJ'
Run 'KKKKKKKKKKKKKKKKKKKKKKKKK'
Run 'LLLLLLLLLLLLLLLLLLLLLLLLL'
Run 'MMMMMMMMMMMMMMMMMMMMMMMMM'
Run 'NNNNNNNNNNNNNNNNNNNNNNNNN'
Run 'OOOOOOOOOOOOOOOOOOOOOOOOO'
Run 'PPPPPPPPPPPPPPPPPPPPPPPPP'
Run 'QQQQQQQQQQQQQQQQQQQQQQQQQ'
Run 'RRRRRRRRRRRRRRRRRRRRRRRRR'
Run 'SSSSSSSSSSSSSSSSSSSSSSSSS'
Run 'TTTTTTTTTTTTTTTTTTTTTTTTT'
Run 'UUUUUUUUUUUUUUUUUUUUUUUUU'
Run 'VVVVVVVVVVVVVVVVVVVVVVVVV'
Run 'WWWWWWWWWWWWWWWWWWWWWWWWW'
Run 'XXXXXXXXXXXXXXXXXXXXXXXXX'
Run 'YYYYYYYYYYYYYYYYYYYYYYYYY'
Run 'ZZZZZZZZZZZZZZZZZZZZZZZZZ'
Run 'AAAAAAAAAAAAAAAAAAAAAAAAAA'
Run 'BBBBBBBBBBBBBBBBBBBBBBBBBB'
Run 'CCCCCCCCCCCCCCCCCCCCCCCCCC'
Run 'DDDDDDDDDDDDDDDDDDDDDDDDDD'
Run 'EEEEEEEEEEEEEEEEEEEEEEEEEE'
Run 'FFFFFFFFFFFFFFFFFFFFFFFFFF'
Run 'GGGGGGGGGGGGGGGGGGGGGGGGGG'
Run 'HHHHHHHHHHHHHHHHHHHHHHHHHH'
Run 'IIIIIIIIIIIIIIIIIIIIIIIIII'
Run 'JJJJJJJJJJJJJJJJJJJJJJJJJJ'
Run 'KKKKKKKKKKKKKKKKKKKKKKKKKK'
Run 'LLLLLLLLLLLLLLLLLLLLLLLLLL'
Run 'MMMMMMMMMMMMMMMMMMMMMMMMMM'
Run 'NNNNNNNNNNNNNNNNNNNNNNNNNN'
Run 'OOOOOOOOOOOOOOOOOOOOOOOOOO'
Run 'PPPPPPPPPPPPPPPPPPPPPPPPPP'
Run 'QQQQQQQQQQQQQQQQQQQQQQQQQQ'
Run 'RRRRRRRRRRRRRRRRRRRRRRRRRR'
Run 'SSSSSSSSSSSSSSSSSSSSSSSSSS'
Run 'TTTTTTTTTTTTTTTTTTTTTTTTTT'
Run 'UUUUUUUUUUUUUUUUUUUUUUUUUU'
Run 'VVVVVVVVVVVVVVVVVVVVVVVVVV'
Run 'WWWWWWWWWWWWWWWWWWWWWWWWWW'
Run 'XXXXXXXXXXXXXXXXXXXXXXXXXX'
Run 'YYYYYYYYYYYYYYYYYYYYYYYYYY'
Run 'ZZZZZZZZZZZZZZZZZZZZZZZZZZ'
Run 'AAAAAAAAAAAAAAAAAAAAAAAAAAA'
Run 'BBBBBBBBBBBBBBBBBBBBBBBBBBB'
Run 'CCCCCCCCCCCCCCCCCCCCCCCCCCC'
Run 'DDDDDDDDDDDDDDDDDDDDDDDDDDD'
Run 'EEEEEEEEEEEEEEEEEEEEEEEEEEE'
Run 'FFFFFFFFFFFFFFFFFFFFFFFFFFF'
Run 'GGGGGGGGGGGGGGGGGGGGGGGGGGG'
Run 'HHHHHHHHHHHHHHHHHHHHHHHHHHH'
Run 'IIIIIIIIIIIIIIIIIIIIIIIIIII'
Run 'JJJJJJJJJJJJJJJJJJJJJJJJJJJ'
Run 'KKKKKKKKKKKKKKKKKKKKKKKKKKK'
Run 'LLLLLLLLLLLLLLLLLLLLLLLLLLL'
Run 'MMMMMMMMMMMMMMMMMMMMMMMMMMM'
Run 'NNNNNNNNNNNNNNNNNNNNNNNNNNN'
Run 'OOOOOOOOOOOOOOOOOOOOOOOOOOO'
Run 'PPPPPPPPPPPPPPPPPPPPPPPPPPP'
Run 'QQQQQQQQQQQQQQQQQQQQQQQQQQQ'
Run 'RRRRRRRRRRRRRRRRRRRRRRRRRRR'
Run 'SSSSSSSSSSSSSSSSSSSSSSSSSSS'
Run 'TTTTTTTTTTTTTTTTTTTTTTTTTTT'
Run 'UUUUUUUUUUUUUUUUUUUUUUUUUUU'
Run 'VVVVVVVVVVVVVVVVVVVVVVVVVVV'
Run 'WWWWWWWWWWWWWWWWWWWWWWWWWWW'
Run 'XXXXXXXXXXXXXXXXXXXXXXXXXXX'
Run 'YYYYYYYYYYYYYYYYYYYYYYYYYYY'
Run 'ZZZZZZZZZZZZZZZZZZZZZZZZZZZ'
Run 'AAAAAAAAAAAAAAAAAAAAAAAAAAAA'
Run 'BBBBBBBBBBBBBBBBBBBBBBBBBBBB'
Run 'CCCCCCCCCCCCCCCCCCCCCCCCCCCC'
Run 'DDDDDDDDDDDDDDDDDDDDDDDDDDDD'
Run 'EEEEEEEEEEEEEEEEEEEEEEEEEEEE'
Run 'FFFFFFFFFFFFFFFFFFFFFFFFFFFF'
Run 'GGGGGGGGGGGGGGGGGGGGGGGGGGGG'
Run 'HHHHHHHHHHHHHHHHHHHHHHHHHHHH'
Run 'IIIIIIIIIIIIIIIIIIIIIIIIIIII'
Run 'JJJJJJJJJJJJJJJJJJJJJJJJJJJJ'
Run 'KKKKKKKKKKKKKKKKKKKKKKKKKKKK'
Run 'LLLLLLLLLLLLLLLLLLLLLLLLLLLL'
Run 'MMMMMMMMMMMMMMMMMMMMMMMMMMMM'
Run 'NNNNNNNNNNNNNNNNNNNNNNNNNNNN'
Run 'OOOOOOOOOOOOOOOOOOOOOOOOOOOO'
Run 'PPPPPPPPPPPPPPPPPPPPPPPPPPPP'
Run 'QQQQQQQQQQQQQQQQQQQQQQQQQQQQ'
Run 'RRRRRRRRRRRRRRRRRRRRRRRRRRRR'
Run 'SSSSSSSSSSSSSSSSSSSSSSSSSSSS'
Run 'TTTTTTTTTTTTTTTTTTTTTTTTTTTT'
Run 'UUUUUUUUUUUUUUUUUUUUUUUUUUUU'
Run 'VVVVVVVVVVVVVVVVVVVVVVVVVVVV'
Run 'WWWWWWWWWWWWWWWWWWWWWWWWWWWW'
Run 'XXXXXXXXXXXXXXXXXXXXXXXXXXXX'
Run 'YYYYYYYYYYYYYYYYYYYYYYYYYYYY'
Run 'ZZZZZZZZZZZZZZZZZZZZZZZZZZZZ'
Run 'AAAAAAAAAAAAAAAAAAAAAAAAAAAAA'
Run 'BBBBBBBBBBBBBBBBBBBBBBBBBBBBB'
Run 'CCCCCCCCCCCCCCCCCCCCCCCCCCCCC'
Run 'DDDDDDDDDDDDDDDDDDDDDDDDDDDDD'
Run 'EEEEEEEEEEEEEEEEEEEEEEEEEEEEE'
Run 'FFFFFFFFFFFFFFFFFFFFFFFFFFFFF'
Run 'GGGGGGGGGGGGGGGGGGGGGGGGGGGGG'
Run 'HHHHHHHHHHHHHHHHHHHHHHHHHHHHH'
Run 'IIIIIIIIIIIIIIIIIIIIIIIIIIIII'
Run 'JJJJJJJJJJJJJJJJJJJJJJJJJJJJJ'
Run 'KKKKKKKKKKKKKKKKKKKKKKKKKKKKK'
Run 'LLLLLLLLLLLLLLLLLLLLLLLLLLLLL'
Run 'MMMMMMMMMMMMMMMMMMMMMMMMMMMMM'
Run 'NNNNNNNNNNNNNNNNNNNNNNNNNNNNN'
Run 'O

T1 TAP EXISTING STORM SEWER STRUCTURE (Public Construction)

NO.	STATION/OFFSET	DESCRIPTION	TC/RIM	FL.
T1	0+00 Run A	17' Curb Inlet	TC: 183.82	FL(30"):171.54 FL(36"):171.02

G22 BUILD STORM SEWER STRUCTURE (Private Construction)

NO.	STATION/RUN	DESCRIPTION	TC/RIM	FL.
G1	2+55.07/Run C	Standard Type "1-A" Curb Inlet	TC:188.40	FL(18"):183.52 FL(15"):183.77
G2	0+00.00/Run C	Top Existing Structure Reconstruct Existing Grate Inlet to Combination Curb & Grate Inlet	Rim:187.22	FL(15"):182.37± (Contractor to Verify in Field) FL(18"):182.10 (Twin)
G3	3+88.82/Run A	Standard Type "1-A" Curb Inlet	TC: 186.07	FL(30"):175.14 FL(21"):175.89
G4	5+69.20/Run A 0+00.00/Run B	Standard Type "1-A" Curb Inlet	TC: 186.46	FL(21"):181.28 FL(18"):181.53
G5	7+71.58/Run A	Double-faced 72" Curb Inlet See Detail(Sheet 7)	TC:188.90	FL(18"):183.53
G6	2+77.02/Run B	2'x4' Drop Inlet	TC:185.50	FL(18"):183.13
G7	1+80.09/RunB	Shallow Type 'P' Manhole	Rim:187.25	FL(18"):182.55
G8	1+25.42/Run B	Standard Type "1-A" Curb Inlet	TC:186.16	FL(21"):181.97 FL(18"):182.22
G9	2+52.64/Run A	2'x4' Drop Inlet	Rim:185.00	FL(30"):173.88
G10	5+25.09/Run C	2'x4' Drop Inlet	Rim:186.15	FL(15"):184.85
G11	3+13.15/Run C	Shallow Type 'P' Manhole	Rim:189.61	FL(15"):184.00

P20 BUILD RCP STORM SEWER (Private Construction)

NO.	DESCRIPTION	SIZE	SLOPE	LENGTH
P1	Inlet G1 to Inlet G2	18"	S=0.00450	250 LF
P2	Inlet G4 to Inlet G3	21"	S=0.02988	177 LF
P3	Inlet G5 to Inlet G4	18"	S=0.01002	196 LF
P5	Inlet G9 to Inlet G4	21"	S=0.00550	122 LF
P6	Manhole G7 to Inlet G8	18"	S=0.00604	51 LF
P7	Inlet G6 to Manhole G7	18"	S=0.00593	94 LF
P8	Inlet G9 to Inlet G3	30"	S=0.00933	134 LF
P9	Inlet G1 to Manhole G11	15"	S=0.00400	55 LF
P10	Manhole G11 to Inlet G10	15"	S=0.00400	208 LF

P1 BUILD RCP STORM SEWER (Public Construction)

NO.	DESCRIPTION	SIZE	SLOPE	LENGTH
P4	Inlet T1 to Inlet G9	30"	S=0.00933	252 LF

City of Wichita Benchmark:

Brass Cap set in Concrete
Approximately 139' East of Southeast Corner of Teal Cove
Elevation: 187.63 (City of Wichita Datum)
2nd Addition, and approximately 51' North of Centerline of
East 37th Street North.

SCHEDULE OF APPROX. QUANTITIES (Private Construction)

DESCRIPTION	UNITS	QUANT.
30" RCP Storm Sewer Pipe	LF	134
21" RCP Storm Sewer Pipe	LF	299
18" RCP Storm Sewer Pipe	LF	395
15" RCP Storm Sewer Pipe	LF	250
Standard Type "1-A" Curb Inlet	Ea	4
Double-faced 72" Curb Inlet (See Detail)	Ea	1
2' x 4' Drop Inlet	Ea	3
Shallow Type 'P' Storm Sewer Manhole	Ea	2
Storm Sewer Manhole	VF	10.3
Tap Existing Inlet	Ea	1
Reconstruct Grate Inlet into Curb Inlet	Ea	1

SCHEDULE OF APPROX. QUANTITIES (Pubilc Construction)

DESCRIPTION	UNITS	QUANT.
30" RCP Storm Sewer Pipe	LF	252
Tap Existing Inlet	Ea	1

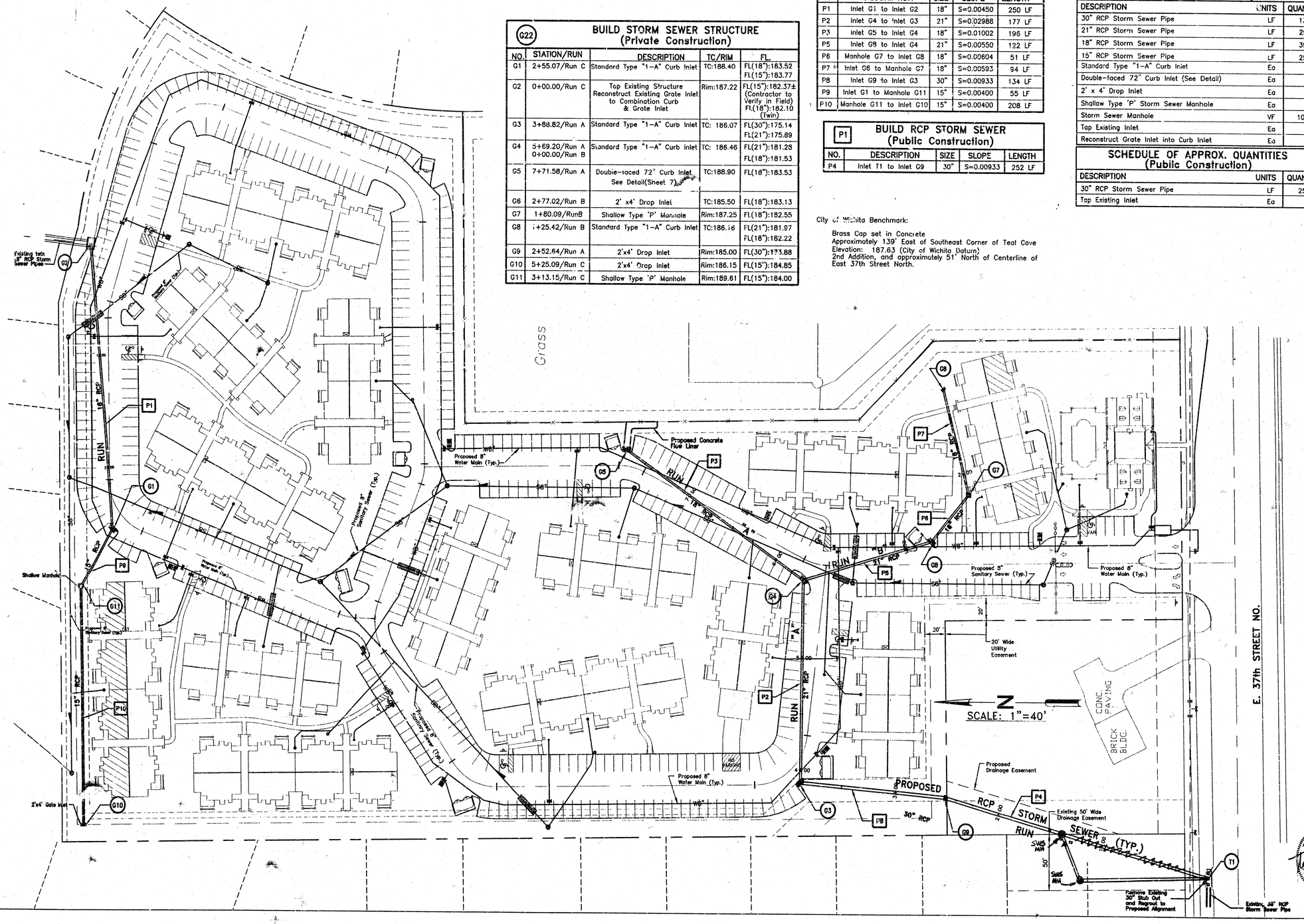

ROSS Engineering, Inc.
ENGINEERS • PLANNERS • SURVEYORS
445 N. Street
Suite 201
Lincoln, NE 68508
Phone 402-474-2427
FAX 402-474-2428

No.	Revisions	Rev. Date

Scale 1"=40'
Drawn GED
Checked KPO
Approved TAR

Job 98-50
File 98050SS1
Date 7/13/98
Plotte 9/10/98

PINEHURST APARTMENTS

E. 37TH STREET N. & ROCK ROAD
WICHITA KANSAS

STORM SEWER PLAN

Sheet No.
5 OF 12

TERRY A. BROWN
LICENSED
14851
KANSAS
PROFESSIONAL ENGINEER

J:\ACAD\PW\98805\98050SS1.dwg Thu Sep 10 12:02:19 1998 GED

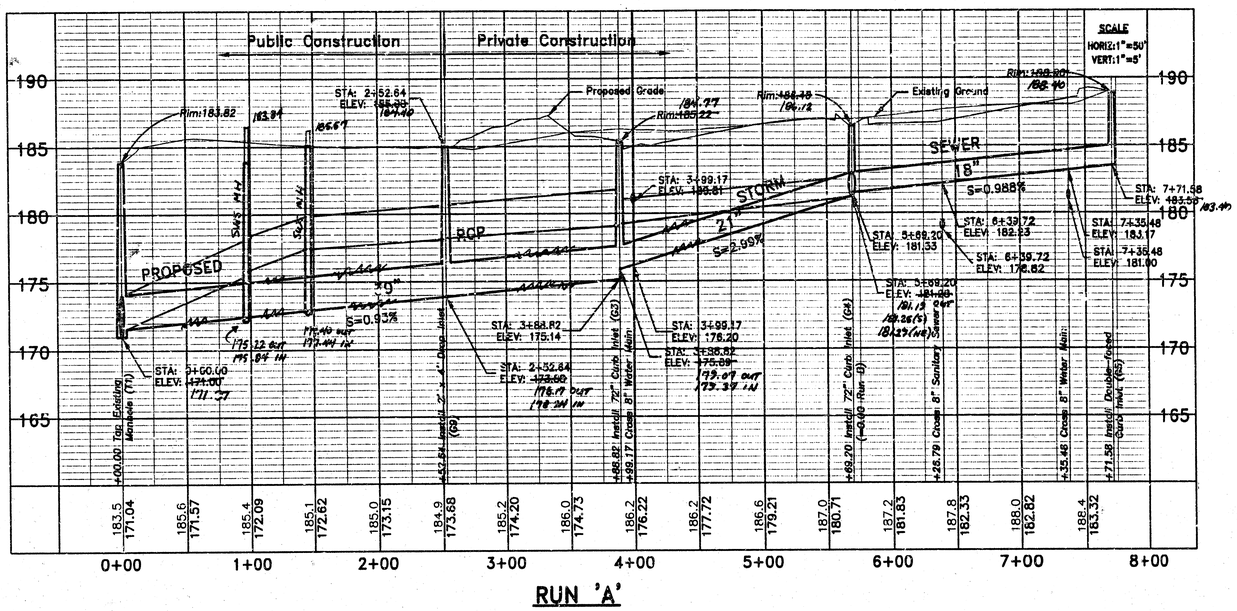

RUN 'A'

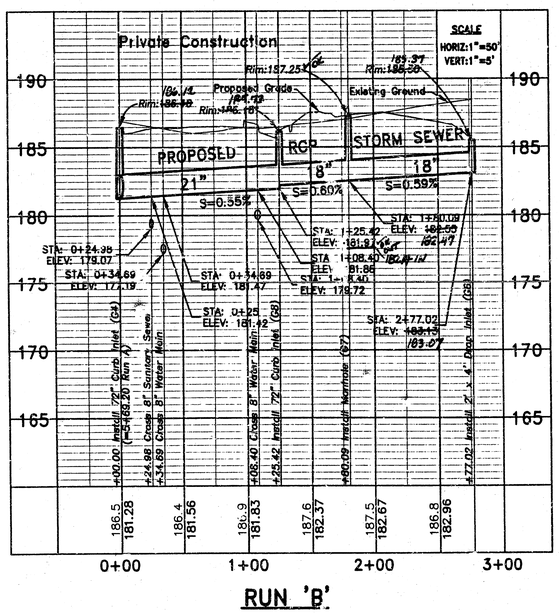

RUN 'B'

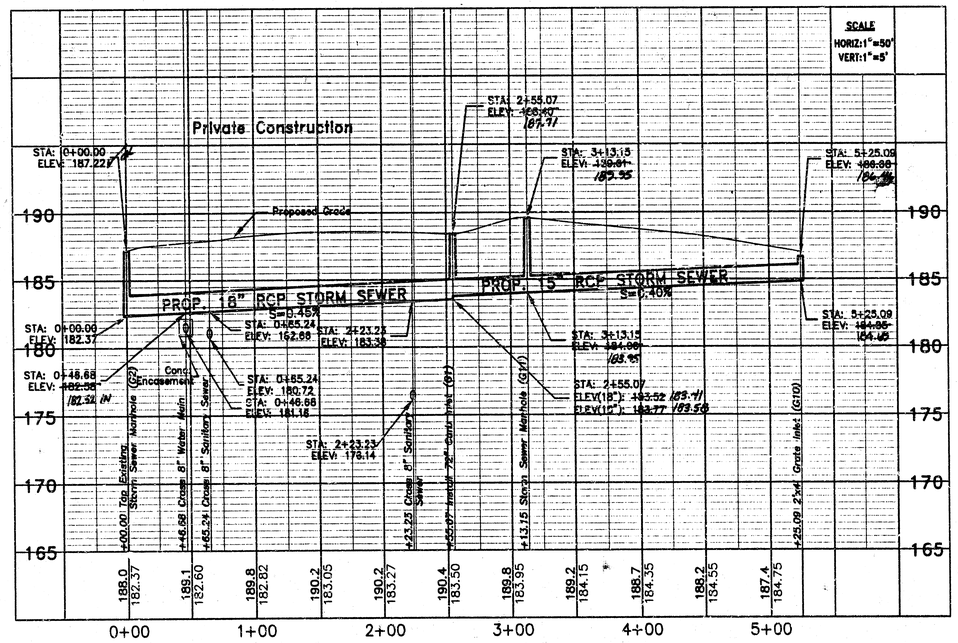

RUN 'C'

ASSUMED 12/98 by PAUGHMAN COMPANY, P.A.

TERRY A. BROWN LICENSED 14851 KANSAS PROFESSIONAL ENGINEER

ROSS Engineering, Inc.

ENGINEERS • PLANNERS • SURVEYORS

645 M Street
Suite 201
Lincoln, NE 68508
Phone 402-474-7677
FAX 402-474-7679

No.	Revisions	Rev. Date
	ASBUILT	12/98

Scale 1"=50'
Drawn LEE
Checked RPO
Approved TAB

Job# 985-50
File 98805SS
Date 7/16/98
Pdate 9/10/98

PINEHURST APARTMENTS

E. 37TH STREET N. & ROCK ROAD
WICHITA KANSAS

STORM PROFILES

Sheet No. 6 OF 12

J:\ADCADD\P\98805\98805SS.dwg Thu Sep 10 12:20:02 1998 RPO

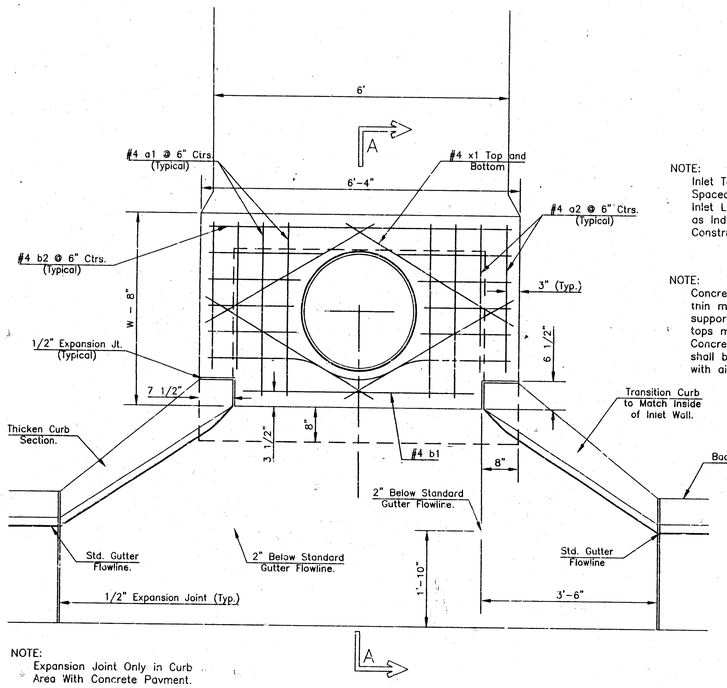

NOTE:
Inlet Top Reinforcing shall be Spaced on 6" Max. Centers. Inlet Lids Shall be Notched Out as Indicated to Facilitate Construction of Curb.

NOTE:
Concrete Tops to be installed on thin mortar cushion to insure full support along brick walls. Concrete tops may be cast in place or precast. Concrete used for inlet construction shall be concrete pavement mix with air entrainment.

NOTE:
Expansion Joint Only in Curb Area With Concrete Pavment.

PLAN

DOUBLE CURB INLET DETAIL

NO SCALE

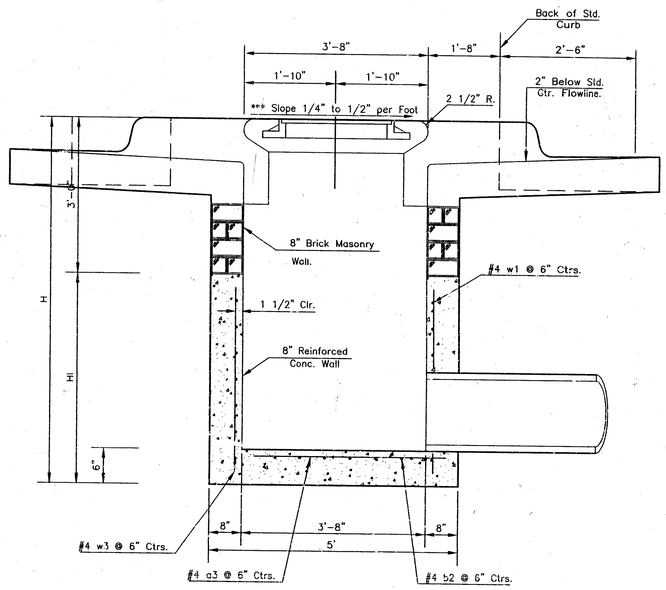

SECTION A-A

***NOTE: Slope of Inlet tops to Match Sidewalk or Parking Slopes within Limits Indicated.

ROSS Engineering, Inc.

ENGINEERS • PLANNERS • SURVEYORS

645 M Street
Suite 201
Lincoln, NE 68508
Phone 402-474-7677
FAX 402-474-7678

No.	Revisions	Rev. Date

Scale 1"=40'
Drawn GED
Checked RPo
Approved TAB

Job # 988-5D
File 98805SS1
Date 7/13/98
Pdate 9/2/98

PINEHURST APARTMENTS
E. 37TH STREET N. & ROCK ROAD
WICHITA KANSAS

DOUBLE CURB INLET DETAIL

TERRY A. BROWN
LICENSED
14851
KANSAS
PROFESSIONAL ENGINEER

Sheet No. 7 OF 12

J:\ADCADD\P\98805\98805SS1.dwg Wed Sep 02 17:44:27 1998 SAK

SEWER APPURTENANCES DETAILS

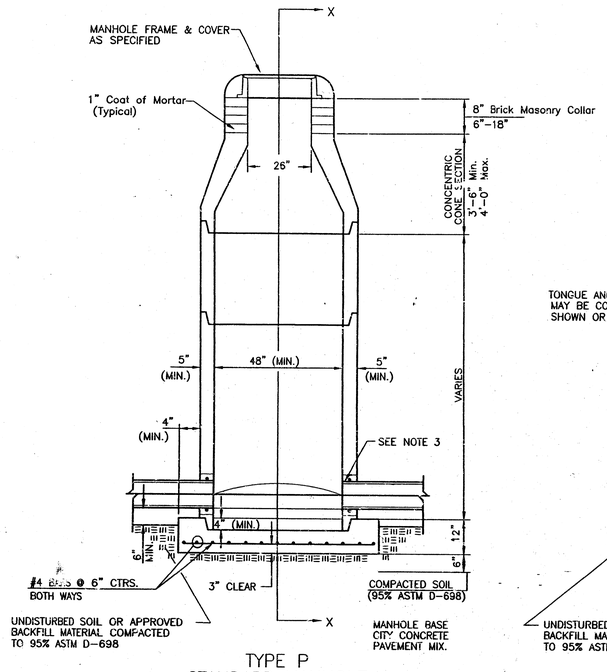

TYPE P
STANDARD MANHOLE

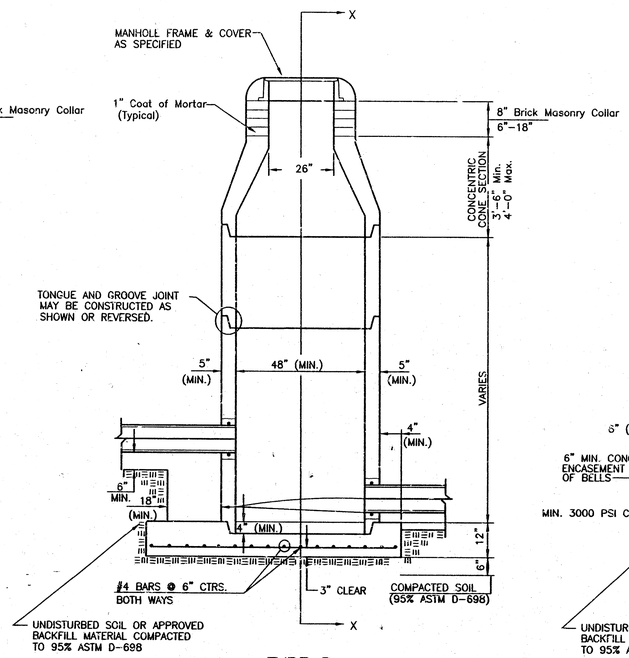

TYPE P
INSIDE DROP MANHOLE

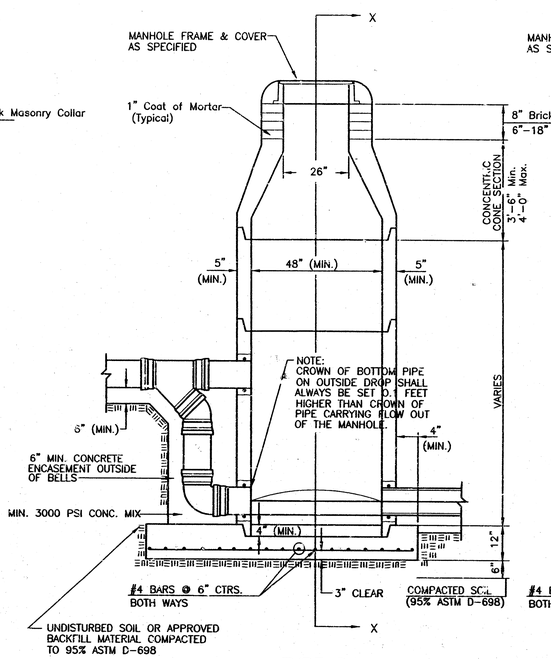

TYPE P
OUTSIDE DROP MANHOLE

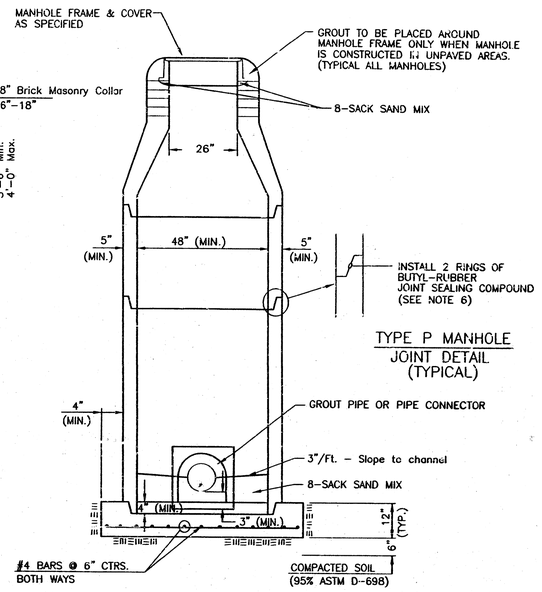

SECTION X
(TYPICAL)

TYPE P MANHOLE
JOINT DETAIL
(TYPICAL)

GENERAL NOTES

PRECAST MANHOLE NOTES

1. ALL PRECAST CONCRETE MANHOLE SECTIONS SHALL CONFORM TO THE LATEST REVISIONS OF A.S.T.M. C478 AS MODIFIED BY THE SPECIFICATIONS.
2. NON-SHRINK GROUT SHALL BE NON-METALLIC TYPE.
3. APPROVED FLEXIBLE WATERSTOP GASKETS SHALL BE INSTALLED TO JOIN THE SEWER TO THE MANHOLE WALL WHEN A.B.S. COMPOSITE PIPE OR P.V.C. PIPE IS USED. FOR OTHER TYPES OF PIPE THE SEWER SHALL BE GROUTED IN PLACE WITH NON-SHRINK GROUT. THE SEWER PIPE SHALL BE SUPPORTED WITH CONCRETE ENCASEMENT A MINIMUM OF 3 FEET FROM THE MANHOLE WALL AND TO THE FIRST JOINT FOR V.C.P. SUCH THAT THE JOINT REMAINS FLEXIBLE.
4. ALL INSIDE SURFACES OF THE CONCRETE MANHOLE WHICH WOULD BE EXPOSED TO SEWER GAS SHALL BE COATED WITH 2 COATS TNEMEC SERIES 66 HI-BUILD EPOXOLINE, DRY THICKNESS OF 8 MILS (MIN.)
5. EXTERIOR MANHOLE WALLS SHALL BE COATED WITH 1 COAT MOBILARMA 633 BITUMINOUS COATING.
6. JOINT SEALING COMPOUND SHALL BE KENT SEAL NO. 2 OR APPROVED EQUAL.
7. PRECAST MANHOLES SHALL BE SET AT LEAST 4 INCHES INTO THE MANHOLE BASE.
8. TOP OF MANHOLE FLOOR SLAB SHALL BE AT LEAST 3 INCHES BELOW THE FLOW LINE OF THE OUTLET PIPE TO INSURE SUFFICIENT MINIMUM THICKNESS OF SHAPED INVERT.
9. LIFTING HOLES SHALL BE FILLED WITH NON-SHRINK GROUT AND THE INTERIOR SURFACE COATED AS SPECIFIED.
10. MORTAR USED IN MASONRY CONSTRUCTION SHALL CONTAIN 8 SACKS OF CEMENT PER CUBIC YARD. CONCRETE USED IN MANHOLE BASES SHALL CONFORM TO THE REQUIREMENTS OF CONCRETE FOR CONCRETE PAVEMENT CONSTRUCTION AS SPECIFIED IN THE CITY STANDARD PAVING SPECIFICATIONS USING CITY CONCRETE PAVEMENT MIX WITHOUT AIR ENTRAINING ADMIXTURE. MORTAR SHALL BE PLACED AROUND THE MANHOLE RING AS SHOWN ON THE DRAWINGS WHEN MANHOLES ARE CONSTRUCTED IN UNPAVED AREAS. MANHOLES CONSTRUCTED WHERE PIPE SIZES ARE SMALLER THAN 24" SHALL HAVE AN INSIDE DIAMETER OF 4'. MANHOLES CONSTRUCTED WHERE PIPE SIZES ARE 24" OR LARGER SHALL HAVE AN INSIDE DIAMETER OF 5'. COMPLETED MANHOLE SHALL BE WITHOUT LEAKS AND WATER-TIGHT.
11. REINFORCING STEEL SHALL BE INSTALLED IN THE MANHOLE BASES AND SHALL CONSIST OF NO. 4 BARS PLACED ON 6" CENTERS IN BOTH DIRECTIONS. THE MANHOLE BASE REINFORCEMENT SHALL BE PLACED AT LEAST 3" ABOVE THE BOTTOM OF THE MANHOLE BASE. ALL COSTS FOR FURNISHING AND INSTALLING REINFORCING STEEL SHALL BE INCLUDED IN THE UNIT PRICE BID FOR THE MANHOLE.
12. OPENINGS SHALL BE CUT INTO THE MANHOLE WALL WHEN OUTSIDE DROPS ARE CONSTRUCTED ON EXISTING MANHOLES. SUCH OPENINGS CUT INTO EXISTING MANHOLES SHALL BE AS SMALL AS PRACTICAL TO FACILITATE INSTALLING AND GROUTING THE NEW PIPE IN PLACE. WATERSTOP GASKETS SHALL BE USED WITH P.V.C. AND A.B.S. COMPOSITE PIPE. THE NEW PIPE SHALL BE GROUTED INTO THE OPENING USING AN APPROVED NONSHRINK GROUT FOR THE FULL MANHOLE WALL THICKNESS. THE EXTERIOR OF THE COMPLETED CONNECTION SHALL BE SEALED WITH AN APPROVED BITUMINOUS COATING SUCH THAT THE CONNECTION WILL BE WATER TIGHT. FLOOR OF MANHOLE SHALL BE MODIFIED TO FORM NEW FLOW CHANNEL FOR THE NEW CONNECTION AS INDICATED BY THE DRAWING. THIS WORK, INCLUDING MODIFICATION OF MANHOLE FLOOR, SHALL BE PAID FOR AT THE UNIT PRICE BID FOR OUTSIDE DROP STACK CONSTRUCTED ON EXISTING MANHOLE.
13. THE FLOORS OF ALL MANHOLES SHALL BE SHAPED WITH FLOW CHANNELS SUCH THAT THE MANHOLES WILL BE SELF CLEANING AND FREE OF AREAS WHERE SOLIDS COULD BE DEPOSITED AS SEWAGE FLOWS THROUGH THE MANHOLE FROM ALL INLET PIPES TO THE OUTLET PIPE. FLOW CHANNELS SHALL BE FORMED TO MATCH THE BOTTOM HALVES OF THE INFLOWING PIPES AND THE OUTFLOWING PIPE AS SHOWN BY THE DRAWINGS EXCEPT FOR INSIDE DROP MANHOLES. FLOW CHANNELS FOR INSIDE DROP MANHOLES SHALL BE CONSTRUCTED AS INDICATED BY THE DRAWING. MANHOLE FLOORS SHALL HAVE SLOPES OF 3 INCHES PER FOOT IN THE AREAS OUTSIDE OF THE FLOW CHANNELS SLOPED TOWARD THE FLOW CHANNELS. PIPES LAID THROUGH MANHOLES SHALL HAVE THE TOP HALF REMOVED TO NEAT LINES FOR THE FULL INSIDE DIAMETER OF THE MANHOLE. MANHOLE FLOORS SHALL THEN BE SHAPED AROUND THE BOTTOM HALF OF THE PIPE WHICH FORMS THE FLOW CHANNEL.
14. PIPES INSTALLED WITHIN THE EXCAVATION MADE FOR THE MANHOLE SHALL BE CRADLED WITH CONCRETE TO THE LIMITS OF THE MANHOLE EXCAVATION. WHEN CLAY PIPE IS USED, THE CRADLE SHALL EXTEND TO THE FIRST JOINT OUTSIDE THE MAHOLE. THE CRADLE SHALL BE TERMINATED AT THE CLAY PIPE JOINT IN A MANNER WHICH WILL MAINTAIN THE FLEXIBILITY OF THE JOINT. COST OF CRADLE WITHIN MANHOLE EXCAVATION OR TO CLAY PIPE JOINTS ADJACENT TO MANHOLE SHALL BE INCLUDED IN THE UNIT PRICE BID FOR THE MANHOLE.
15. MANHOLE COVER CASTINGS AND MANHOLE FRAME CASTINGS SHALL CONFORM TO THE REQUIREMENTS AS INDICATED IN THE STANDARD SPECIFICATIONS AND AS SHOWN IN THE STANDARD DETAIL DRAWING.
16. THE VERTICAL DROP IN INSIDE DROP MANHOLES SHALL NOT EXCEED 2' FOR INFLOWING PIPES SIZED 12" OR SMALLER AND 2' FOR INFLOWING PIPES LARGER THAN 12". THE CROWNS OF INFLOWING PIPES SHALL NEVER BE SET LOWER THAN THE CROWN OF THE OUTFLOWING PIPE.
17. STANDARD MANHOLES AND STANDARD INSIDE DROP MANHOLES SHALL BE BID AS STANDARD MANHOLES FOR THE TYPE AND DIAMETER INDICATED. OUTSIDE DROP MANHOLES SHALL BE BID AS STANDARD OUTSIDE DROP MANHOLES FOR THE TYPE AND DIAMETER INDICATED. ALL MANHOLE DIAMETERS WILL BE 4' UNLESS INDICATED OTHERWISE.
18. A BRICK MASONRY COLLAR SHALL BE INSTALLED BETWEEN THE CAST IRON FRAME AND THE CONCENTRIC CONE. THE COLLAR WILL HAVE 8" WALLS AND A VERTICAL HEIGHT OF 6" MINIMUM AND 18" MAXIMUM. A 1" COAT OF MORTAR WILL BE PLASTERED ON THE OUTSIDE OF THE COLLAR. THE USE OF PRE-CAST CONCRETE SPACERS FOR MANHOLE TOP ADJUSTMENT IS ALSO ALLOWED.

THE CITY OF WICHITA

CITY ENGINEER'S OFFICE
CITY HALL - SEVENTH FLOOR
455 NORTH MAIN 67202
WICHITA, KANSAS 67202
(316) 268-4581
(316) 268-4114 FAX

STANDARD TYPE 'P' MANHOLES

M. E. LINDEBAK P.E. - CITY ENGINEER

PROJECT NUMBER	INDEX CODE
834PPS	607861
DATE: MAR 96	SHEET 8 OF 12

J:\ACAD\DVP\98805\98805012.dwg Thu Sep 03 11:27:15 1998 SAK

MANHOLE FRAME AND COVER DETAIL

ADOPTED AS STANDARD DESIGN BY
CITY OF WICHITA, KANSAS

MANHOLE COVER
Weight = 180 Lbs.

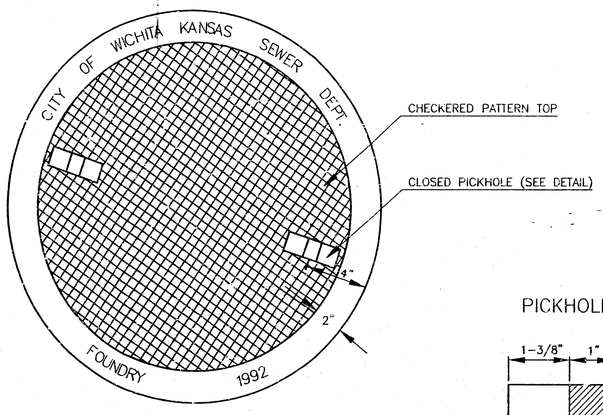

TOP VIEW

PICKHOLE DETAIL

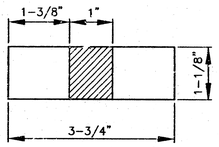

TOP VIEW

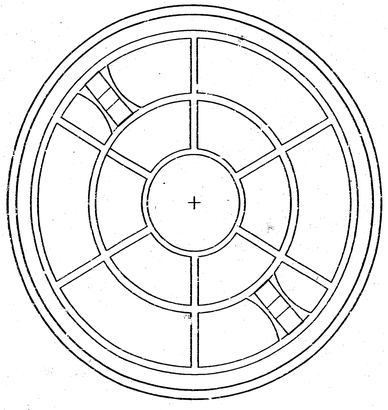

BOTTOM VIEW

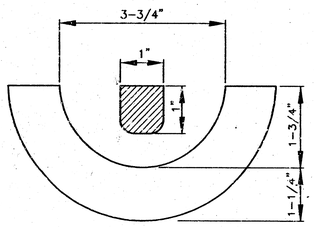

SECTION VIEW

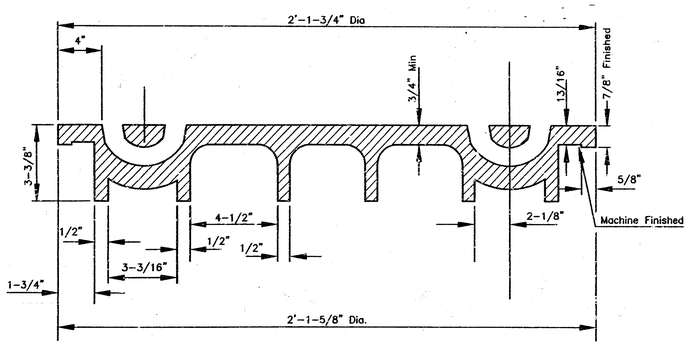

SECTION VIEW

MANHOLE FRAME
Weight = 240 Lbs.

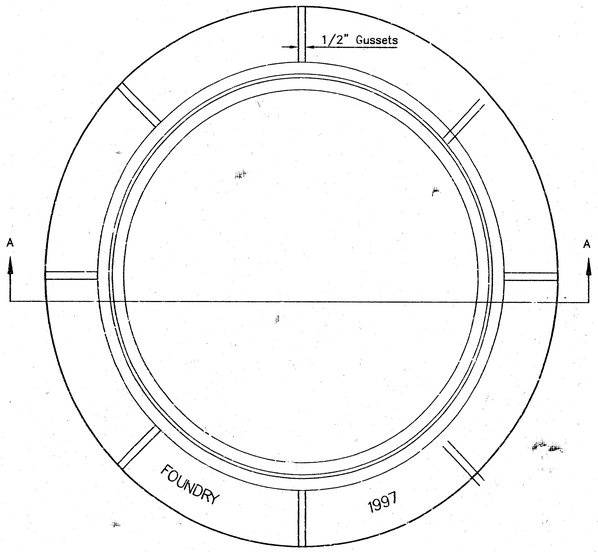

TOP VIEW

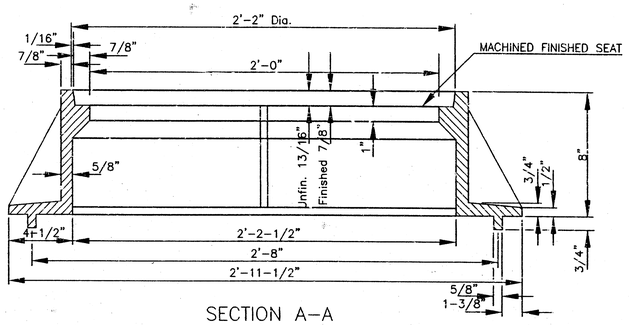

SECTION A–A
MUD RING

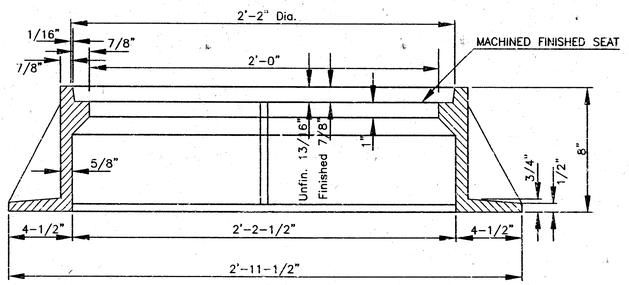

SECTION A–A

GENERAL NOTES

1. MANHOLE CASTINGS SHALL BE MANUFACTURED USING GOOD QUALITY GRAY IRON CONFORMING TO CLASS 30 OF A.S.T.M. DESIGNATION A-48. DIMENSIONS AND WEIGHTS SHOWN ON THE DETAILED DRAWINGS SHALL BE CONSIDERED AS MINIMUM REQUIREMENTS AND ANY DEVIATIONS FROM THE DIMENSIONS SHOWN MUST BE SPECIFICALLY APPROVED. THE FINISHED CASTINGS SHALL BE OF UNIFORM QUALITY, FREE FROM BLOWHOLES, POROSITY, HARD SPOTS, SHRINKAGE DISTORTIONS OR OTHER DEFECTS.

2. MANHOLE CASTINGS SHALL WEIGH A MINIMUM OF 180 POUNDS ON THE SOLID COVER AND 240 POUNDS ON THE MANHOLE RING. THIS IS A TOTAL OF 420 POUNDS ON A RING AND COVER SET. CASTINGS WEIGHING LESS THAN THE MINIMUM SPECIFICATIONS WILL NOT BE ACCEPTED.

3. MANHOLE CASTINGS SHALL BE MANUFACTURED SUCH THAT A COVER MANUFACTURED BY ANY ONE FOUNDARY WILL FIT INTERCHANGEABLY INTO A FRAME MANUFACTURED BY ANOTHER FOUNDRY AND STILL MEET ALLOWABLE CLEARANCES AND NON-ROCKING REQUIREMENTS. THIS WILL REQUIRE MANUFACTURING OF THE MATCHING FACES ON THE COVER AND THE FRAME TO CLOSE TOLERANCES.

4. THE OUTSIDE CIRCUMFERENCE OF THE VERTICAL FACE OF THE COVER AND THE INSIDE CIRCUMFERENCE OF THE VERTICAL FACE IN THE FRAME RECESS SHALL BE MANUFACTURED TO TOLERANCES SUCH THAT THE CLEARANCE BETWEEN THE COVER AND FRAME WILL NOT EXCEED 1/8" AT ANY POINT AROUND THE CIRCUMFERENCE OF THE COVER. THE SEATING SURFACES BETWEEN THE COVER AND FRAME SHALL BE MACHINED SUCH THAT THESE SEATING SURFACES SHALL MAKE FULL CONTACT FOR THEIR FULL CIRCUMFERENCE TO PRECLUDE THE COVER FROM ROCKING IN THE FRAME.

5. THE MANHOLE FRAME AND COVER SHALL BE MARKED WITH LETTERING INDICATING THE NAME OF THE MANUFACTURER AND THE YEAR WHEN THE COVER OR FRAME WAS CAST. THE COVER SHALL BE FURTHER IDENTIFIED WITH REGARDS TO OWNERSHIP USING LETTERS AT LEAST 1 INCH IN HEIGHT. THIS IDENTIFICATION SHALL BE "CITY OF WICHITA SEWER DEPARTMENT". THE WORD DEPARTMENT MAY BE ABBREVIATED. THE TEXTURE OF THE TOP SURFACE OF THE COVER SHALL BE MANUFACTURED IN A CHECKERED PATTERN DESIGN AS INDICATED ON THE DRAWINGS. SMOOTH BLOCKOUTS SHALL BE UTILIZED TO HIGHLIGHT THE LETTERING ON THE COVER SURFACE. THE TOTAL AREA OF SMOOTH SURFACE BLOCKOUT SHALL NOT EXCEED THE AREA AS INDICATED ON THE DRAWING. POSITIONING OF SMOOTH BLOCKOUTS AND LETTERING MAY VARY FROM THAT SHOWN ON THE DETAILED DRAWING.

THE CITY OF WICHITA

CITY ENGINEER'S OFFICE
CITY HALL - SEVENTH FLOOR
455 NORTH MAIN STREET
WICHITA, KANSAS 67202
(316) 268-4501
(316) 268-4112 FAX

MANHOLE FRAME AND COVER

M. E. LINDEBAK P.E. - CITY ENGINEER

PROJECT NUMBER	INDEX CODE
83499S	607851
DATE: MAR 96	SHEET 9 OF 12

C:\CADD\PW\98805\98805DT1.dwg Thu Sep 03 11:30:12 1998 SAK

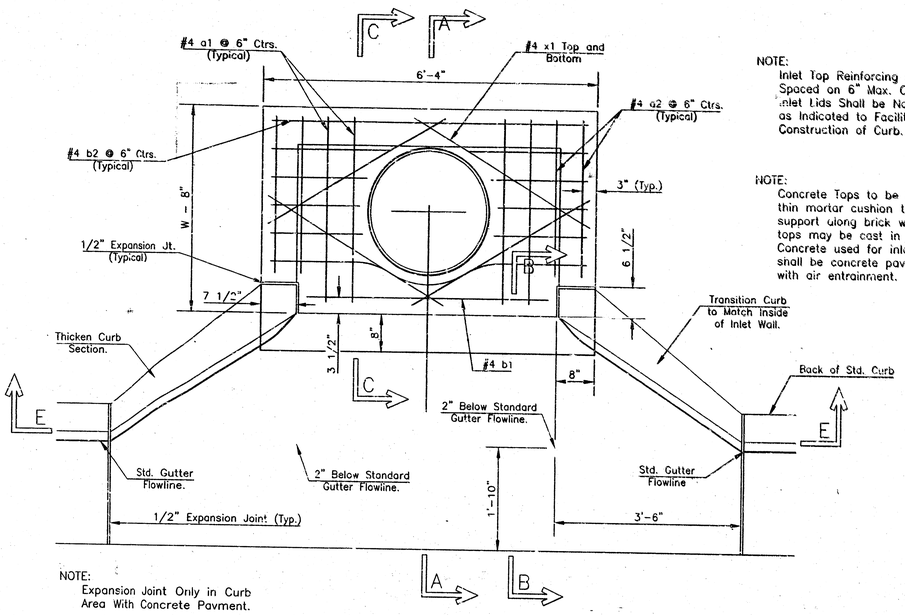

NOTE:
Expansion Joint Only in Curb Area With Concrete Pavment.

PLAN

NOTE:
Inlet Top Reinforcing shall be Spaced on 6" Max. Centers. Inlet Lids Shall be Notched Out as Indicated to Facilitate Construction of Curb.

NOTE:
Concrete Tops to be installed on thin mortar cushion to insure full support along brick walls. Concrete tops may be cast in place or precast. Concrete used for inlet construction shall be concrete pavement mix with air entrainment.

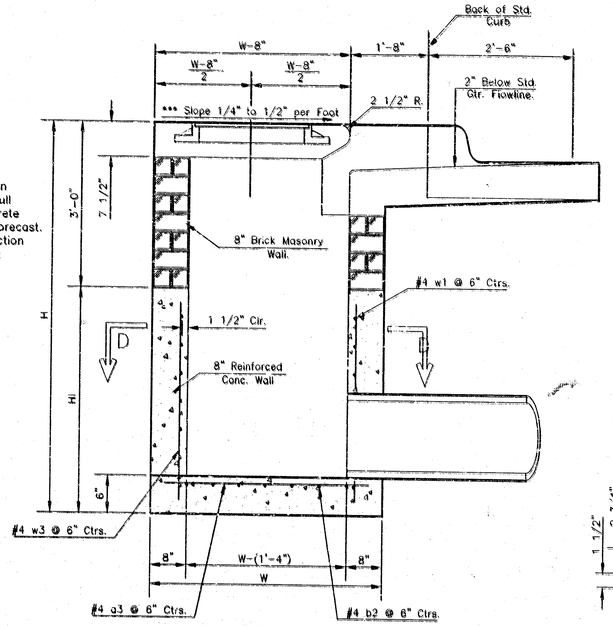

SECTION A-A

***NOTE: Slope of inlet tops to Match Sidewalk or Parking Slopes within Limits Indicated.

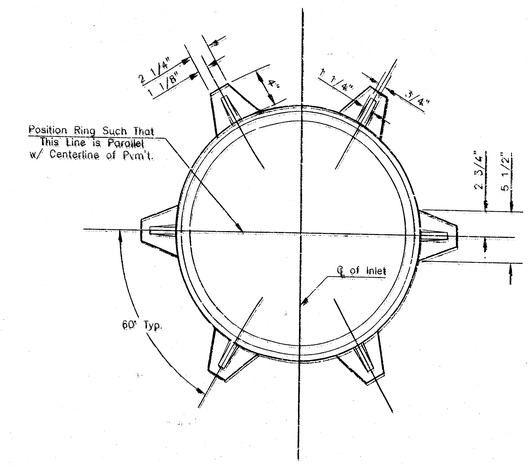

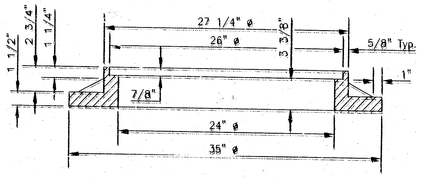

MANHOLE RING AND COVER
Weight = 180 Lbs.

*See City of Wichita Standard Manhole Ring and Cover Detail Sheet for Cover Details to Be used With Inlet Frame.

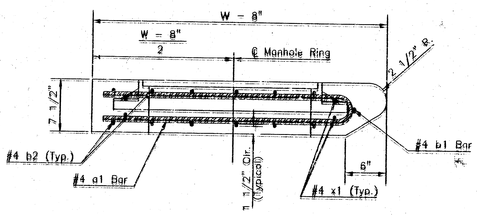

SECTION A-A

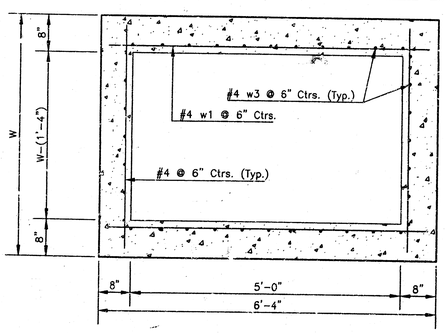

SECTION D-D

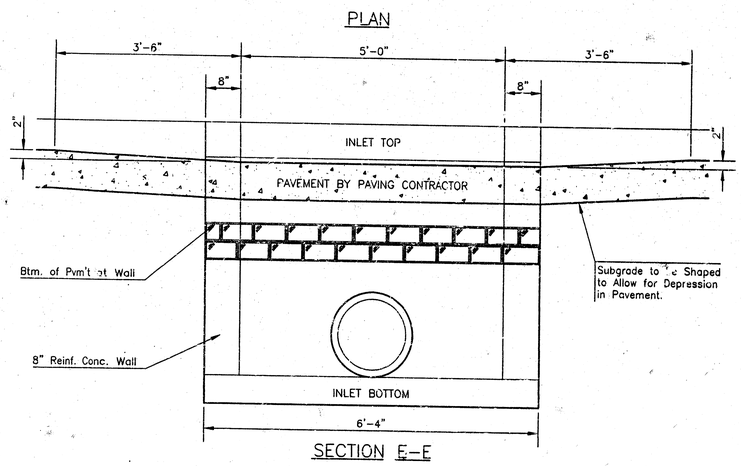

SECTION E-E

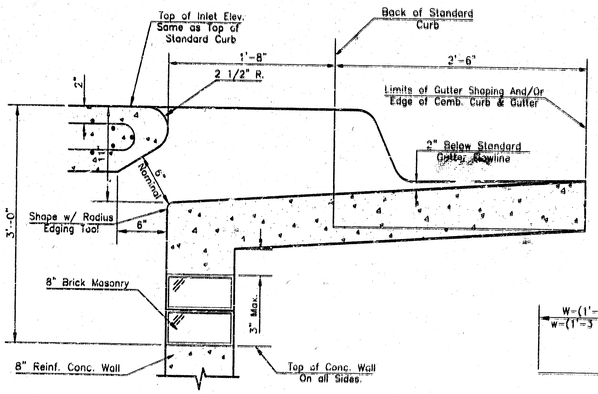

SECTION B-B

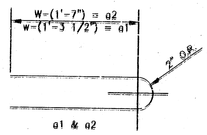

BENDING DIAGRAM

NOTE: Contractor shall have the option of constructing 8" brick masonry walls between the concrete inlet base and top on this inlet when W=6'-4" and H=7'-0" or less.

Additional curb and gutter construction necessary to connect set-back inlet to pavement will be paid for at the unit price bid for each inlet hookup.

Inlet invert shall be shaped with 8 sack sand mix concrete to create flow channels and to increase hydraulic efficiency such that the inlet will be self-cleaning between inlet and/or outlet pipes.

The ends of all pipes installed in inlets shall be cut off flush with the inside face of the inlet wall

PRECAST SLAB AND FLOOR REINFORCING

		W = 4'-4"		W = 5'-4"		W = 6'-4"		W = 7'-4"		W = 8'-4"	
MARK	SIZE	NO.	LENGTH	NO.	LENGTH	NO.	LENGTH	NO.	LENGTH	NO.	LENGTH
* a1	#4	6	6'-7"	6	8'-7"	6	10'-7"	6	12'-7"	6	14'-7"
a2	#4	4	6'-0"	4	8'-0"	4	10'-0"	4	12'-0"	4	14'-0"
a3	#4	13	4'-1"	13	5'-1"	13	6'-1"	13	7'-1	13	8'-1"
b1	#4	1	4'-9"	1	4'-9"	1	4'-9"	1	4'-9"	1	4'-9"
* b2	#4	23	6'-1"	29	7'-1"	35	8'-1"	41	9'-1"	47	10'-1"
x1	#4	8	3'-10"	8	4'-2"	8	4'-6"	8	4'-10"	8	5'-2"
WALL REINFORCING											
		W = 4'-4"		W = 5'-4"		W = 6'-4"		W = 7'-4"		W = 8'-4"	
MARK	SIZE	NO.	LENGTH	NO.	LENGTH	NO.	LENGTH	NO.	LENGTH	NO.	LENGTH
w1	#4	①	6'-1"	①	6'-1"	①	6'-1"	①	5'-1"	①	6'-1"
w2	#4	①	4'-1"	①	5'-1"	①	5'-1"	①	7'-1"	①	8'-1"
w3	#4	32	②	36	②	40	②	44	②	48	②

* Field Bend or Cut Reinforcing as Required for Clearance.
①4 (Hi - 12") (Hi - 21") Rounded down to nearest 0.5'
②Hi - 3"

STANDARD CURB INLET PRECAST TOPS

W	PRE-CAST TOP SIZE	PIPE SIZE	CU. YD. CONC.
4'-4"	3'-8" x 6'-4" x 7 1/2"	21" & SMALLER	0.38±
5'-4"	4'-8" x 6'-4" x 7 1/2"	24" & 30"	0.51±
6'-4"	5'-8" x 6'-4" x 7 1/2"	36" & 42"	0.64±
7'-4"	6'-8" x 6'-4" x 7 1/2"	48" & 54"	0.77±
8'-4"	7'-8" x 6'-4" x 7 1/2"	60" & 66"	0.90±

THE CITY OF WICHITA
CITY ENGINEER'S OFFICE
CITY HALL - SEVENTH FLOOR
455 NORTH MAIN STREET
WICHITA, KANSAS 67202
(316) 268-4512 FAX

STANDARD TYPE 1-A CURB INLET OPENING = 6" x 5'-0"

M. E. LINDEBAK P.E. - CITY ENGINEER

PROJECT NUMBER	INDEX CODE
834PPS	607861
DATE: MAR 96	SHEET 10 OF 12

D:\DGN\98005\98005073.dwg Thu Sep 03 11:35:51 1998 SAK

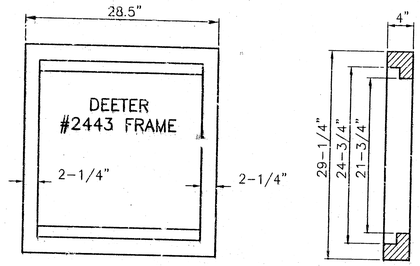

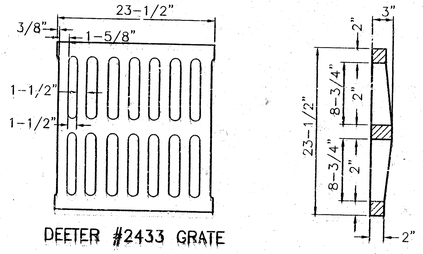

DEETER #2433 GRATE

NOTE: Grates shell be imprinted on the top surfcce with "CITY OF WICHITA" using letters at least 1" in height. Other marking methods may be approved by the engineer.

24" x 24" Frame and Grate Detail

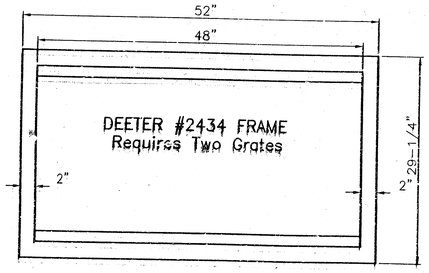

Double 24" x 24" Frame Detail

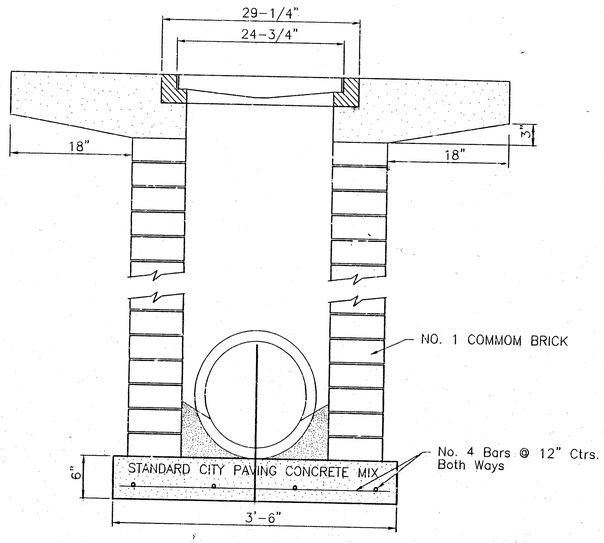

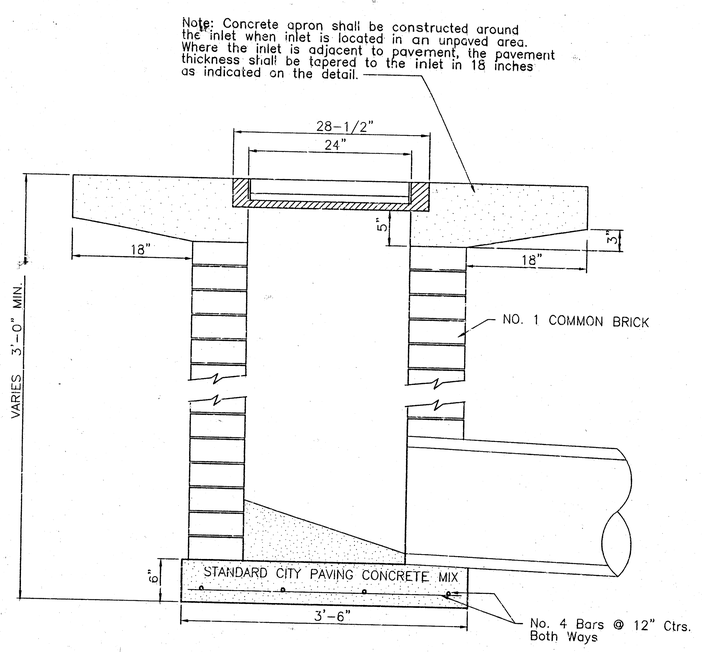

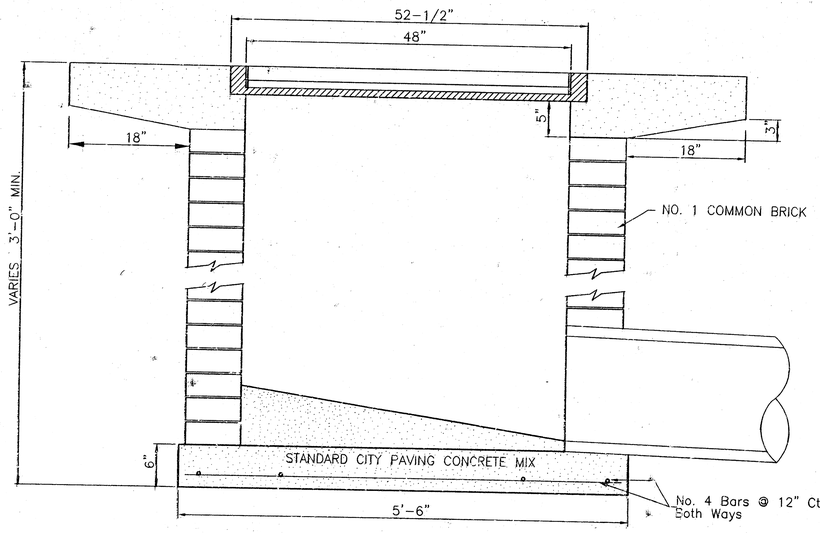

THE CITY OF WICHITA

CITY ENGINEER'S OFFICE
CITY HALL – SEVENTH FLOOR
455 NORTH MAIN STREET
WICHITA, KANSAS 67202
(316) 268-4601
(316) 268-4114 FAX

DROP INLET
2' X 2'/2' X 4'

M. E. LINDEBAK P.E. – CITY ENGINEER

PROJECT NUMBER	INDEX CODE
834PPS	607861
DATE: MAR 96	SHEET 11 OF 12

\\DATA\USERS\ENGR\SMK\DGN\607861D03.dgn Thu Sep 03 11:36:14 1998 SMK

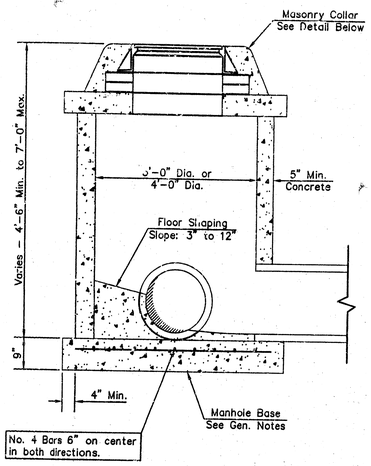

SHALLOW TYPE "P" MANHOLE

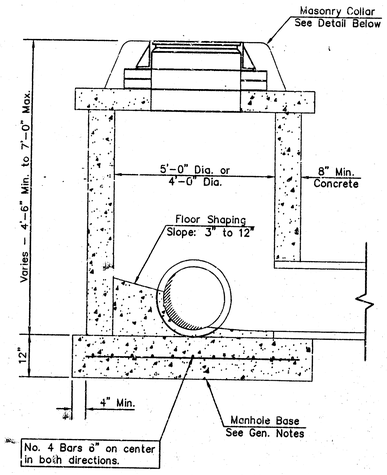

SHALLOW TYPE "C" MANHOLE

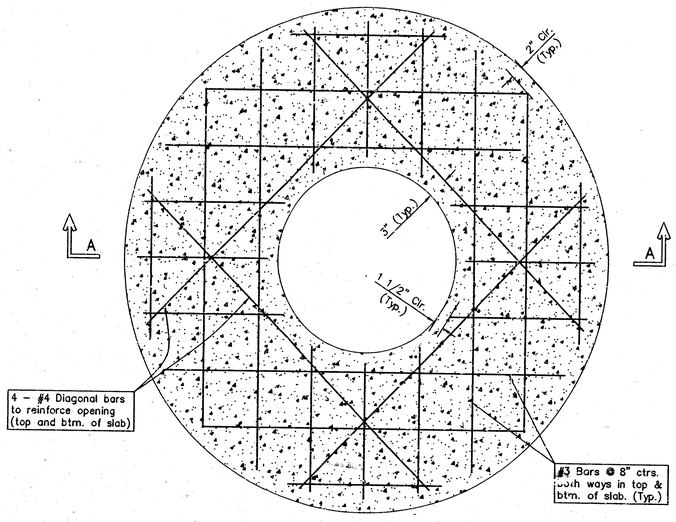

PLAN

GENERAL NOTES

1. Mortar used in masonry construction shall contain 8 sacks of cement per cubic yard. Concrete used in manhole bases shall conform to the requirements of concrete for concrete pavement construction as specified in the city standard paving specifications using city concrete cement mix without air entraining admixture. Mortar shall be placed around the manhole ring as shown on the drawings when manholes are constructed in unpaved areas. Manholes constructed where pipe sizes are smaller than 24" shall have an inside diameter of 4'. Manholes constructed where pipe sizes are 24" or larger shall have an inside diameter of 5'. Completed manhole shall be without leaks and water tight.

2. Reinforcing steel shall be installed in the manhole bases and shall consist of no. 4 bars placed on 8" centers in both directions. The manhole base reinforcement shall be placed 6" above the bottom of the manhole base. All costs for furnishing and installing reinforcing steel shall be included in the unit price bid for the manhole.

3. The floors of all manholes shall be shaped with flow channels such that the manholes will be self cleaning and free of areas where solids could be deposited as sewage flows through the manhole from all inlet pipes to the outlet pipe. Flow channels shall be formed to match the bottom halves of the inflowing pipes and the outflowing pipe as shown by the drawings. Manhole floors shall have slopes of 3 inches per foot in the areas outside of the flow channels sloped toward the flow channels. Pipes laid through manholes shall have the top half removed to neat lines for the full inside diameter of the manhole. Manhole floors shall then be shaped around the bottom half of the pips which forms the flow channel.

4. Pipes installed within the excavation made for the manhole shall be cradled with concrete to the limits of the manhole excavation. When clay pipe is used, the cradle shall extend to the first joint outside the manhole. The cradle shall be terminated at the clay pipe joint in a manner which will maintain the flexibility of the joint. Cost of cradle within manhole excavation or to clay pipe joints adjacent to manhole shall be included in the unit price bid for the manhole.

5. Manhole cover castings and manhole frame castings shall conform to the requirements as indicated in the standard specifications and as shown in the standard detail drawings.

6. The crowns of inflowing pipes shall never be set lower than the crown of the outflowing pipe.

7. Standard shallow manholes type "P" and "C" shall be paid for at the unit price bid per each for the type and diameter indicated. All standard shallow manhole diameters will be 4' unless indicated otherwise.

8. All brick used in manhole construction shall meet Grade SW of ASTM C652 or C62–87.

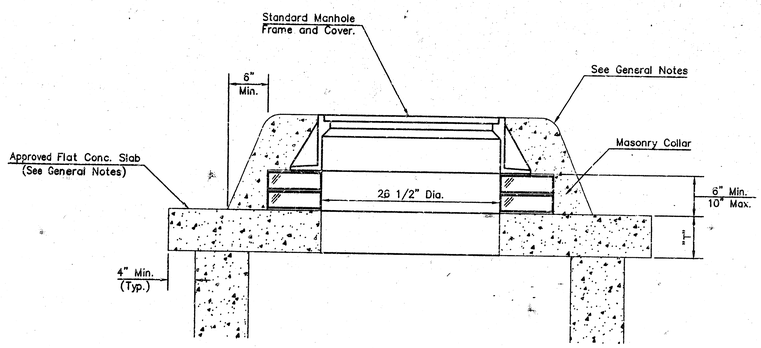

MASONRY COLLAR DETAIL

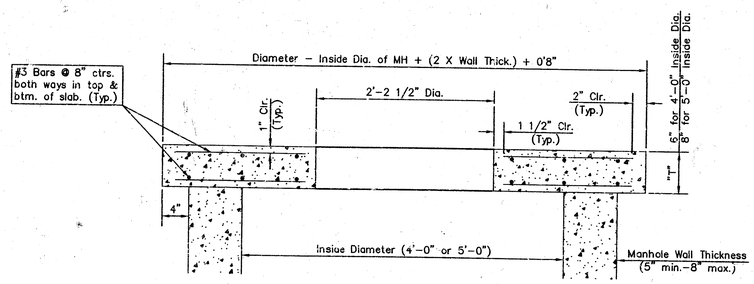

SECTION A–A

FLAT CONCRETE SLAB DETAILS

THE CITY OF WICHITA

CITY ENGINEER'S OFFICE
CITY HALL – SEVENTH FLOOR
455 NORTH MAIN STREET
WICHITA, KANSAS 67202
(316) 268-4351
(316) 268-4114 Fax

SHALLOW MANHOLES

TYPE 'P' & 'C'

M. E. LINDEBAK P.E. – CITY ENGINEER

PROJECT NUMBER	INDEX CODE
834PPS	607861
DATE	SHEET 12 OF 12
MAR 98	

J8 03 03 02

M:\ENGINEER\STDDWGS\607861S1.dwg Thu Sep 03 11:30:34 1998 SMC