SANITARY SEWER PLANS FOR

QUAIL RIDGE ADDITION
PHASE 2

AN ADDITION TO
CITY OF BEL AIRE
SEDGWICK COUNTY, KANSAS
NOVEMBER 1997

GENERAL NOTES

1. THE CONTRACTOR SHALL BE RESPONSIBLE FOR PRESERVING PROPERTY IRONS. THE CONTRACTOR WILL BE REQUIRED TO RE-ESTABLISH ANY PROPERTY IRONS WHICH ARE DAMAGED OR DESTROYED BY HIS CONSTRUCTION OPERATIONS. SUCH IRONS SHALL BE RE-ESTABLISHED BY A LICENSED LAND SURVEYOR IN ACCORDANCE WITH STATE LAWS.

2. EXISTING UTILITIES AND THEIR LOCATIONS, AS SHOWN ON THE PLANS REPRESENT THE BEST INFORMATION OBTAINABLE FOR DESIGN. LOCATION INFORMATION HAS BEEN OBTAINED FROM THE VARIOUS UTILITY COMPANIES AND IS EITHER FROM COMPANY RECORD DRAWINGS OR COMPANY PROVIDED FIELD LOCATIONS. THE PLAN LOCATIONS SHOWN ARE NOT GUARANTEED. ADDITIONAL EXISTING UTILITIES MAY ALSO BE ENCOUNTERED.

3. CONTRACTOR WILL BE REQUIRED TO PROVIDE A MINIMUM ADVANCE NOTICE OF FORTY-EIGHT (48) HOURS TO UTILITY COMPANIES PRIOR TO STARTING ANY EXCAVATION AS FOLLOWS:

KANSAS ONE-CALL 1-800-344-7233
or 687-2470 (LOCAL WICHITA)

THE CONTRACTOR MUST NOTIFY THE FOLLOWING IN CASE OF AN EMERGENCY:

SOUTHWESTERN BELL TELEPHONE COMPANY	1-800-734-7590
CABLEVISION	263-2061
KGE (GAS & ELECTRIC)	383-8600
CITY OF WICHITA WATER & SEWER MAINTENANCE	268-4908
ARKLA GAS COMPANY	946-0096
CITY OF BEL AIRE (Terry Dreiling)	744-2451

4. RUBBLE FROM THE REMOVAL OF MISCELLANEOUS STRUCTURES AND EXCESS EXCAVATION WHICH IS TO BE WASTED SHALL BE DISPOSED OF ON SITES TO BE PROVIDED BY THE CONTRACTOR. THESE SITES SHALL BE APPROVED BY THE ENGINEER AS TO SUITABILITY, APPEARANCE AND SITE LOCATION. LOCATIONS THAT, IN THE OPINION OF THE ENGINEER, WILL LEAVE AN UNSIGHTLY APPEARANCE WILL NOT BE APPROVED. ALL DISPOSAL SITES MUST BE APPROVED BY THE KANSAS DEPARTMENT OF HEALTH AND ENVIRONMENT. MATERIAL EITHER STOCKPILED OR DISPOSED OF IN A FLOOD PLAIN WOULD REQUIRE A KANSAS STATE BOARD OF AGRICULTURE PERMIT. ANY MATERIAL DUMPED IN WATERS OF THE UNITED STATES OR WETLANDS IS SUBJECT TO U.S. CORPS OF ENGINEERS PERMITTING REGULATIONS. ANY MATERIAL BURIED OR STOCKPILED BEYOND APPROVED CONSTRUCTION LIMITS WOULD REQUIRE ADDITIONAL ARCHEOLOGICAL INVESTIGATIONS UNLESS BURIED IN A PREVIOUSLY APPROVED BORROW LOCATION.

5. COST OF EXCAVATION, HAULING, AND DUMPING OF EXCESS EXCAVATION SHALL BE SUBSIDIARY TO THE PROJECT.

6. A PORTION OF EXCESS EXCAVATED MATERIAL SHALL BE MOUNDED AROUND MANHOLES WHICH EXTEND MORE THAN ONE (1) FOOT ABOVE THE EXISTING GROUND. SUCH MOUNDS SHALL BE CONSTRUCTED WITH A SIX (6) FOOT DIAMETER FLAT TOP WITH 4 TO 1 SIDE SLOPES DOWN TO THE ORIGINAL GROUND. THE ELEVATION OF THE FLAT TOP OF THE MOUND SHALL BE 0.4 FOOT BELOW THE TOP OF THE MANHOLE.

7. ALL STUBS AND PLUGGED PIPES SHALL BE LOCATED WITH GREEN PLASTIC TAPE IN THE SAME MANNER AS RISERS.

8. PRIOR TO LAYING SEWER LINES USING EXISTING STUBS IN EXISTING MANHOLES, THE CONTRACTOR SHALL EXPOSE AND VERIFY THE ELEVATION, GRADE AND ALIGNMENT OF EXISTING STUBS AND NOTIFY THE ENGINEER OF ANY DEVIATION FROM THE PLAN. WHERE CONNECTION TO AN EXISTING MANHOLE THAT DOES NOT HAVE AN EXISTING STUB OR THE STUB IS UNUSABLE DUE TO ELEVATION GRADE OR ALIGNMENT, THE CONTRACTOR SHALL RESHAPE THE EXISTING MANHOLE INVERT TO PROVIDE SMOOTH FLOW. THE COST OF RESHAPING EXISTING MANHOLE INVERTS IS INCIDENTAL TO THE PROJECT.

9. TREES AND SHRUBS IN PUBLIC RIGHT-OF-WAY WHICH ARE IN DIRECT CONFLICT WITH PROPOSED NEW CONSTRUCTION SHALL BE REMOVED BY THE CONTRACTOR WITH THE ENGINEER'S APPROVAL. TREES AND SHRUBS WHICH ARE NOT IN DIRECT CONFLICT WITH PROPOSED NEW CONSTRUCTION SHALL BE SAVED AND PROTECTED FROM DAMAGE.

10. ALL DISTURBED AREAS TO BE SEEDED WITH RYE GRASS AT A RATE OF 200LBS./ ACRE WITHIN 10 DAYS OF CONSTRUCTION. CONTRACTOR TO PREPARE GROUND PER CITY SPEC.

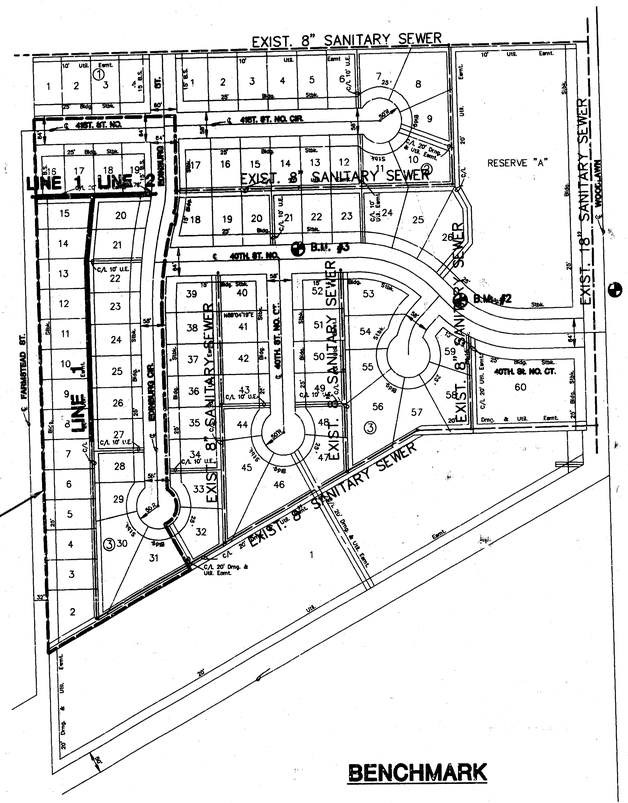

SCALE 1"=150'

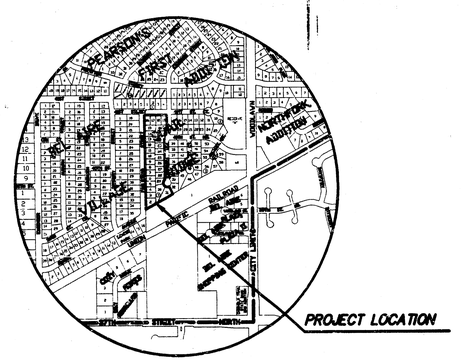

VICINITY MAP

INDEX TO DRAWINGS

SHEET NO.	DESCRIPTION
1	TITLE SHEET
2	MANHOLE DETAILS
3	LINE 1
4	LINE 1 & LINE 2
5	FINAL PLAT

APPROVED AS NOTED
BY CITY ENGINEER OF WICHITA

SANITARY SEWERS_____

STORM SEWERS_____

DRIVEWAY APPROACHED_____

WATER MAINS_____

PAVING_____

NOTE TO CONTRACTOR

INSPECTION AND TESTING FOR THIS PROJECT IS TO BE PROVIDED BY A LICENSED CONSULTING ENGINEERING FIRM UNDER CONTRACT WITH THE OWNER/DEVELOPER. SAID INSPECTION TO BE IN ACCORDANCE WITH THE CITY OF WICHITA STANDARD CONSTRUCTION ENGINEERING PRACTICES AND CERTIFIED BY A LICENSED PROFESSIONAL ENGINEER. NO WORK SHALL BE PERFORMED IN DEDICATED EASEMENTS OR THE PUBLIC RIGHT-OF-WAY BY THE CONTRACTOR WITHOUT SUCH INSPECTION NOR SHALL ANY WORK BE COMMENCED IN DEDICATED EASEMENTS OR PUBLIC RIGHT-OF-WAY WITHOUT WRITTEN AUTHORIZATION BY THE CITY ENGINEER.

BENCHMARK

B.M. #1 COW DISK IN NE COR. RCB UNDER WOODLAWN.
ELEV. = 1374.17

B.M. #2 "T" CUT IN TC N SIDE 40TH ST N OPPOSITE E RETURN 40TH ST N CT. E. ELEV. = 1380.06

B.M. #3 "T" CUT IN TC N SIDE 40TH ST N OPPOSITE E RETURN 40TH ST N CT. W. ELEV. = 1387.55

JEFFREY T. CARTWRIGHT LICENSED 14371 PROFESSIONAL ENGINEER 5-11-98

Booked P-9 5/27/98 R. Loomis

NEWARK CONST.

AS BUILT: 5/11/98
CITY OF WICHITA
PRIVATE PROJECT NO. 760PPS (607861)

MID-KANSAS ENGINEERING CONSULTANTS, INC.
411 N. WEBB ROAD
WICHITA, KS. 67206
316-684-9600

QUAIL RIDGE ADDITION - PHASE 2
PROJECT NAME

SANITARY SEWER PLANS
SHEET TITLE

GJA	KKL	DSS
DESIGN BY:	DRAWN BY:	CHECKED BY:
NOVEMBER 1997	5143_BT	1 / 5
DATE	JOB NO.	SHEET/OF

E:\MIDLAND\5143\SANITARY\PHASE2\5143_P2.DWG Mon May 11 12:17:22 1998

X:\MIDLAND\5143\SANITARY\PHASE2\5143_P2.DWG Mon May 11 12:17:22 1998

SEWER APPURTENANCES DETAILS

ADOPTED AS STANDARD DESIGN BY CITY OF WICHITA

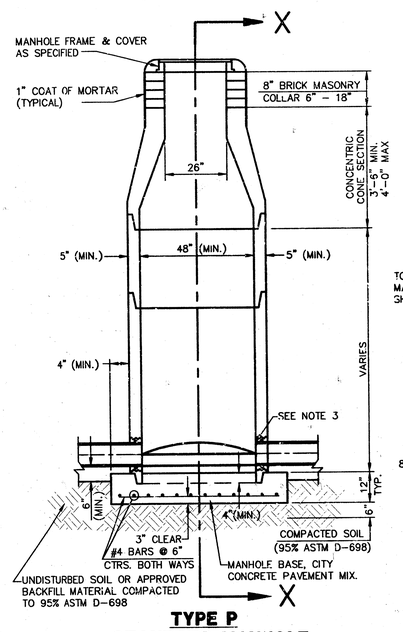

TYPE P
STANDARD MANHOLE

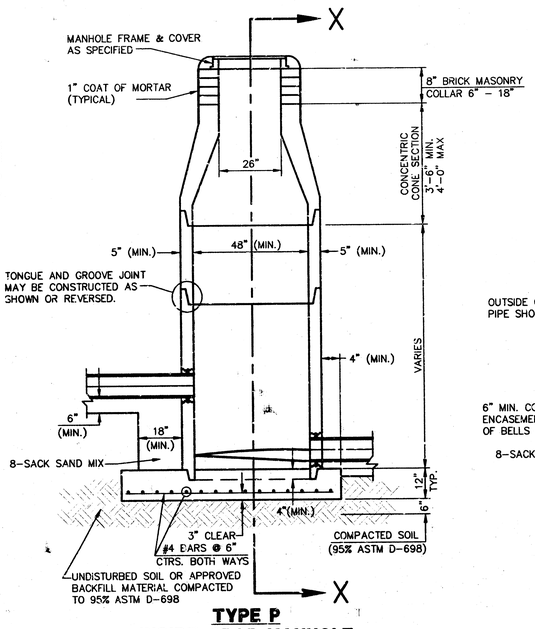

TYPE P
INSIDE DROP MANHOLE

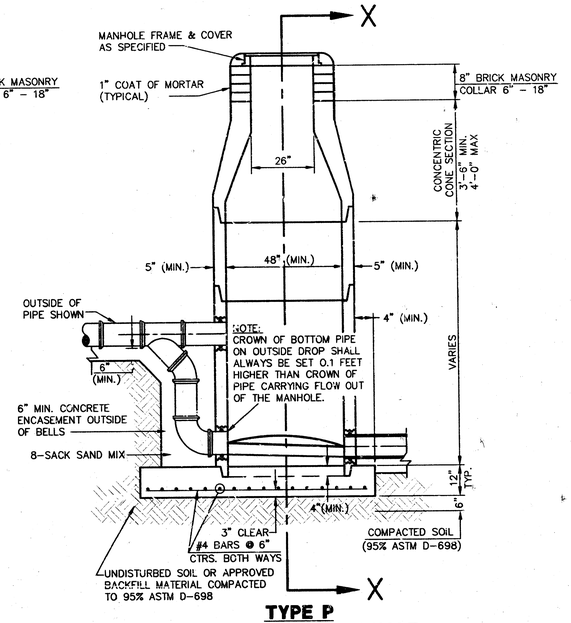

TYPE P
OUTSIDE DROP MANHOLE

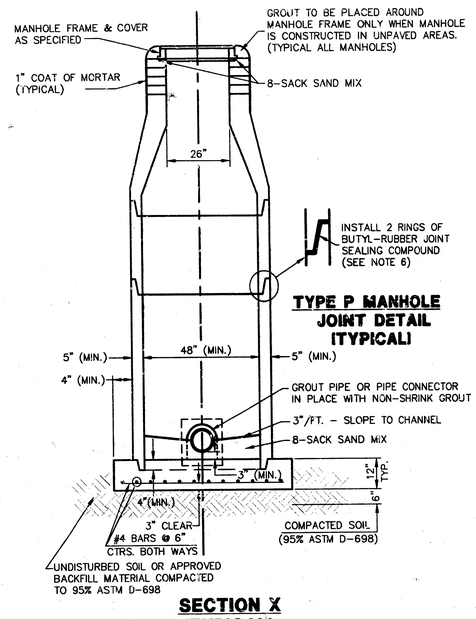

TYPE P MANHOLE
JOINT DETAIL
(TYPICAL)

SECTION X
(TYPICAL)

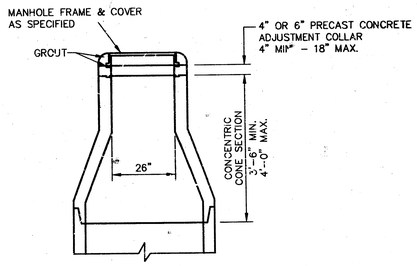

ALTERNATE CONSTRUCTION
IN UNPAVED AREAS

GENERAL NOTES - PRECAST MANHOLE NOTES

1. ALL PRECAST CONCRETE MANHOLE SECTIONS SHALL CONFORM TO THE LATEST REVISIONS OF A.S.T.M. C478 AS MODIFIED BY THE SPECIFICATIONS.
2. NON-SHRINK GROUT SHALL BE NON-METALLIC TYPE.
3. APPROVED FLEXIBLE WATERSTOP GASKETS SHALL BE INSTALLED TO JOIN THE SEWER TO THE MANHOLE WALL WHEN A.B.S. COMPOSITE PIPE OR P.V.C. PIPE IS USED. FOR OTHER TYPES OF PIPE THE SEWER SHALL BE GROUTED IN PLACE WITH NON-SHRINK GROUT. THE SEWER PIPE SHALL BE SUPPORTED WITH CONCRETE ENCASEMENT A MINIMUM OF 3 FEET FROM THE MANHOLE WALL AND TO THE FIRST JOINT FOR V.C.P. SUCH THAT THE JOINT REMAINS FLEXIBLE.
4. ALL INSIDE SURFACES OF THE CONCRETE MANHOLE WHICH WOULD BE EXPOSED TO SEWER GAS SHALL BE COATED WITH 2 COATS TNEMEC SERIES 66 HI-BUILD EPOXOLINE, DRY THICKNESS OF 8 MILS (MIN.)
5. EXTERIOR MANHOLE WALLS SHALL BE COATED WITH 1 COAT MOBILARMA 633 BITUMINUS COATING.
6. JOINT SEALING COMPOUND SHALL BE KENT SEAL NO. 2 OR APPROVED EQUAL.
7. PRECAST MANHOLES SHALL BE SET AT LEAST 4 INCHES INTO THE MANHOLE BASE.
8. TOP OF MANHOLE FLOOR SLAB SHALL BE AT LEAST 3 INCHES BELOW THE FLOW LINE OF THE OUTLET PIPE TO INSURE SUFFICIENT MINIMUM THICKNESS OF SHAPED INVERT.
9. LIFTING HOLES SHALL BE FILLED WITH NON-SHRINK GROUT AND THE INTERIOR SURFACE COATED AS SPECIFIED.
10. MORTAR USED IN MASONRY CONSTRUCTION SHALL CONTAIN 8 SACKS OF CEMENT PER CUBIC YARD. CONCRETE USED IN MANHOLE BASES SHALL CONFORM TO THE REQUIREMENTS OF CONCRETE FOR CONCRETE PAVEMENT CONSTRUCTION AS SPECIFIED IN THE CITY STANDARD PAVING SPECIFICATIONS USING CITY CONCRETE PAVEMENT MIX WITHOUT AIR ENTRAINING ADMIXTURE. MORTAR SHALL BE PLACED AROUND THE MANHOLE RING AS SHOWN ON THE DRAWINGS WHEN MANHOLES ARE CONSTRUCTED IN UNPAVED AREAS. MANHOLES CONSTRUCTED WHERE PIPE SIZES ARE SMALLER THAN 24" SHALL HAVE AN INSIDE DIAMETER OF 4'. MANHOLES CONSTRUCTED WHERE PIPE SIZES ARE 24" OR LARGER SHALL HAVE AN INSIDE DIAMETER OF 5'. COMPLETED MANHOLE SHALL BE WITHOUT LEAKS AND WATER TIGHT.
11. REINFORCING STEEL SHALL BE INSTALLED IN THE MANHOLE BASES AND SHALL CONSIST OF NO. 4 BARS PLACED ON 6" CENTERS IN BOTH DIRECTIONS. THE MANHOLE BASE REINFORCEMENT SHALL BE PLACED AT LEAST 3" ABOVE THE BOTTOM OF THE MANHOLE BASE. ALL COSTS FOR FURNISHING AND INSTALLING REINFORCING STEEL SHALL BE INCLUDED IN THE UNIT PRICE BID FOR THE MANHOLE.
12. OPENINGS SHALL BE CUT INTO THE MANHOLE WALL WHEN OUTSIDE DROPS ARE CONSTRUCTED ON EXISTING MANHOLES. SUCH OPENINGS CUT INTO EXISTING MANHOLES SHALL BE AS SMALL AS PRACTICAL TO FACILITATE INSTALLING AND GROUTING THE NEW PIPE IN PLACE. WATERSTOP GASKETS SHALL BE USED WITH P.V.C. AND A.B.S. COMPOSITE PIPE. THE NEW PIPE SHALL BE GROUTED INTO THE OPENING USING AN APPROVED NONSHRINK GROUT FOR THE FULL MANHOLE WALL THICKNESS. THE EXTERIOR OF THE COMPLETED CONNECTION SHALL BE SEALED WITH AN APPROVED BITUMINOUS COATING SUCH THAT THE CONNECTION WILL BE WATER TIGHT. FLOOR OF MANHOLE SHALL BE MODIFIED TO FORM NEW FLOW CHANNEL FOR THE NEW CONNECTION AS INDICATED BY THE DRAWING. THIS WORK, INCLUDING MODIFICATION OF MANHOLE FLOOR, SHALL BE PAID FOR AT THE UNIT PRICE BID FOR OUTSIDE DROP STACK CONSTRUCTED ON EXISTING MANHOLE.
13. THE FLOORS OF ALL MANHOLES SHALL BE SHAPED WITH FLOW CHANNEL, SUCH THAT THE MANHOLES WILL BE SELF CLEANING AND FREE OF AREAS WHERE SOLIDS COULD BE DEPOSITED AS SEWAGE FLOWS THROUGH THE MANHOLE FROM ALL INLET PIPES TO THE OUTLET PIPE. FLOW CHANNELS SHALL BE FORMED TO MATCH THE BOTTOM HALVES OF THE INFLOWING PIPES AND THE OUTFLOWING PIPE AS SHOWN BY THE DRAWINGS EXCEPT FOR INSIDE DROP MANHOLES. FLOW CHANNELS FOR INSIDE DROP MANHOLES SHALL BE CONSTRUCTED AS INDICATED BY THE DRAWING. MANHOLE FLOORS SHALL HAVE SLOPES OF 3 INCHES PER FOOT IN THE AREAS OUTSIDE OF THE FLOW CHANNELS SLOPED TOWARD THE FLOW CHANNELS. PIPES LAID THROUGH MANHOLES SHALL HAVE THE TOP HALF REMOVED TO NEAT LINES FOR THE FULL INSIDE DIAMETER OF THE MANHOLE. MANHOLE FLOORS SHALL THEN BE SHAPED AROUND THE BOTTOM HALF OF THE PIPE WHICH FORMS THE FLOW CHANNEL.
14. PIPES INSTALLED WITHIN THE EXCAVATION MADE FOR THE MANHOLE SHALL BE CRADLED WITH CONCRETE TO THE LIMITS OF THE MANHOLE EXCAVATION. WHEN CLAY PIPE IS USED, THE CRADLE SHALL EXTEND TO THE FIRST JOINT OUTSIDE THE MANHOLE. THE CRADLE SHALL BE TERMINATED AT THE CLAY PIPE JOINT IN A MANNER WHICH WILL MAINTAIN THE FLEXIBILITY OF THE JOINT. COST OF CRADLE WITHIN MANHOLE EXCAVATION OR TO CLAY PIPE JOINTS ADJACENT TO MANHOLE SHALL BE INCLUDED IN THE UNIT PRICE BID FOR THE MANHOLE.
15. MANHOLE COVER CASTINGS AND MANHOLE FRAME CASTINGS SHALL CONFORM TO THE REQUIREMENTS AS INDICATED IN THE STANDARD SPECIFICATIONS AND AS SHOWN IN THE STANDARD DETAIL DRAWING.
16. THE VERTICAL DROP IN INSIDE DROP MANHOLES SHALL NOT EXCEED 2' FOR INFLOWING PIPES. THE CROWNS OF INFLOWING PIPES SHALL NEVER BE SET LOWER THAN THE CROWN OF THE OUTFLOWING PIPE.
17. STANDARD MANHOLES AND STANDARD INSIDE DROP MANHOLES SHALL BE BID AS STANDARD MANHOLES FOR THE TYPE AND DIAMETER INDICATED. OUTSIDE DROP MANHOLES SHALL BE BID AS STANDARD OUTSIDE DROP MANHOLES FOR THE TYPE AND DIAMETER INDICATED. ALL MANHOLE DIAMETERS WILL BE 4' UNLESS INDICATED OTHERWISE.
18. A BRICK MASONRY COLLAR SHALL BE INSTALLED BETWEEN THE CAST IRON FRAME AND THE CONCENTRIC CONE. THE COLLAR WILL HAVE 8" WALLS AND A VERTICAL HEIGHT OF 6" MINIMUM AND 18" MAXIMUM. A 1" COAT OF MORTAR WILL BE PLASTERED ON THE OUTSIDE OF THE COLLAR.

REVISED: 6-12-86

MANHOLE DETAILS

CITY OF BEL AIRE, KANSAS

Design	Checked by	Checked by	2 / 5
Drawn by M.K.E.C.	Date	Date JAN. 1997	Job No. 5143_BD

G:\BELAIRE\95143\SAN\PW2\5143_BD Thu Dec 11 11:33:21 1997

G:\BELAIRE\95143\SAN\95143_BD.DWG

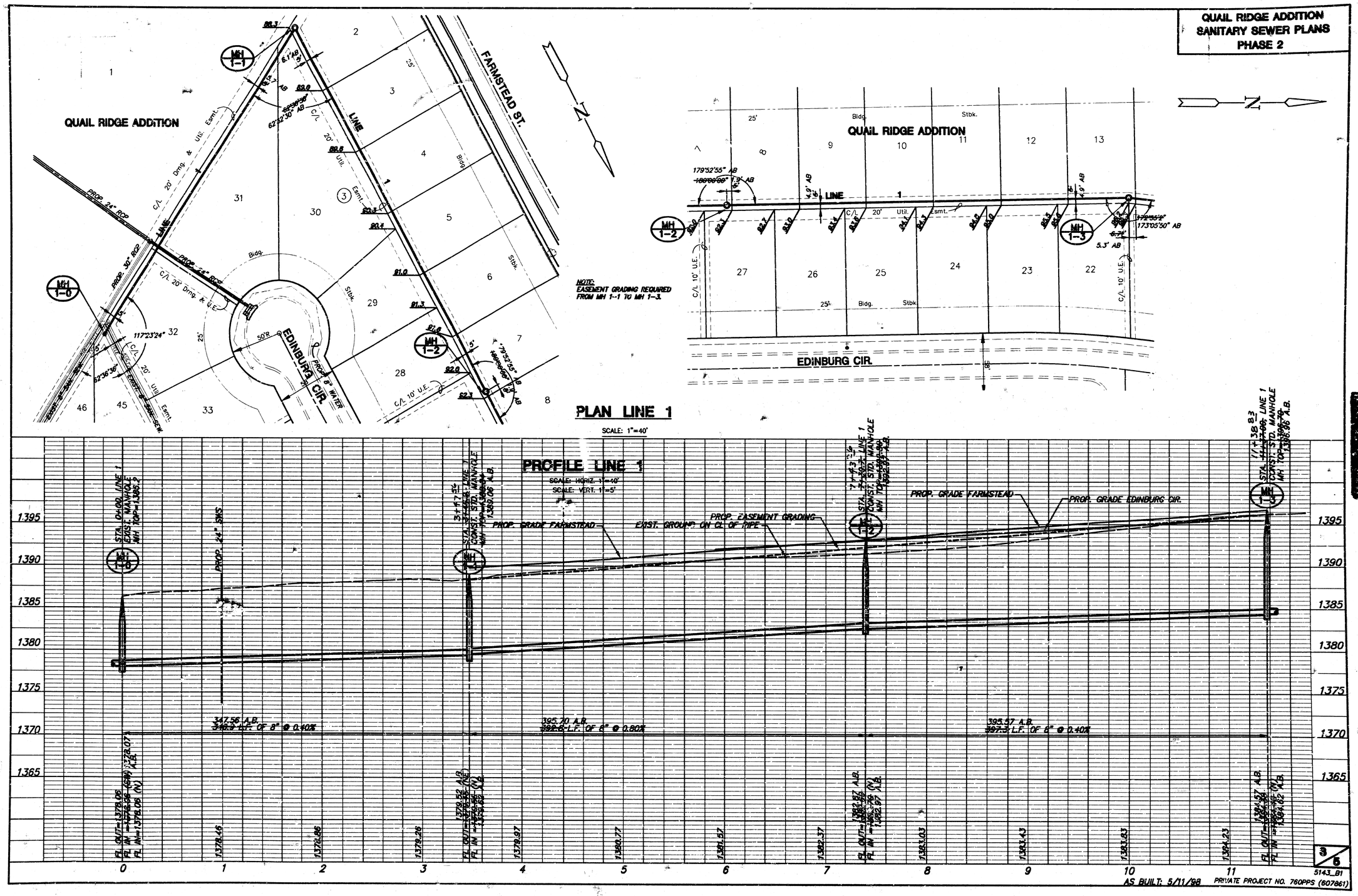

I:\BELAIRE\95143\SAN\PH2\5143_B1.DWG Mon May 11 12:19:55 1998

QUAIL RIDGE ADDITION
SANITARY SEWER PLANS
PHASE 2

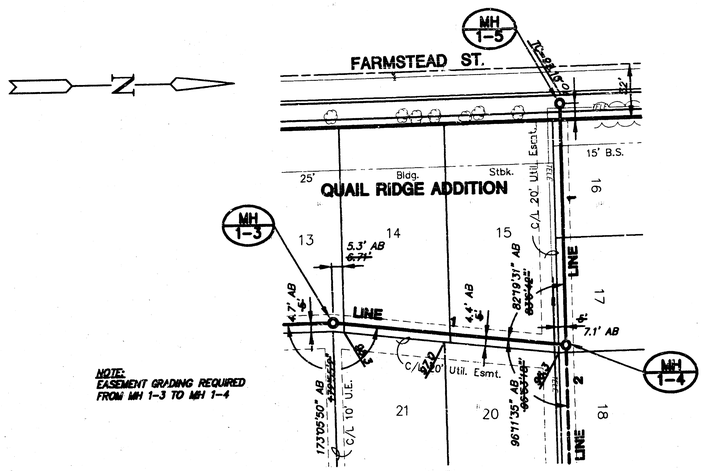

NOTE:
EASEMENT GRADING REQUIRED FROM MH 1-3 TO MH 1-4

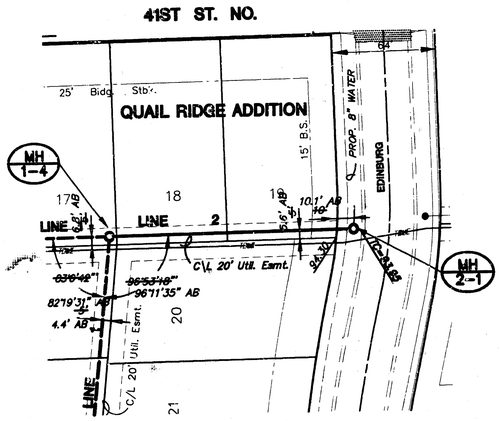

N

PLAN LINE 1

SCALE: 1"=40'

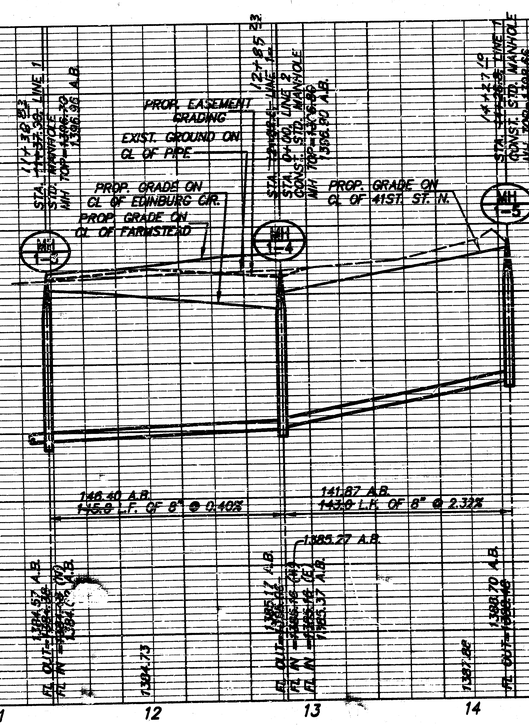

PROFILE LINE 1

SCALE: HORIZ. 1"=40'
SCALE: VERT. 1"=5'

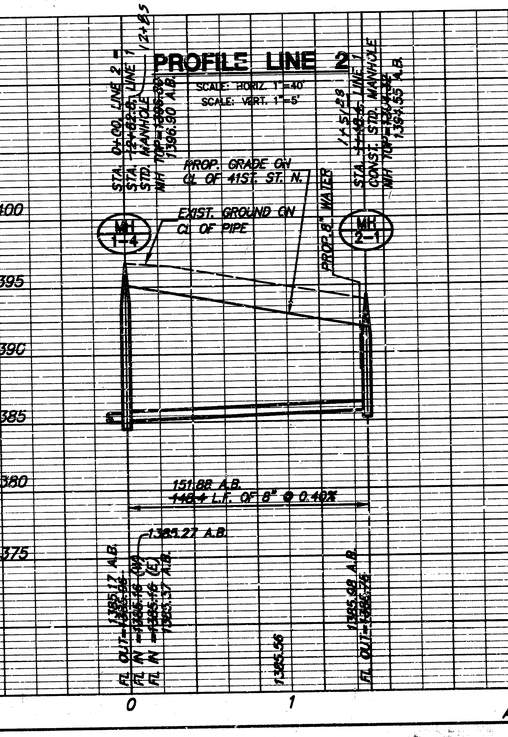

PLAN LINE 2

SCALE: 1"=40'

PROFILE LINE 2

SCALE: HORIZ. 1"=40'
SCALE: VERT. 1"=5'

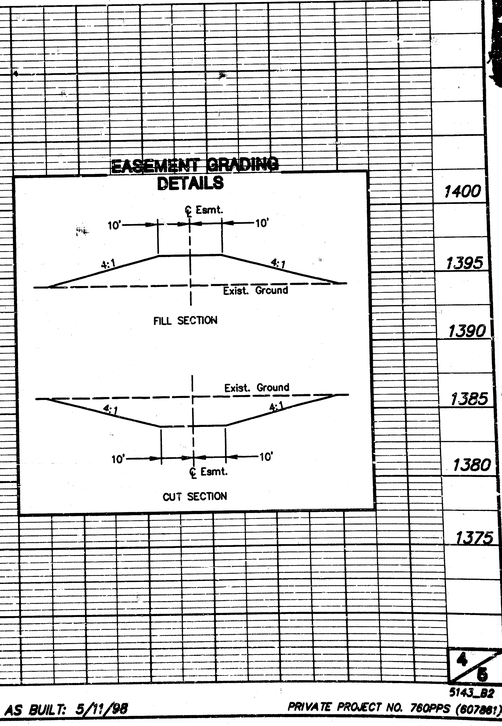

EASEMENT GRADING DETAILS

4/5

5143_B2

AS BUILT: 5/11/98

PRIVATE PROJECT NO. 760PPS (607861)

PC66-10

FINAL PLAT OF
QUAIL RIDGE ADDITION
AN ADDITION TO BEL AIRE, SEDGWICK COUNTY, KANSAS

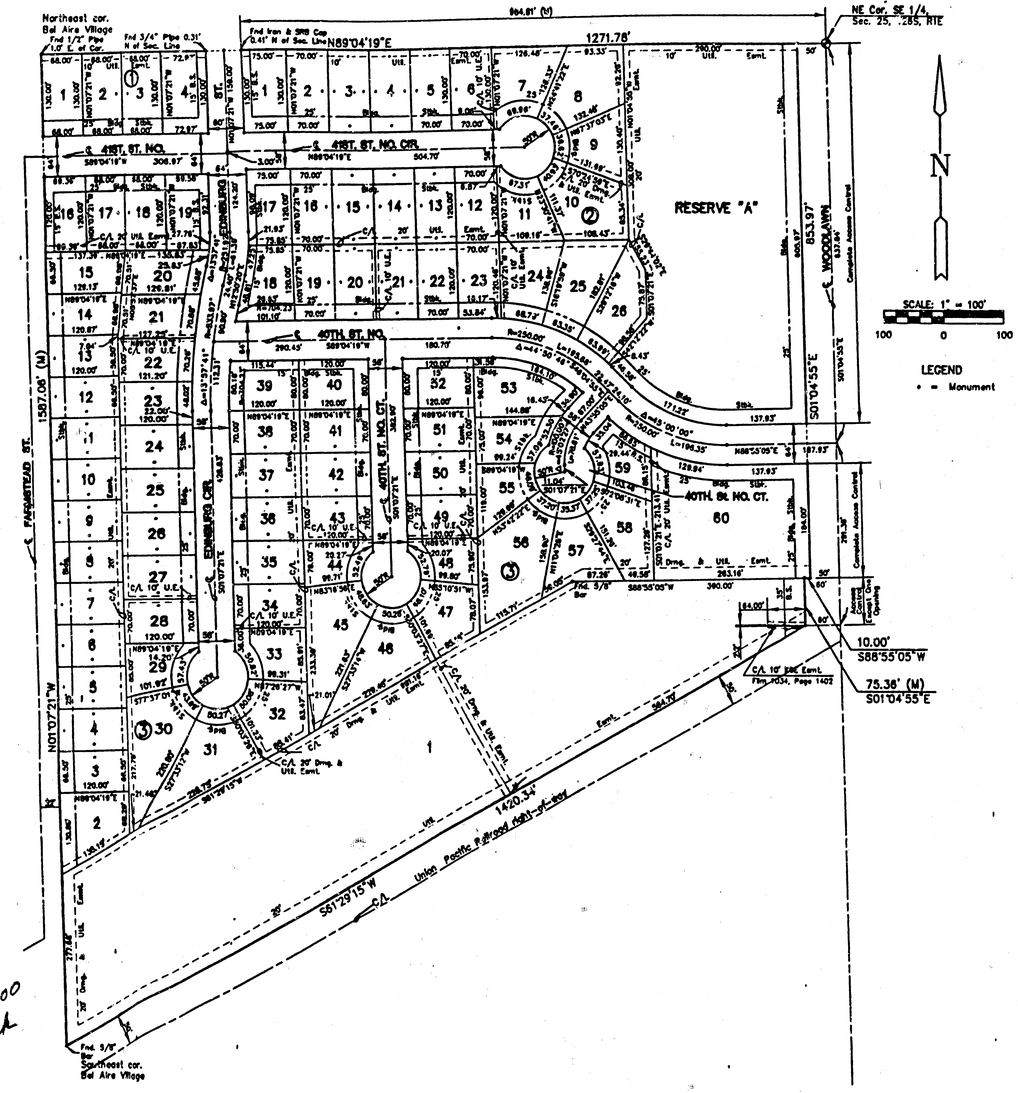

I, Kenneth H. Bengtson, a Civil Engineer and Registered Land Surveyor in Kansas, do hereby certify that I have been in responsible charge of surveying and plotting of "QUAIL RIDGE ADDITION", an addition to Bel Aire, Sedgwick County, Kansas, into lots, blocks, streets and a reserve the same being accurately set forth in the accompanying plat and described herein:

The East Half of the Southeast Quarter lying North of the Union Pacific Railroad Right of Way, in Section 25, Township 28, Range 1 East of the 6th. P.M., Sedgwick County, Kansas, more particularly described as follows:

Beginning at a point on the North line of said Southeast Quarter and 50.00 feet West of the Northeast corner of said Southeast Quarter; thence S 01° 04' 55" E, 853.97 feet parallel and 50.00 feet West of the East line of said Southeast Quarter; thence S 88° 55' 05" W, 10.00 feet to the Northeast corner of Lot 1, Block 1 SHENK'S SECOND ADDITION, an addition to Bel Aire, Sedgwick County, Kansas; thence S 01° 04' 55" E, 75.36 feet along the East line to the Southeast corner of said Lot 1, said point also being the North line of the Union Pacific Railroad right of way; thence S 61° 29' 15" W, 1420.34 feet along said North right of way line to the Southeast corner of BEL AIRE VILLAGE, an addition to Sedgwick County, Kansas, thence N 01° 07' 21" W, 1587.06 feet along the East line to the Northeast corner of said BEL AIRE VILLAGE, said point also lying on the North line of said Southeast Quarter; thence N 89° 04' 19" E, 1271.78 feet along said North line to the point of beginning.

All lots, blocks, easements, and building setbacks within the above described property are being vacated and replatted by virtue of K.S.A. 12-512(b).

I hereby certify that the details of this plat are correct to the best of my knowledge and belief this 6 day of May 1996.

Kenneth H. Bengtson, P.E., R.L.S. #922
Mid-Kansas Engineering Consultants, Inc.
411 North Webb Road
Wichita, KS 67206

KENNETH H. BENGTSON LICENSED PROFESSIONAL ENGINEER 7238 KANSAS

KENNETH H. BENGTSON REGISTERED LAND SURVEYOR LS-922 KANSAS

Know all men by these presents that we the undersigned, property owners of the land as above set forth in the Civil Engineer's and Registered Land Surveyor's Certificate, have caused the same to be surveyed and platted into lots, blocks, streets and a reserve the same to be known as "QUAIL RIDGE ADDITION", an addition to Bel Aire, Sedgwick County, Kansas. The streets are dedicated to and for the use of the public. Easements for the construction and maintenance of public utilities and drainage, are hereby granted to the public. Reserve A is platted for construction and maintenance of lighting, landscaping, irrigation, entry monuments, and public drainage and lakes. Reserve A is hereby dedicated to and for the use of the public. The Reserve shall be owned and maintained by the governing body. All abutters right of access to or from Woodlawn over and across the East line of Reserve "A" and Lot 60, Block 3, QUAIL RIDGE ADDITION, are hereby granted to the City of Bel Aire.

CPA, INC.

William D. Cox, President

K.C. Buck Alley, Secretary

STATE OF KANSAS } ss.
SEDGWICK COUNTY }

BE IT REMEMBERED, that on this 1th day of May 1996, before me the undersigned, a Notary Public in and for the County and State aforesaid, came William D. Cox, President, and K.C. "Buck" Alley, Secretary for CPA, INC., to me personally known to be the same persons who executed the foregoing instrument of writing and duly acknowledged the execution of the same.

IN WITNESS WHEREOF, I have hereunto set my hand and affixed my official seal, the day and year last above written.

Kathryn A Bauman
Notary Public

My appointment expires: 1-24-99

KATHRYN S. BAUMAN NOTARY PUBLIC STATE OF KANSAS My Appt. Expires

We, Chisholm Trail State Bank, holders of a mortgage on the above described property, do hereby consent to the plat of "QUAIL RIDGE ADDITION".

Chisholm Trail State Bank

Kathleen Steward, President

STATE OF KANSAS } ss.
SEDGWICK COUNTY }

BE IT REMEMBERED, that on this 20th day of June 1996, before me the undersigned, a Notary Public in and for the County and State aforesaid, came KATHLEEN STEWARD, President/Chief Executive Officer to me personally known to be the same person who executed the foregoing instrument of writing and duly acknowledged the execution of the same.

IN WITNESS WHEREOF, I have hereunto set my hand and affixed my official seal, the day and year last above written.

Sherrell L. Anderson
Notary Public

My appointment expires: 9-13-96

SHERRELL L. ANDERSON Notary Public - State of Kansas My Appt. Expires 9-13-96

CITY OF BEL AIRE

Harold Smith, Mayor

STATE OF KANSAS } ss.
SEDGWICK COUNTY }

BE IT REMEMBERED, that on this 18 day of June 1996, before me the undersigned, a Notary Public in and for the County and State aforesaid, came Harold Smith, Mayor of the City of Bel Aire to me personally known to be the same person who executed the foregoing instrument of writing and duly acknowledged the execution of the same.

IN WITNESS WHEREOF, I have hereunto set my hand and affixed my official seal, the day and year last above written.

Sherrell L Cutler
Notary Public

SHERRELL L. CUTLER NOTARY PUBLIC STATE OF KANSAS My Appt. Expires 10-10-98

My appointment expires: October 10, 1998

This plat of "QUAIL RIDGE ADDITION", has been submitted to and approved by the Bel Aire Planning Commission, Bel Aire, Kansas.

Dated this 8th day of April 1996.

BEL AIRE PLANNING COMMISSION

Beverly K. Dunning, Chairman

Betty L. Martine, Secretary

CITY OF BEL AIRE, KANSAS — CITY OF THE FUTURE WITH RESPECT FOR ITS PAST — Settled by Pioneers

This plat approved and all dedications shown thereon, if any, accepted by the City Council of the City of Bel Aire, Kansas, this 2nd day of May 1996.

Harold Smith, Mayor

Sherryl L Cutler, City Clerk

CITY OF BEL AIRE, KANSAS — CITY OF THE FUTURE WITH RESPECT FOR ITS PAST — Settled by Pioneers

Entered on transfer record this 24th day of June 1996.

Susan E. Crockett-Sapon, County Clerk

STATE OF (KANSAS) } ss:
SEDGWICK COUNTY }

This is to certify that this instrument was filed for record in the Register of Deeds office this 25th day of June 1996.

Pat Kettler, Register of Deeds

Phyllis Hernandez, Deputy

#1536766

REGISTER OF DEEDS SEDGWICK COUNTY KANSAS

PC66-10