1359 PPS
SS
Dowdinger

PUBLIC IMPROVEMENT PLANS FOR

QUIKTRIP STORE #396

WICHITA, KS

MAPLE STREET & WEST STREET

PRIVATE PROJECT NO: 1359 PPS (607861)

CITY OF WICHITA, KANSAS

NEIL CABLE, P.E., CITY ENGINEER

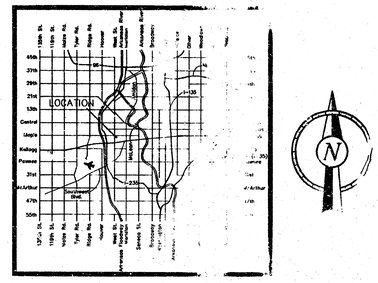

Vicinity Map
Not to Scale

GENERAL NOTES:

1. UNLESS SHOWN OR STATED OTHERWISE ON THESE DRAWINGS, MATERIALS AND CONSTRUCTION SHALL BE IN ACCORDANCE WITH CITY OF WICHITA CONCRETE PAVEMENT AND ASPHALTIC CONCRETE PAVEMENT SPECIFICATIONS.

2. THE CONTRACTOR SHALL BE RESPONSIBLE FOR PRESERVING PROPERTY IRONS. THE CONTRACTOR WILL BE REQUIRED TO RE-ESTABLISH ANY PROPERTY IRONS WHICH ARE DAMAGED OR DESTROYED BY HIS CONSTRUCTION OPERATIONS. SUCH IRONS SHALL BE RE-ESTABLISH BY A LICENSED LAND SURVEYOR IN ACCORDANCE WITH STATE LAWS.

3. EXISTING UTILITIES AND THIER LOCATIONS AS SHOWN ON THE PLANS REPRESENT THE BEST INFORMATIONS OBTAINABLE FOR DESIGN. LOCATION INFORMATION HAS BEEN OBTAINED FROM THE VARIOUS UTILITY COMPANIES AND IS EITHER FROM COMPANY RECORD DRAWINGS OR COMPANY PROVIDED FIELD LOCATIONS. THE PLAN LOCATIONS SHOWN ARE NOT GUARANTEED. ADDITIONAL EXISTING UTILITIES MAY ALSO BE ENCOUNTERED.

4. CONTRACTOR WILL BE REQUIRED TO PROVIDE A MINIMUM ADVANCE NOTICE OF FORTY-EIGHT (48) HOURS TO UTILITY COMPANIES PRIOR TO STARTING ANY EXCAVATION AS FOLLOWS:

KANSAS ONE-CALL 1-800-344-7233
687-2470 (LOCAL WICHITA)
THE CONTRACTOR MUST NOTIFY THE FOLLOWING IN CASE OF AN EMERGENCY:

SOUTHWESTERN BELL TELEPHONE COMPANY	1-800-734-7590
CABLE VISION	262-0661
KG&E (GAS)	832-012
KG&E (ELECTRIC)	284-1141
CITY OF WICHITA WATER & SEWER DEPT.	268-4909

5. RUBBLE FROM THE REMOVAL OF MISCELLANEOUS STRUCTURES AND EXCESS EXCAVATION WHICH IS TO BE WASTED SHALL BE DISPOSED OF ON SITES TO BE PROVIDED BY THE CONTRACTOR. THESE SITES SHALL BE APPROVED BY THE ENGINEER AS TO SUITABILITY, APPEARANCE AND SITE LOCATION. LOCATIONS THAT, IN THE OPINION OF THE ENGINEER, WILL LEAVE AN UNSIGHTLY APPEARANCE WILL NOT BE APPROVED. ALL DISPOSAL SITES MUST BE APPROVED BY THE KANSAS DEPARTMENT OF HEALTH AND ENVIRONMENT. MATERIAL EITHER STOCKPILED OR DISPOSED OF IN A FLOOD PLAIN WOULD REQUIRE A KANSAS STATE BOARD OF AGRICULTURE PERMIT. ANY MATERIAL DUMPED IN WATERS OF THE UNITED STATES OR WETLAND IS SUBJECT TO U.S. CORPS OF ENGINEERS PERMITTING REGULATIONS. ANY MATERIAL BURIED OR STOCKPILED BEYOND APPROVED CONSTRUCTION LIMITS WOULD REQUIRED ADDITIONAL ARCHAEOLOGICAL INVESTIGATIONS UNLESS BURIED IN A PREVIOUSLY APPROVED BORROW LOCATION.

6. A SAW CUT OF AT LEAST ONE-HALF THE DEPTH OF THE EXISTING SURFACE COURSES OR ONE-FOURTH THE DEPTH OF THE EXISTING TOTAL PAVEMENT THICKNESS SHALL BE PROVIDED AT LOCATIONS WHERE PROPOSED CONSTRUCTION ABUTS AN EXISTING SURFACE OR PAVEMENT FOR WHICH PARTIAL REMOVAL OF THE SURFACE OR PAVEMENT IS REQUIRED. SAW JOINT TO FACILITATE REMOVAL WITHIN THREE (3) FEET OF EXISTING JOINTS WILL NOT BE PERMITTED AND FOR SUCH INSTANCES THE LIMITS OF REMOVAL SHALL EXTEND TO THE EXISTING JOINT. SUCH SAW CUTS WILL NOT BE PAID FOR DIRECTLY AND THIS COST SHALL BE CONSIDERED AS SUBSIDIARY TO THE REMOVAL OF SURFACE OF PAVEMENT.

7. ALL DISTURBED AREA TO BE SEEDED WITH RYE GRASS AT A RATE OF 200LBS. / ACRE WITHIN 10 DAYS OF CONSTRUCTION. COST SHALL BE CONSIDERED AS SUBSIDIARY TO SITE PREPARATION & RESTORATION.

APPROVED AS NOTED
BY CITY ENGINEER OF WICHITA

SANITARY SEWER VR 11 7/10/03

NOTE TO CONTRACTOR

INSPECTION AND TESTING FOR THIS PROJECT IS TO BE PROVIDED BY A LICENSED CONSULTING ENGINEERING FIRM UNDER CONTRACT WITH THE OWNER/DEVELOPER. SAID INSPECTION TO BE IN ACCORDANCE WITH THE CITY OF WICHITA STANDARD CONSTRUCTION CONSTRUCTION ENGINEERING PRACTICES AND CERTIFIED BY A LICENSED PROFESSIONAL ENGINEER. NO WORK SHALL BE PERFORMED IN DEDICATED EASEMENTS OR THE PUBLIC RIGHT-OF-WAY BY THE CONTRACTOR WITHOUT SUCH INSPECTION NOR SHALL ANY WORK BE COMMENCED IN DEDICATED EASEMENTS OR PUBLIC RIGHT-OF-WAY WITHOUT WRITTEN AUTHORIZATION BY THE CITY ENGINEER.

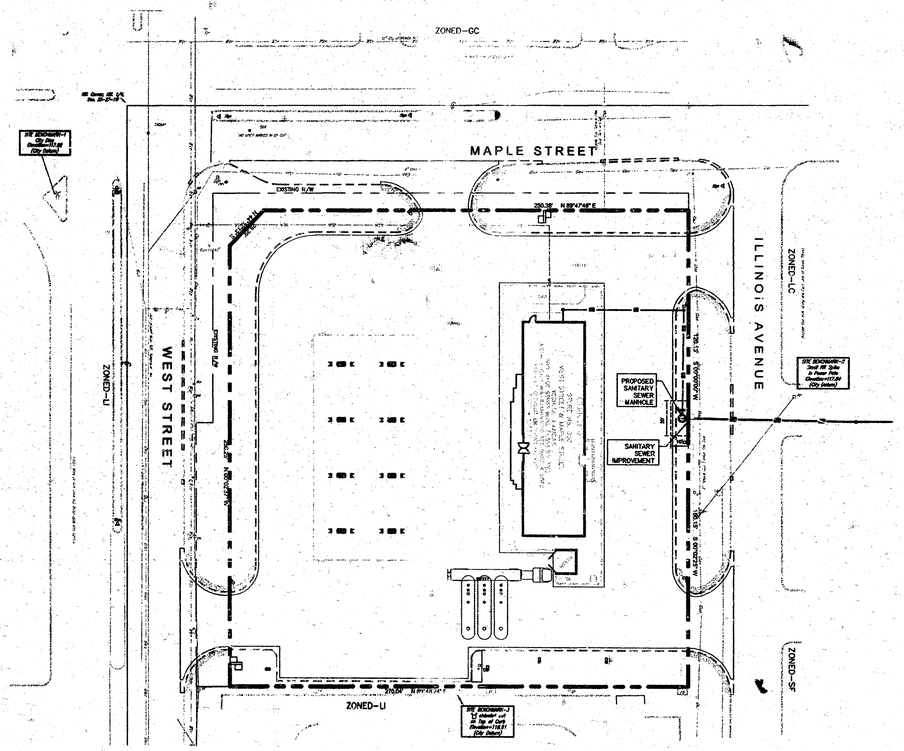

N.T.S.

INDEX TO DRAWINGS

SHEET NO.	DESCRIPTION
1	TITLE SHEET
2	PLAN
3	DETAILS

BENCHMARKS

BENCHMARK #1:

City Disc in center of island median located at the southwest corner of the intersection of West Street and Maple Street.
Elev.=117.02 (City Datum)

BENCHMARK #2:

Small rail road spike in power pole located on the east side of Illinois Avenue and (165 feet south of the centerline of Maple Street.
Elev.=117.84 (City Datum)

BENCHMARK #3:

Chiseled square cut on top of curb (175 feet west of the centerline of Illinois Avenue and (330 feet south of the centerline of Maple Street.
Elev.=118.61 (City Datum)

RDL
1/9/04
.PDF

RECORD DRAWING
12 DEC 2003

INITIAL DESIGN	5-21-03	TJB	FSN	KSK	KSK
	DATE	PRN	PM	DES	DRW

QUIKTRIP STORE #396
PUBLIC IMPROVEMENT PLANS

CEI ENGINEERING ASSOCIATES, INC
ENGINEERS • PLANNERS • SURVEYORS

12300 Ford Road, Suite 110
Dallas, TX 75235
(972) 488-3737
FAX (972) 488-6732

JOB NO.: 396
DWG NAME: 396 SEWER

SANITARY SEWER IMPROVEMENT
MAPLE ST. & WEST ST.
WICHITA KANSAS

DATE 07-28-03 3:24 PM REV-1

SHEET NO. 1 OF 3

8/6/03

MAPLE STREET

ILLINOIS AVENUE

Acquila Gas Main along the East side of Illinois Street

Acquila Gas Main along the East side of Illinois Street

Gas Service Line

Gas

Gas

Gas

SEWER APPURTENANCES DETAILS

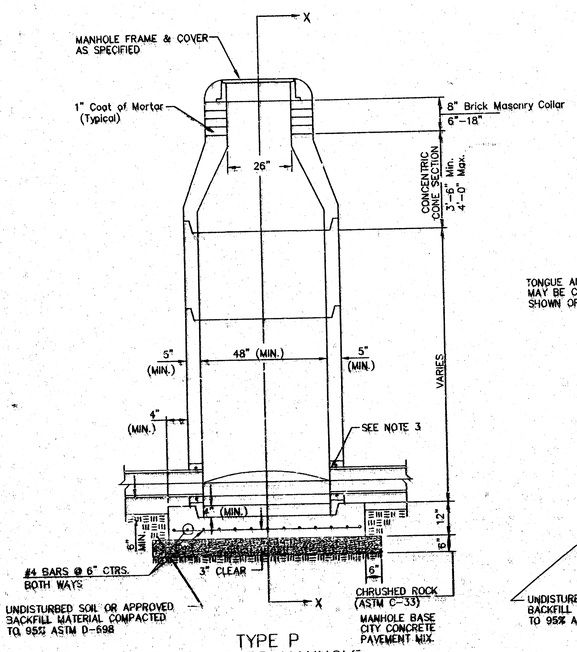

TYPE P
STANDARD MANHOLE

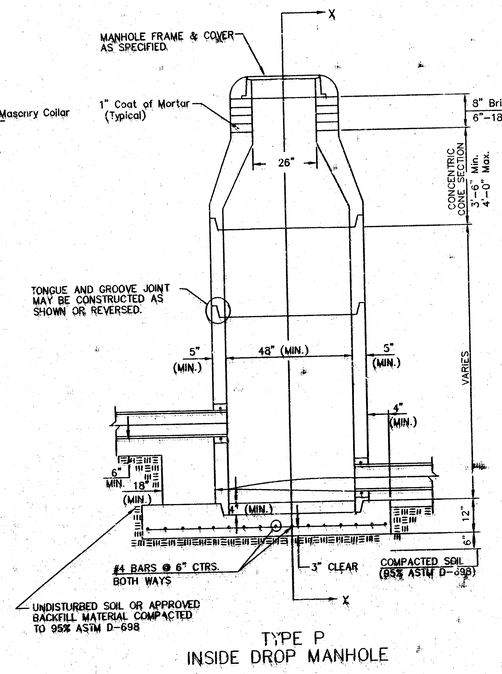

TYPE P
INSIDE DROP MANHOLE

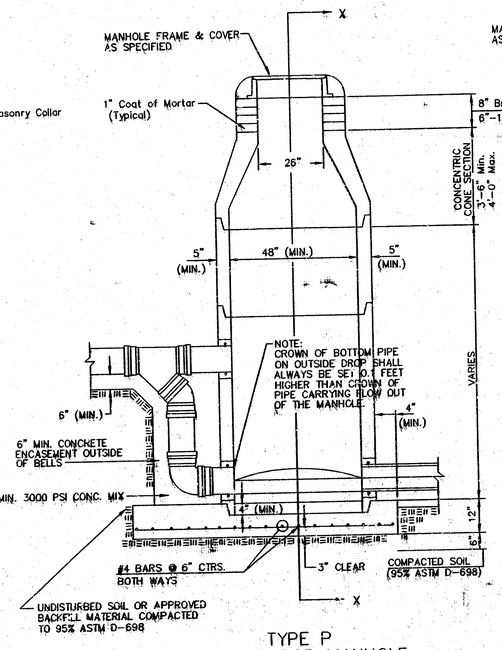

TYPE P
OUTSIDE DROP MANHOLE

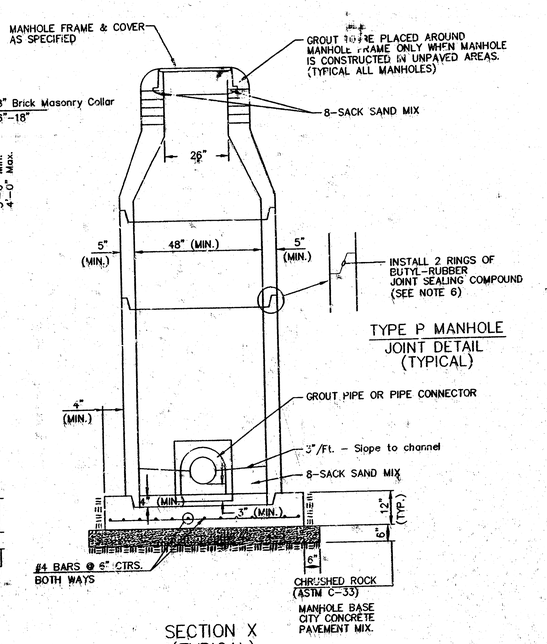

TYPE P MANHOLE
JOINT DETAIL
(TYPICAL)

SECTION X
(TYPICAL)

GENERAL NOTES

PRECAST MANHOLE NOTES

1. ALL PRECAST CONCRETE MANHOLE SECTIONS SHALL CONFORM TO THE LATEST REVISIONS OF A.S.T.M. C478 AS MODIFIED BY THE SPECIFICATIONS.
2. NON-SHRINK GROUT SHALL BE NON-METALLIC TYPE.
3. APPROVED FLEXIBLE WATERSTOP GASKETS SHALL BE INSTALLED TO JOIN THE SEWER TO THE MANHOLE WALL WHEN A.B.S. COMPOSITE PIPE OR P.V.C. PIPE IS USED. FOR OTHER TYPES OF PIPE THE SEWER SHALL BE GROUTED IN PLACE WITH NON-SHRINK GROUT. THE SEWER PIPE SHALL BE SUPPORTED WITH CONCRETE ENCASEMENT A MINIMUM OF 3 FEET FROM THE MANHOLE WALL AND TO THE FIRST JOINT FOR V.C.P. SUCH THAT THE JOINT REMAINS FLEXIBLE.
4. ALL INSIDE SURFACES OF THE CONCRETE MANHOLE WHICH WOULD BE EXPOSED TO SEWER GAS SHALL BE COATED WITH 2 COATS TNEMEC SERIES 66 HI-BUILD EPOXOLINE, DRY THICKNESS OF 8 MILS (MIN.)
5. EXTERIOR MANHOLE WALLS SHALL BE COATED WITH 1 COAT MOBILARMA 633 BITUMINOUS COATING.
6. JOINT SEALING COMPOUND SHALL BE KENT SEAL NO. 2 OR APPROVED EQUAL.
7. PRECAST MANHOLES SHALL BE SET AT LEAST 4 INCHES INTO THE MANHOLE BASE.
8. TOP OF MANHOLE FLOOR SLAB SHALL BE AT LEAST 3 INCHES BELOW THE FLOW LINE OF THE OUTLET PIPE TO INSURE SUFFICIENT MINIMUM THICKNESS OF SHAPED INVERT.
9. LIFTING HOLES SHALL BE FILLED WITH NON-SHRINK GROUT AND THE INTERIOR SURFACE COATED AS SPECIFIED.
10. MORTAR USED IN MASONRY CONSTRUCTION SHALL CONTAIN 6 SACKS OF CEMENT PER CUBIC YARD. CONCRETE USED IN MANHOLE BASES SHALL CONFORM TO THE REQUIREMENTS OF CONCRETE FOR CONCRETE PAVEMENT CONSTRUCTION AS SPECIFIED IN THE CITY STANDARD PAVING SPECIFICATIONS USING CITY CONCRETE PAVEMENT MIX WITHOUT AIR ENTRAINING ADMIXTURE. MORTAR SHALL BE PLACED AROUND THE MANHOLE RING AS SHOWN ON THE DRAWINGS WHEN MANHOLES ARE CONSTRUCTED IN UNPAVED AREAS. MANHOLES CONSTRUCTED WHERE PIPE SIZES ARE SMALLER THAN 24" SHALL HAVE AN INSIDE DIAMETER OF 4'. MANHOLES CONSTRUCTED WHERE PIPE SIZES ARE 24" OR LARGER SHALL HAVE AN INSIDE DIAMETER OF 5'. COMPLETED MANHOLE SHALL BE WITHOUT LEAKS AND WATER TIGHT.
11. REINFORCING STEEL SHALL BE INSTALLED IN THE MANHOLE BASES AND SHALL CONSIST OF NO. 4 BARS PLACED ON 6" CENTERS IN BOTH DIRECTIONS. THE MANHOLE BASE REINFORCEMENT SHALL BE PLACED AT LEAST 3" ABOVE THE BOTTOM OF THE MANHOLE BASE. ALL COSTS FOR FURNISHING AND INSTALLING REINFORCING STEEL SHALL BE INCLUDED IN THE UNIT PRICE BID FOR THE MANHOLE.
12. OPENINGS SHALL BE CUT INTO THE MANHOLE WALL WHEN OUTSIDE DROPS ARE CONSTRUCTED ON EXISTING MANHOLES. SUCH OPENINGS CUT INTO EXISTING MANHOLES SHALL BE AS SMALL AS PRACTICAL TO FACILITATE INSTALLING AND GROUTING THE NEW PIPE IN PLACE. WATERSTOP GASKETS SHALL BE USED WITH P.V.C. AND A.B.S. COMPOSITE PIPE. THE NEW PIPE SHALL BE GROUTED INTO THE OPENING USING AN APPROVED NONSHRINK GROUT FOR THE FULL MANHOLE WALL THICKNESS. THE EXTERIOR OF THE COMPLETED CONNECTION SHALL BE SEALED WITH AN APPROVED BITUMINOUS COATING SUCH THAT THE CONNECTION WILL BE WATER TIGHT. FLOOR OF MANHOLE SHALL BE MODIFIED TO FORM NEW FLOW CHANNEL FOR THE NEW CONNECTION AS INDICATED BY THE DRAWING. THIS WORK, INCLUDING MODIFICATION OF MANHOLE FLOOR, SHALL BE PAID FOR AT THE UNIT PRICE BID FOR OUTSIDE DROP STACK CONSTRUCTED ON EXISTING MANHOLE.
13. THE FLOORS OF ALL MANHOLES SHALL BE SHAPED WITH FLOW CHANNELS SUCH THAT THE MANHOLES WILL BE SELF CLEANING AND FREE OF AREAS WHERE SOLIDS COULD BE DEPOSITED AS SEWAGE FLOWS THROUGH THE MANHOLE FROM ALL INLET PIPES TO THE OUTLET PIPE. FLOW CHANNELS SHALL BE FORMED TO MATCH THE BOTTOM HALVES OF THE INFLOWING PIPES AND THE OUTFLOWING PIPE AS SHOWN BY THE DRAWINGS EXCEPT FOR INSIDE DROP MANHOLES. FLOW CHANNELS FOR INSIDE DROP MANHOLES SHALL BE CONSTRUCTED AS INDICATED BY THE DRAWING. MANHOLE FLOORS SHALL HAVE SLOPES OF 3 INCHES PER FOOT IN THE AREAS OUTSIDE OF THE FLOW CHANNELS SLOPED TOWARD THE FLOW CHANNELS. PIPES LAID THROUGH MANHOLES SHALL HAVE THE TOP HALF REMOVED TO NEAT LINES FOR THE FULL INSIDE DIAMETER OF THE MANHOLE. MANHOLE FLOORS SHALL THEN BE SHAPED AROUND THE BOTTOM HALF OF THE PIPE WHICH FORMS THE FLOW CHANNEL.
14. PIPES INSTALLED WITHIN THE EXCAVATION MADE FOR THE MANHOLE SHALL BE CRADLED WITH CONCRETE TO THE LIMITS OF THE MANHOLE EXCAVATION. WHEN CLAY PIPE IS USED, THE CRADLE SHALL EXTEND TO THE FIRST JOINT OUTSIDE THE MAHOLE. THE CRADLE SHALL BE TERMINATED AT THE CLAY PIPE JOINT IN A MANNER WHICH WILL MAINTAIN THE FLEXIBILITY OF THE JOINT. COST OF CRADLE WITHIN MANHOLE EXCAVATION OR TO CLAY PIPE JOINTS ADJACENT TO MANHOLE SHALL BE INCLUDED IN THE UNIT PRICE BID FOR THE MANHOLE.
15. MANHOLE COVER CASTINGS AND MANHOLE FRAME CASTINGS SHALL CONFORM TO THE REQUIREMENTS AS INDICATED IN THE STANDARD SPECIFICATIONS AND AS SHOWN IN THE STANDARD DETAIL DRAWING.
16. THE VERTICAL DROP IN INSIDE DROP MANHOLES SHALL NOT EXCEED 2' FOR INFLOWING PIPES SIZED 12" OR SMALLER AND 2' FOR INFLOWING PIPES LARGER THAN 12". THE CROWNS OF INFLOWING PIPES SHALL NEVER BE SET LOWER THAN THE CROWN OF THE OUTFLOWING PIPE.
17. STANDARD MANHOLES AND STANDARD INSIDE DROP MANHOLES SHALL BE BID AS STANDARD MANHOLES FOR THE TYPE AND DIAMETER INDICATED. OUTSIDE DROP MANHOLES SHALL BE BID AS STANDARD OUTSIDE DROP MANHOLES FOR THE TYPE AND DIAMETER INDICATED. ALL MANHOLE DIAMETERS WILL BE 4' UNLESS INDICATED OTHERWISE.
18. A BRICK MASONRY COLLAR SHALL BE INSTALLED BETWEEN THE CAST IRON FRAME AND THE CONCENTRIC CONE. THE COLLAR WILL HAVE 8" WALLS AND A VERTICAL HEIGHT OF 6" MINIMUM AND 18" MAXIMUM. A 1" COAT OF MORTAR WILL BE PLASTERED ON THE OUTSIDE OF THE COLLAR. THE USE OF PRE-CAST CONCRETE SPACERS FOR MANHOLE TOP ADJUSTMENT IS ALSO ALLOWED.
19. CRUSHED ROCK CONFORMING TO ASTM C-33 WITH A GRADATION OF NO. 67 SHALL BE INSTALLED AT THE BASE OF THE MANHOLE TO A DEPTH OF NO LESS THAN 6", AND SHALL EXTEND NO LESS THAN 6" OUTSIDE THE DIAMETER OF THE CONCRETE FLOOR OF THE MANHOLE.
20. WALL THICKNESS SHALL BE 1" GREATER THAN MANHOLE DIAMETER IN FEET.
21. THE FULL DIAMETER OF THE MANHOLE SHALL EXTEND THE ENTIRE DEPTH OF THE MANHOLE TO THE CONE SECTION. NO REDUCTION IN MANHOLE DIAMETER WILL BE ALLOWED.

REV. 1/05/01, MGG

CITY OF WICHITA
PUBLIC WORKS
ENGINEERING

STANDARD TYPE 'P' MANHOLES

CITY ENGINEER
NEIL D. CABLE, P.E.

PROJECT NUMBER	DCA NUMBER	DATE
XXX-XXXXX	XXXXXX	MM/YY

CITY ENGINEER'S OFFICE
CITY HALL - SEVENTH FLOOR
455 NORTH MAIN STREET
WICHITA, KANSAS 67202-1620
(316) 268-4600
(316) 268-4119 FAX

DESIGN	DRAWN
ABC	DEF

SHEET X OF X

Type P Manhole.DWG