SANITARY SEWER EXTENSION
FOR
"RESTHAVEN CEMETERY"
LOCATED NORTH OF THE INTERSECTION OF
119TH ST. W. & KELLOGG,
WICHITA, KANSAS
COW PRIV. PROJ. NO. 1360 PPS(607861)
NEIL D. CABLE P.E., CITY ENGINEER
SEPTEMBER 2003

GENERAL NOTES

1. ALL ELEVATIONS SHOWN ARE BASED ON CITY OF WICHITA DATUM (MEAN SEA LEVEL ELEV.- 1187.4 = CITY DATUM).

2. CONTRACTOR WILL BE REQUIRED TO PROVIDE A MINIMUM ADVANCE NOTICE OF FORTY-EIGHT(48)HOURS TO UTILITY COMPANIES PRIOR TO STARTING ANY EXCAVATION AS FOLLOWS:

KANSAS ONE CALL 687-2470

THE CONTRACTOR MUST NOTIFY THE FOLLOWING IN CASE OF AN EMERGENCY:

COX CABLE	262-4270 OR 263-2061
KANSAS GAS SERVICE	263-7511
WESTAR	264-1141
AQUILA	942-8811
[illegible]	1-371-2611

THE CONTRACTOR SHALL NOTIFY PIPELINE COMPANIES AT LEAST 24 HOURS IN ADVANCE OF ANY WORK BEING PERFORMED ACROSS AND/OR ADJACENT TO PIPELINES.

3. COST OF EXCAVATION, HAULING AND DUMPING OF EXCESS EXCAVATION SHALL BE SUBSIDIARY TO OTHER ITEMS OF WORK.

4. THE CONTRACTOR SHALL NOTIFY THE INSPECTOR FOR THIS PROJECT 48 HOURS PRIOR TO BEGINNING CONSTRUCTION. THE CONTRACTOR SHALL NOT START WORK ON THE PROJECT UNTIL THE PROJECT INSPECTOR ASSIGNED TO THE PROJECT IS PRESENT ON SITE. ANY WORK DONE WITHOUT INSPECTION WILL BE REQUIRED TO BE UNCOVERED FOR INSPECTION.

5. THE CONTRACTOR SHALL GIVE ALL PROPERTY OWNERS AND/OR TENANTS OF DEVELOPED PROPERTY DIRECTLY ABUTTING THE CONSTRUCTION OF THIS PROJECT A MINIMUM OF TEN (10) DAYS ADVANCE NOTICE PRIOR TO START OF CONSTRUCTION.

6. THE CONTRACTOR SHALL BE RESPONSIBLE FOR PRESERVING PROPERTY IRONS. THE CONTRACTOR WILL BE REQUIRED TO REESTABLISH ANY PROPERTY IRONS WHICH ARE DAMAGED OR DESTROYED BY HIS CONSTRUCTION OPERATIONS SUCH IRONS SHALL BE REESTABLISHED BY A LICENSED LAND SURVEYOR IN ACCORDANCE WITH STATE LAWS.

7. THE CONTRACTOR SHALL RESTORE ALL DITCHES, SWALES, ROAD SHOULDERS, ENTRANCES AND BANK LINES TO THEIR ORIGINAL SLOPES AND GRADES EXCEPT AS SHOWN OTHERWISE.

8. INTERURBAN TRAFFIC GENERATED OUTSIDE THE PROJECT AREA SHALL BE CARRIED THROUGH CONSTRUCTION. LOCAL RESIDENTIAL TRAFFIC GENERATED WITHIN THE PROJECT AREA SHALL BE CARRIED THROUGH CONSTRUCTION AS FURTHER PROVIDED BY PROJECT SPECIAL PROVISIONS.

9. UNDERGROUND UTILITY SERVICE LINES AND OVERHEAD UTILITY POLE LINES ARE TO BE ADJUSTED AS NECESSARY BY OTHERS PRIOR TO CONSTRUCTION UNLESS THE PLANS SPECIFICALLY CALL FOR THEIR ADJUSTMENT BY THE CONTRACTOR OR UNLESS THE PLANS SPECIFICALLY IDENTIFY A UTILITY TO BE ADJUSTED BY ITS OWNER DURING CONSTRUCTION. EXISTING UTILITIES AND THEIR LOCATION, AS SHOWN ON THE PLANS, REPRESENT THE BEST INFORMATION OBTAINABLE FOR DESIGN. LOCATION INFORMATION HAS BEEN OBTAINED FROM THE VARIOUS UTILITY COMPANIES AND IS EITHER FROM COMPANY RECORD DRAWINGS OR COMPANY PROVIDED FIELD LOCATIONS. THE CONTRACTOR WILL BE REQUIRED TO WORK AROUND EXISTING UTILITIES WITHIN THE RIGHT-OF-WAY WHICH DO NOT CONFLICT WITH PROPOSED CONSTRUCTION.

10. RUBBLE FROM THE REMOVAL OF MISCELLANEOUS STRUCTURES AND EXCESS EXCAVATION WHICH IS TO BE WASTED SHALL BE DISPOSED OF ON SITES TO BE PROVIDED BY THE CONTRACTOR. THESE SITES SHALL BE APPROVED BY THE ENGINEER AS TO SUITABILITY, APPEARANCE AND SITE LOCATION. LOCATIONS, THAT IN THE OPINION OF THE ENGINEER, WILL LEAVE AN UNSIGHTLY APPEARANCE WILL NOT BE APPROVED. ALL DISPOSAL SITES MUST BE APPROVED BY THE KANSAS DEPARTMENT OF HEALTH AND ENVIRONMENT. MATERIAL EITHER STOCKPILED OR DISPOSED OF IN A FLOODPLAIN WOULD REQUIRE A KANSAS STATE BOARD OF AGRICULTURE PERMIT. ANY MATERIAL DUMPED IN WATERS OF THE UNITED STATES OR WETLANDS IS SUBJECT TO U.S. CORPS OF ENGINEERS PERMITTING REGULATIONS. ANY MATERIAL BURIED OR STOCKPILED BEYOND APPROVED CONSTRUCTION LIMITS WOULD REQUIRE ADDITIONAL ARCHAEOLOGICAL INVESTIGATIONS UNLESS BURIED IN A PREVIOUSLY APPROVED BORROW LOCATION.

11. PROPERTIES WITHIN THE PROJECT LIMITS MAY HAVE UNDERGROUND SPRINKLER SYSTEMS IN THE PUBLIC RIGHT-OF-WAY WHICH CONFLICT WITH NEW CONSTRUCTION. CONTRACTOR WILL BE REQUIRED TO REMOVE SUCH IMPROVEMENTS SHOULD THEY NOT BE REMOVED BY THEIR OWNER AT THE TIME OF CONSTRUCTION OF THE PROJECT. THE CONTRACTOR WILL BE REQUIRED TO SALVAGE ALL SPRINKLER HEADS AND/OR VALVES AND GIVE SUCH MATERIAL TO THEIR OWNER. PORTIONS OF UNDERGROUND SPRINKLER SYSTEMS NOT IN CONFLICT WITH NEW CONSTRUCTION SHALL BE PROTECTED FROM DAMAGE AND SHALL REMAIN IN PLACE. ALL WORK IN CONNECTION WITH UNDERGROUND SPRINKLER SYSTEMS SHALL BE CONSIDERED AS SUBSIDIARY TO THE CONTRACT PAY ITEMS OF WORK.

12. ALL PROPOSED STUBS AND PLUGGED PIPES SHALL BE LOCATED WITH GREEN PLASTIC TAPE.

13. PRIOR TO LAYING THE NEW SEWER LINES THE CONTRACTOR SHALL EXPOSE AND VERIFY THE ELEVATION, GRADE AND ALIGNMENT OF THE EXISTING SANITARY SEWER AND NOTIFY THE ENGINEER OF ANY DISCREPANCIES FROM THE PLAN.

14. THE CONTRACTOR MUST EXAMINE THE CONSTRUCTION SITE PRIOR TO BIDDING AND BE SATISFIED AS TO THE WORK SHOWN FOR COMPLETION. AFTER BIDS HAVE BEEN RECEIVED, THE CONTRACTOR SHALL NOT ASSERT THAT THERE WAS A MISUNDERSTANDING OF THE QUANTITIES OF WORK OR OF THE NATURE FOR THE WORK TO BE COMPLETED.

15. EXISTING UTILITIES AND THEIR LOCATION, AS SHOWN ON THE PLANS, REPRESENT THE BEST INFORMATION AVAILABLE FOR DESIGN. LOCATION INFORMATION HAS BEEN OBTAINED FROM THE VARIOUS UTILITY COMPANIES AND IS EITHER FROM COMPANY RECORD DRAWINGS OR COMPANY PROVIDED FIELD LOCATIONS. THE PLAN LOCATIONS ARE NOT GUARANTEED. ADDITIONAL EXISTING UTILITIES MAY ALSO BE ENCOUNTERED. THE CONTRACTOR WILL BE REQUIRED TO WORK AROUND EXISTING UTILITIES WHICH ARE ENCOUNTERED ON THIS PROJECT. THE CONTRACTOR SHALL EXERCISE EXTREME CAUTION DURING TRENCHING OPERATIONS TO AVOID DAMAGING THESE LINES. ANY LINES DAMAGED SHALL BE REPLACED OR REPAIRED IMMEDIATELY AS DIRECTED BY THE ENGINEER AT THE CONTRACTOR'S EXPENSE.

16. ALL PIPE JOINTS SHALL BE LAID AND PUSHED "FULL HOME", WITH THE BEVELED END OF THE SPIGOT MAKING FULL CONTACT WITH THE CHAMFERED AREA AT THE THROAT OF THE BELL OR SOCKET, WITH NO SEPARATION BETWEEN THEM. IF SEPARATION IS DETERMINED, THE PIPE SHALL BE EXCAVATED AND RE-LAID ACCORDING TO SPECIFICATIONS AT THE CONTRACTOR'S EXPENSE.

17. AT LEAST 24 HOURS BEFORE CONNECTING NEW SEWER PIPE TO THE EXISTING SEWAGE SYSTEM, THE CONTRACTOR SHALL CONTACT THE CITY OF WICHITA SEWER DEPARTMENT (268-4024). THE CONTRACTOR SHALL KEEP ANY CONSTRUCTION DEBRIS FROM ENTERING THE EXISTING SANITARY SEWER DURING CONSTRUCTION. TO PREVENT WATER OR DEBRIS FROM ENTERING THE EXISTING SEWER, A MECHANICAL PLUG SHALL BE INSTALLED AND MAINTAINED TO ISOLATE THE EXISTING SEWER FROM THE NEW CONSTRUCTION UNTIL THE NEW CONSTRUCTION IS CLEANED, TELEMISED AND HAS BEEN ACCEPTED. THE WATER USED FOR CLEANING SHALL NOT BE ADDED TO THE FLOW OF THE EXISTING SEWER. THE CLEANING OR OTHERWISE ACCUMULATED WATER SHALL BE PUMPED OR OTHERWISE REMOVED PRIOR TO TELEVISING.

18. THE CONTRACTOR SHALL CONTAIN HIS OPERATIONS TO PERMIT TRAFFIC THROUGH AND ACROSS CONSTRUCTION AT EXISTING ROADWAYS AT ALL TIMES. THE CONTRACTOR SHALL ERECT WARNING SIGNS, FLASHING LIGHTS, AND BARRICADES IN COMPLIANCE WITH THE MANUAL ON UNIFORM TRAFFIC CONTROL DEVICES TO ENSURE SAFETY AS DIRECTED IN THE GENERAL CONDITIONS. THE CONTRACTOR SHALL LIMIT THE EXTENT OF TRENCH TO REMAIN OPEN OVERNIGHT AND WEEKENDS TO LESS THAN 50 FEET.

19. SEEDING AND FERTILIZING OF ALL AREAS DISTURBED BY THE CONSTRUCTION OF THE SANITARY SEWER AS SHOWN ON THE PLANS SHALL BE PAID FOR AS A LUMP SUM FOR "SEEDING AND FERTILIZING.

20. THE CONTRACTOR SHALL PROVIDE POSITIVE DRAINAGE AWAY FROM ALL MANHOLE COVERS.

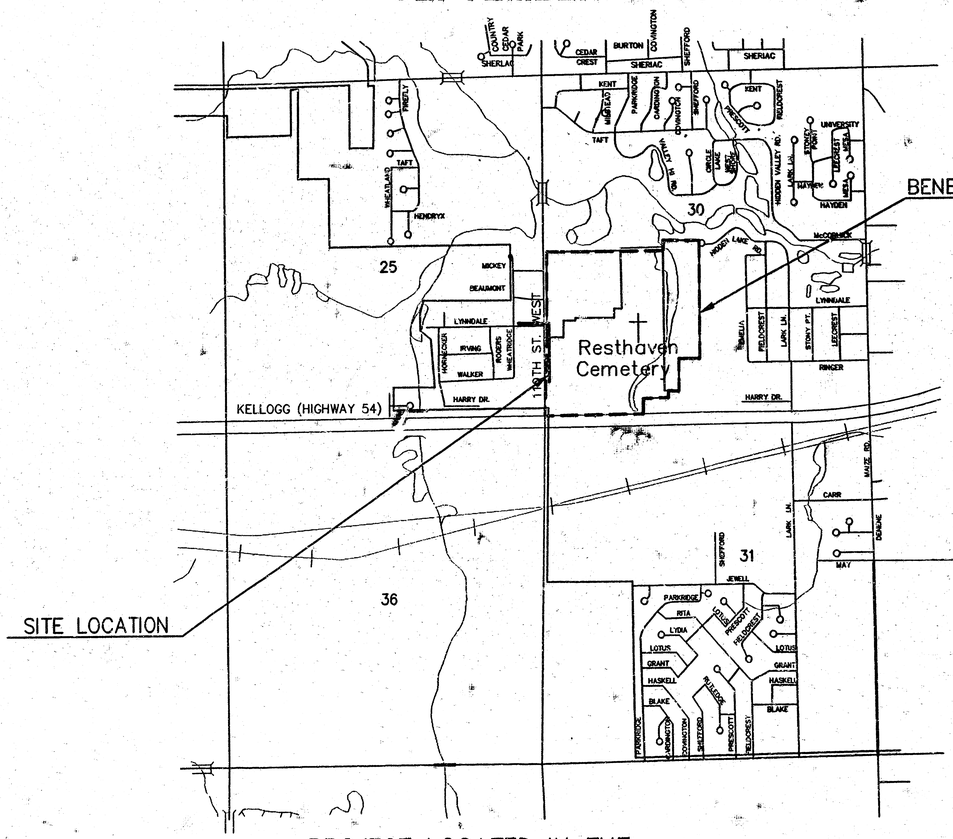

PROJECT LOCATED IN THE
S.E.1/4, SEC. 25, T.27S., R.2W. &
S.W.1/4, SEC. 30, T.27S., R.1W.
WICHITA, SEDGWICK COUNTY, KANSAS

INDEX OF SHEETS

1. Title Sheet
2. Site Plan
3 & 5. SS Plan & Profile
6. Std. Type 'P' MH Details
7. Back Fill Detail

APPROVED AS NOTED
By CITY ENGINEER OF WICHITA

Sanitary Sewers URH 9/19/03
Storm Sewers _____
Driveway Approaches _____
Water Mains _____
Paving _____

NOTE TO CONTRACTOR

INSPECTION AND TESTING FOR THIS PROJECT IS TO BE PROVIDED BY A LICENSED CONSULTING ENGINEERING FIRM UNDER CONTRACT WITH THE OWNER/DEVELOPER. SAID INSPECTION TO BE IN ACCORDANCE WITH THE CITY OF WICHITA STANDARD CONSTRUCTION ENGINEERING PRACTICES AND CERTIFIED BY A LICENSED PROFESSIONAL ENGINEER. NO WORK SHALL BE PERFORMED IN DEDICATED EASEMENTS OR THE PUBLIC RIGHT-OF-WAY BY THE CONTRACTOR WITHOUT SUCH INSPECTION NOR SHALL ANY WORK BE COMMENCED IN DEDICATED EASEMENTS OR PUBLIC RIGHT-OF-WAY WITHOUT WRITTEN AUTHORIZATION BY THE CITY ENGINEER.

1/06/04
RDL
.PDF

HARLAN DALE FORMELLA
LICENSED
10891
KANSAS
PROFESSIONAL ENGINEER
9.19.03

CED PRCJ. NO.: 20020842

CERTIFIED ENGINEERING DESIGN, P.A.
CED
810 WEST DOUGLAS, SUITE C
WICHITA, KANSAS 67203
PH: (316) 262-8808
FAX: (316) 262-1669

SHEET 1
TOTAL 7

12-29-03 AS-BUILT HDF/CED

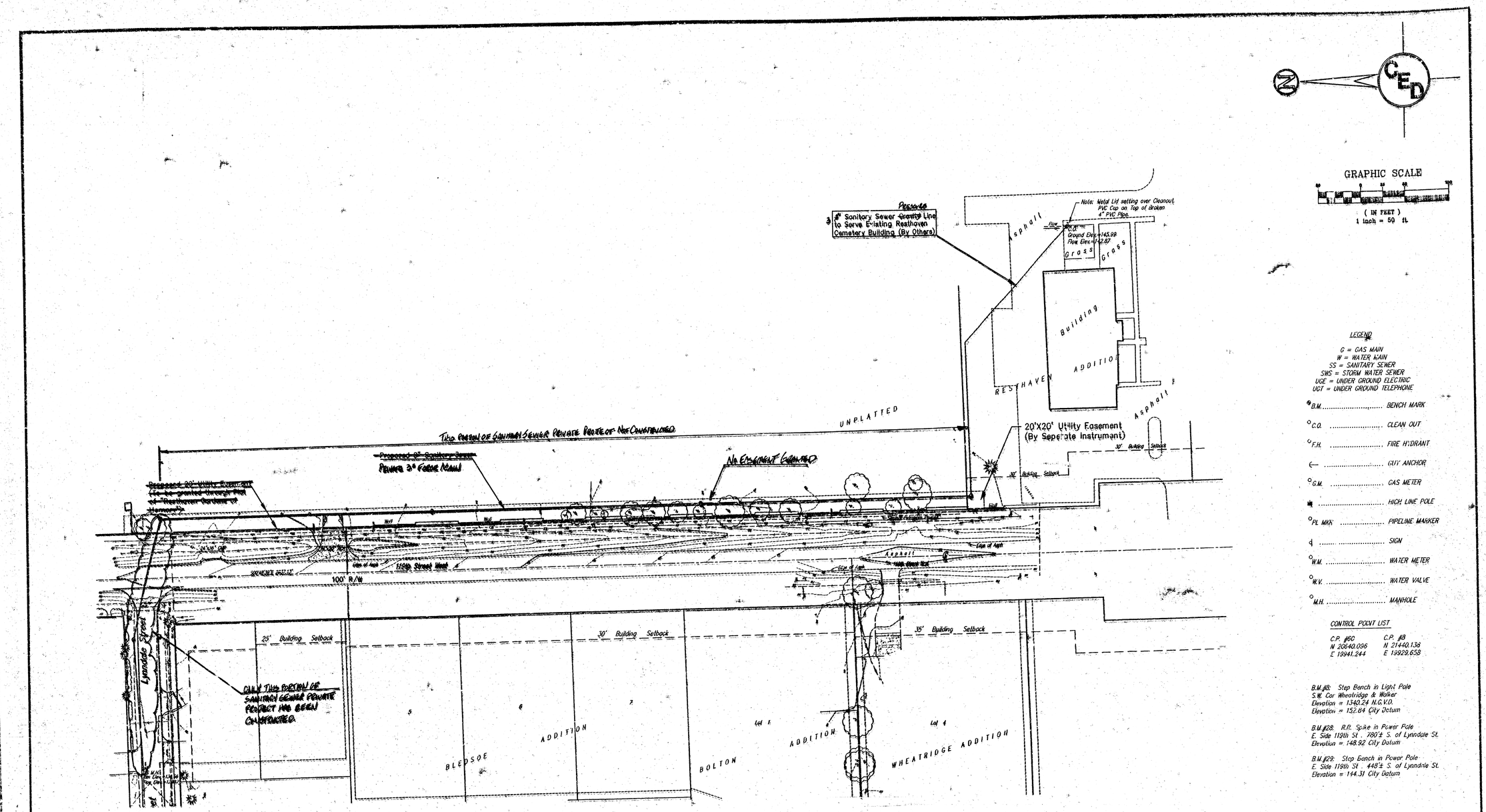

GRAPHIC SCALE

(IN FEET)
1 inch = 50 ft.

LEGEND

G = GAS MAIN
W = WATER MAIN
SS = SANITARY SEWER
SWS = STORM WATER SEWER
UGE = UNDER GROUND ELECTRIC
UGT = UNDER GROUND TELEPHONE

B.M. ..... BENCH MARK
C.O. ..... CLEAN OUT
F.H. ..... FIRE HYDRANT
← ..... GUY ANCHOR
G.M. ..... GAS METER
..... HIGH LINE POLE
PL MKR ..... PIPELINE MARKER
..... SIGN
W.M. ..... WATER METER
W.V. ..... WATER VALVE
M.H. ..... MANHOLE

CONTROL POINT LIST

C.P. #60	C.P. #8
N 20640.096	N 21440.138
E 19941.244	E 19929.658

B.M.#8: Step Bench in Light Pole
S.W. Cor Wheatridge & Walker
Elevation = 1340.24 N.G.V.D.
Elevation = 152.64 City Datum

B.M.#28: R.R. Spike in Power Pole
E. Side 119th St., 780'± S. of Lyndale St.
Elevation = 148.92 City Datum

B.M.#29: Step Bench in Power Pole
E. Side 119th St., 448'± S. of Lyndale St.
Elevation = 144.31 City Datum

SANITARY SEWER EXTENSION TO SERVE
RESTHAVEN CEMETERY
WICHITA, SEDGWICK COUNTY, KANSAS
CED PROJ. NO.: 20020842

CERTIFIED ENGINEERING DESIGN, P.A.
810 WEST DOUGLAS, SUITE C
WICHITA, KANSAS 67203
PH.(316)262-8808 FAX.(316)262-1669

DESIGNED: HDF	SCALE: 1"=50'	SHEET 2
DRAWN: CKW	DATE: 9/03	
CHECKED: HDF	CED FILE: Base	TOTAL 7

12-29-03 As-Built HDF w/CED

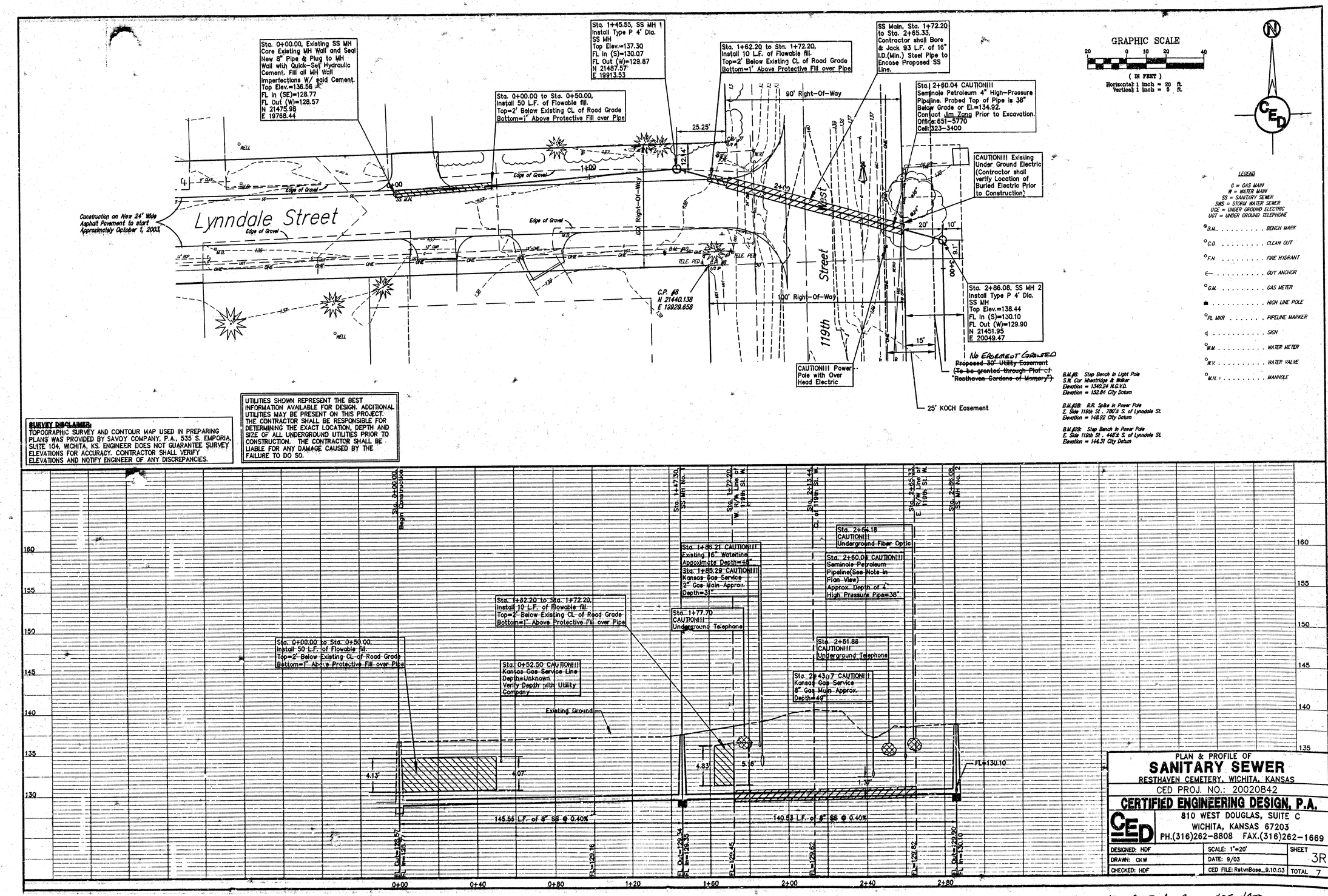

PLAN & PROFILE OF
SANITARY SEWER
RESTHAVEN CEMETERY, WICHITA, KANSAS
CED PROJ. NO.: 20020842

CERTIFIED ENGINEERING DESIGN, P.A.
810 WEST DOUGLAS, SUITE C
WICHITA, KANSAS 67203
PH.(316)262-8808 FAX.(316)262-1669

DESIGNED: HDF	SCALE: 1"=20'	SHEET 3R
DRAWN: CKW	DATE: 9/03	
CHECKED: HDF	CED FILE: RstvnBase_9.10.03	TOTAL 7

12-29-03 As-Built HDF w/CED

END PROJECT

Sta. 2+88.08, SS MH 2
Install Type P 4' Dia.
SS MH
Top Elev.=138.44
FL In (S)=130.10
FL Out (W)=129.90
N 21451.95
E 20049.47

~~Proposed 30' Utility Easement (To be granted through Plat of "Resthaven Gardens of Memory")~~

STA. 2+86.08 TO STA. 12+37.96 NOT CONSTRUCTED AS A 8" PUBLIC SANITARY SEWER. A PRIVATE FORCE MAIN HAD BEEN CONSTRUCTED IN PLACE OF 8" GRAVITY MAIN.

Existing 25' Koch Easement

Sta. 6+03.38, SS MH 3
Install Type P 4' Dia.
SS MH
Top Elev.=141.38
FL In (S)=132.67
FL Out (W)=132.64
N 21134.68
E 20053.96

Proposed 30' Utility Easement (To be granted through Plat of "Resthaven Gardens of Memory")

Sta. 7+75.00, Match Line
FL=133.35
N 20963.08
E 20056.39

24"x36" CMP

14"x20" RCP

Edge of Asph.

119th Street West

GRAPHIC SCALE

20 0 10 20 40

(IN FEET)
Horizontal: 1 inch = 20 ft
Vertical: 1 inch = 5 ft

LEGEND

G = GAS MAIN
W = WATER MAIN
SS = SANITARY SEWER
SWS = STORM WATER SEWER
UGE = UNDER GROUND ELECTRIC
UGT = UNDER GROUND TELEPHONE

- B.M. . . . . BENCH MARK
- C.O. . . . . CLEAN OUT
- F.H. . . . . FIRE HYDRANT
- ← . . . . . GUY ANCHOR
- G.M. . . . . GAS METER
- ■ . . . . . HIGH LINE POLE
- PL MKR . . . . . PIPELINE MARKER
- ◁ . . . . . SIGN
- W.M. . . . . WATER METER
- W.V. . . . . WATER VALVE
- M.H. . . . . MANHOLE

B.M.#A: Step Bench in Light Pole
S.W. Cor Woodridge & Walker
Elevation = 1340.24 N.G.V.D.
Elevation = 152.84 City Datum

B.M.#B: R.R. Spike in Power Pole
E. Side 119th St., 780'± S. of Lyendale St.
Elevation = 148.92 City Datum

B.M.#C: Step Bench in Power Pole
E. Side 119th St., 448'± S. of Lyendale St.
Elevation = 144.31 City Datum

SURVEY DISCLAIMER:
TOPOGRAPHIC SURVEY AND CONTOUR MAP USED IN PREPARING PLANS WAS PROVIDED BY SAVOY COMPANY, P.A., 535 S. EMPORIA, SUITE 104, WICHITA, KS. ENGINEER DOES NOT GUARANTEE THEY ELEVATIONS FOR ACCURACY. CONTRACTOR SHALL VERIFY ELEVATIONS AND NOTIFY ENGINEER OF ANY DISCREPANCIES.

UTILITIES SHOWN REPRESENT THE BEST INFORMATION AVAILABLE FOR DESIGN. ADDITIONAL UTILITIES MAY BE PRESENT ON THIS PROJECT. THE CONTRACTOR SHALL BE RESPONSIBLE FOR DETERMINING THE EXACT LOCATION, DEPTH AND SIZE OF ALL UNDERGROUND UTILITIES PRIOR TO CONSTRUCTION. THE CONTRACTOR SHALL BE LIABLE FOR ANY DAMAGE CAUSED BY THE FAILURE TO DO SO.

Sta. 2+86.08 SS MH No. 2

Sta. 6+03.38 SS MH No. 3

Sta. 7+75.00 Match Line

8" PUBLIC SANITARY SEWER NOT CONSTRUCTED (SEE NOTE ABOVE)

Existing Ground

FL=130.10

317.30 L.F. of 8" SS @ 0.81%

171.62 L.F. of 8" SS @ 0.40%

FL Out=129.90
FL In=130.10
FL=130.20
FL=131.01
FL=131.32
FL Out=132.64
FL In=132.67
FL=133.05
FL=133.35

160 155 150 145 140 135 130

2+80 3+20 3+60 4+00 4+40 4+80 5+20 5+60 6+00 6+40 6+80 7+20 7+80

PLAN & PROFILE OF
SANITARY SEWER
RESTHAVEN CEMETERY, WICHITA, KANSAS
CED PROJ. NO.: 20020842

CERTIFIED ENGINEERING DESIGN, P.A.
810 WEST DOUGLAS, SUITE C
WICHITA, KANSAS 67203
PH.(316)262-8808 FAX.(316)262-1669

DESIGNED: HDF	SCALE: 1"=20'	SHEET 4R
DRAWN: CKW	DATE: 9/03	
CHECKED: HDF	CED FILE: RstvnBase_0.10.03	TOTAL 7

12-29-03 As-Built HDF w/CED

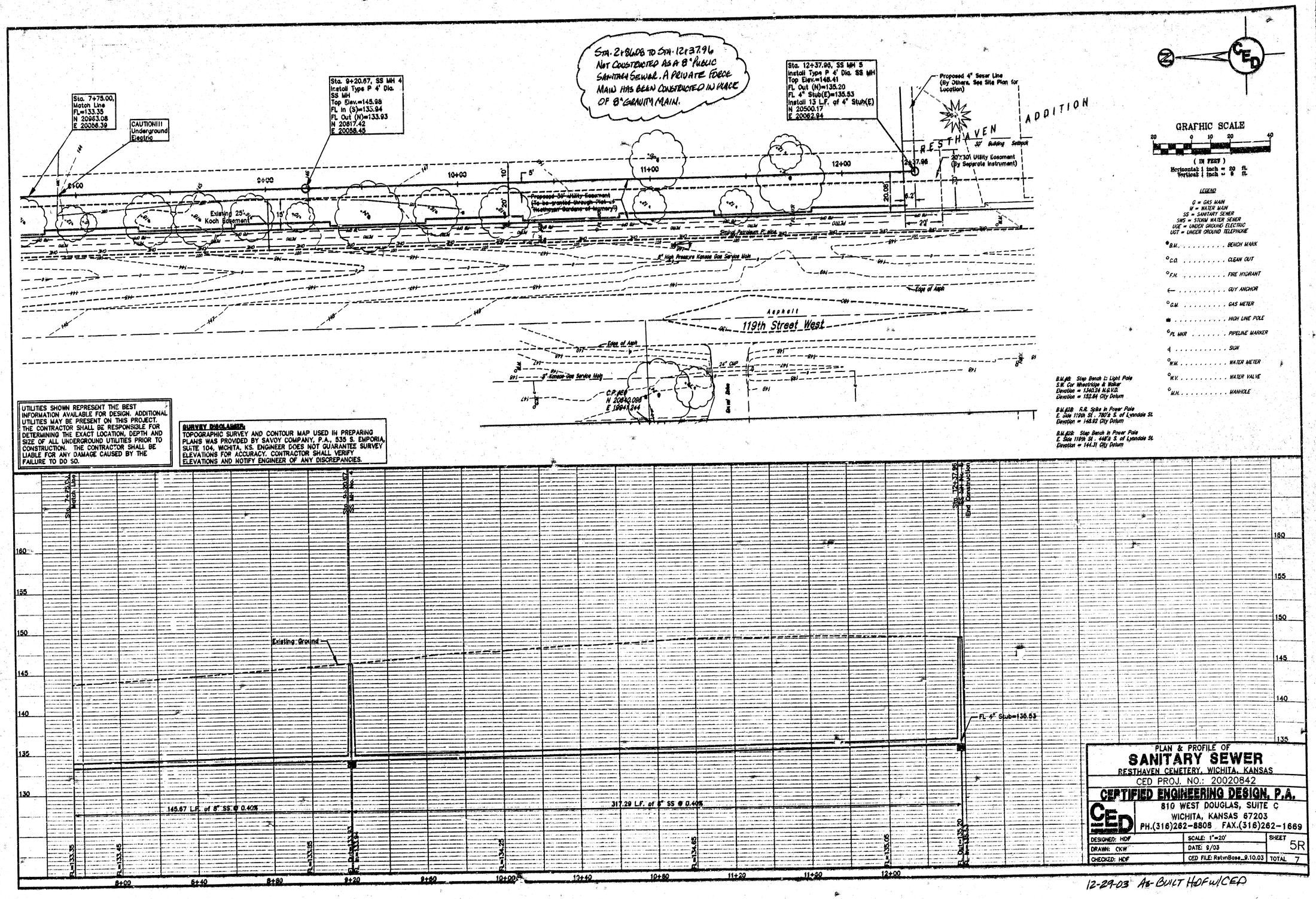

PLAN & PROFILE OF
SANITARY SEWER
RESTHAVEN CEMETERY, WICHITA, KANSAS
CED PROJ. NO.: 20020842

CERTIFIED ENGINEERING DESIGN, P.A.
810 WEST DOUGLAS, SUITE C
WICHITA, KANSAS 67203
PH.(316)262-8808 FAX.(316)262-1669

DESIGNED: HDF	SCALE: 1"=20'	SHEET 5R
DRAWN: CKW	DATE: 9/03	
CHECKED: HDF	CED FILE: RstvnBase_9.10.03	TOTAL 7

12-29-03 As-BUILT HDF w/CED

SEWER APPURTENANCES DETAILS

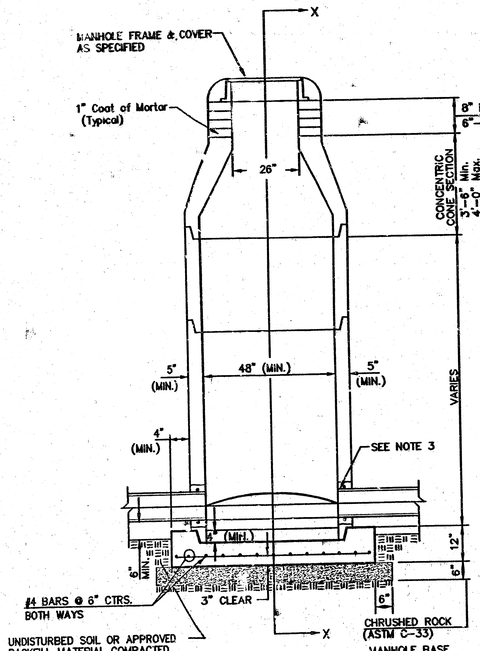

TYPE P
STANDARD MANHOLE

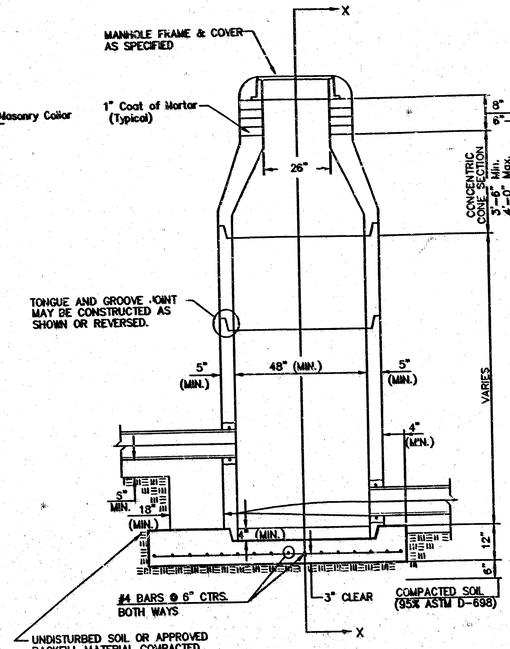

TYPE P
INSIDE DROP MANHOLE

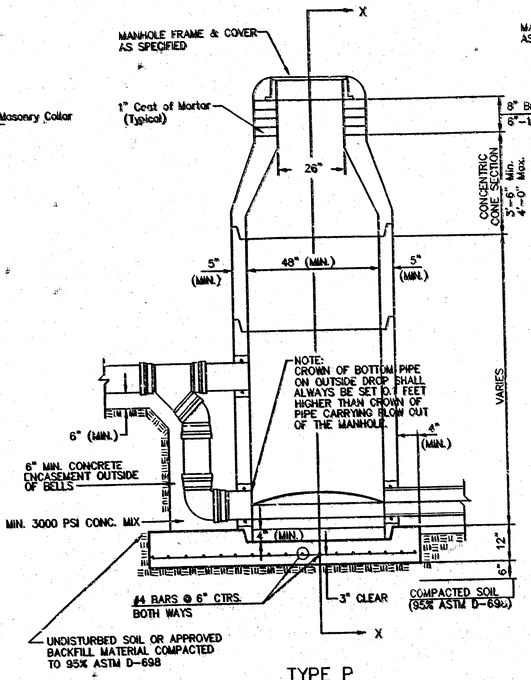

TYPE P
OUTSIDE DROP MANHOLE

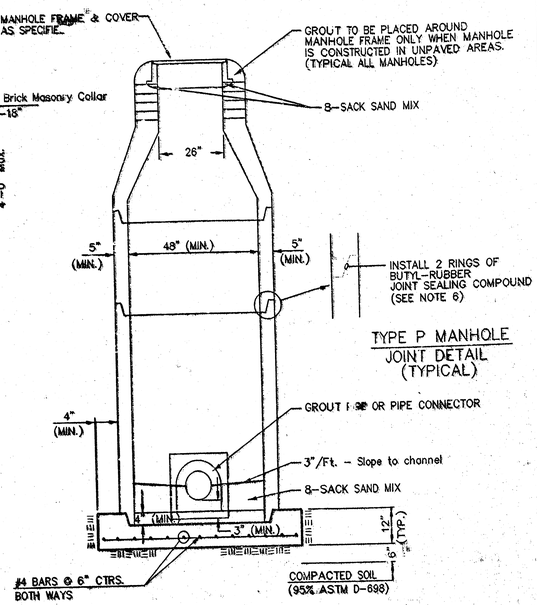

TYPE P MANHOLE
JOINT DETAIL
(TYPICAL)

SECTION X
(TYPICAL)

GENERAL NOTES

PRECAST MANHOLE NOTES

1. ALL PRECAST CONCRETE MANHOLE SECTIONS SHALL CONFORM TO THE LATEST REVISIONS OF A.S.T.M. C478 AS MODIFIED BY THE SPECIFICATIONS.
2. NON-SHRINK GROUT SHALL BE NON-METALLIC TYPE.
3. APPROVED FLEXIBLE WATERSTOP GASKETS SHALL BE INSTALLED TO JOIN THE SEWER TO THE MANHOLE WALL WHEN A.B.S. COMPOSITE PIPE OR P.V.C. PIPE IS USED. FOR OTHER TYPES OF PIPE THE SEWER SHALL BE GROUTED IN PLACE WITH NON-SHRINK GROUT. THE SEWER PIPE SHALL BE SUPPORTED WITH CONCRETE ENCASEMENT A MINIMUM OF 3 FEET FROM THE MANHOLE WALL AND TO THE FIRST JOINT FOR V.C.P. SUCH THAT THE JOINT REMAINS FLEXIBLE.
4. ALL INSIDE SURFACES OF THE CONCRETE MANHOLE WHICH WOULD BE EXPOSED TO SEWER GAS SHALL BE COATED WITH 2 COATS THEMEC SERIES 68 HI-BUILD EPOXOLINE, DRY THICKNESS OF 8 MILS (MIN.)
5. EXTERIOR MANHOLE WALLS SHALL BE COATED WITH 1 COAT MOBILARMA 633 BITUMINOUS COATING.
6. JOINT SEALING COMPOUND SHALL BE KENT SEAL NO. 2 OR APPROVED EQUAL.
7. PRECAST MANHOLES SHALL BE SET AT LEAST 4 INCHES INTO THE MANHOLE BASE.
8. TOP OF MANHOLE FLOOR SLAB SHALL BE AT LEAST 3 INCHES BELOW THE FLOW LINE OF THE OUTLET PIPE TO INSURE SUFFICIENT MINIMUM THICKNESS OF SHAPED INVERT.
9. LIFTING HOLES SHALL BE FILLED WITH NON-SHRINK GROUT AND THE INTERIOR SURFACE COATED AS SPECIFIED.
10. MORTAR USED IN MASONRY CONSTRUCTION SHALL CONTAIN 8 SACKS OF CEMENT PER CUBIC YARD. CONCRETE USED IN MANHOLE BASES SHALL CONFORM TO THE REQUIREMENTS OF CONCRETE FOR CONCRETE PAVEMENT CONSTRUCTION AS SPECIFIED IN THE CITY STANDARD PAVING SPECIFICATIONS USING CITY CONCRETE PAVEMENT MIX WITHOUT AIR ENTRAINING ADMIXTURE. MORTAR SHALL BE PLACED AROUND THE MANHOLE RING AS SHOWN ON THE DRAWINGS WHEN MANHOLES ARE CONSTRUCTED IN UNPAVED AREAS. MANHOLES CONSTRUCTED WHERE PIPE SIZES ARE SMALLER THAN 24" SHALL HAVE AN INSIDE DIAMETER OF 4'. MANHOLES CONSTRUCTED WHERE PIPE SIZES ARE 24" OR LARGER SHALL HAVE AN INSIDE DIAMETER OF 5'. COMPLETED MANHOLE SHALL BE WITHOUT LEAKS AND WATER TIGHT.
11. REINFORCING STEEL SHALL BE INSTALLED IN THE MANHOLE BASES AND SHALL CONSIST OF NO. 4 BARS PLACED ON 6" CENTERS IN BOTH DIRECTIONS. THE MANHOLE BASE REINFORCEMENT SHALL BE PLACED AT LEAST 3" ABOVE THE BOTTOM OF THE MANHOLE BASE. ALL COSTS FOR FURNISHING AND INSTALLING REINFORCING STEEL SHALL BE INCLUDED IN THE UNIT PRICE BID FOR THE MANHOLE.
12. OPENINGS SHALL BE CUT INTO THE MANHOLE WALL WHEN OUTSIDE DROPS ARE CONSTRUCTED ON EXISTING MANHOLES. SUCH OPENINGS CUT INTO EXISTING MANHOLES SHALL BE AS SMALL AS PRACTICAL TO FACILITATE INSTALLING AND GROUTING THE NEW PIPE IN PLACE. WATERSTOP GASKETS SHALL BE USED WITH P.V.C. AND A.B.S. COMPOSITE PIPE. THE NEW PIPE SHALL BE GROUTED INTO THE OPENING USING AN APPROVED NONSHRINK GROUT FOR THE FULL MANHOLE WALL THICKNESS. THE EXTERIOR OF THE COMPLETED CONNECTION SHALL BE SEALED WITH AN APPROVED BITUMINOUS COATING SUCH THAT THE CONNECTION WILL BE WATER TIGHT. FLOOR OF MANHOLE SHALL BE MODIFIED TO FORM NEW FLOW CHANNEL FOR THE NEW CONNECTION AS INDICATED BY THE DRAWING. THIS WORK, INCLUDING MODIFICATION OF MANHOLE FLOOR, SHALL BE PAID FOR AT THE UNIT PRICE BID FOR OUTSIDE DROP STACK CONSTRUCTED ON EXISTING MANHOLE.
13. THE FLOORS OF ALL MANHOLES SHALL BE SHAPED WITH FLOW CHANNELS SUCH THAT THE MANHOLES WILL BE SELF CLEANING AND FREE OF AREAS WHERE SOLIDS COULD BE DEPOSITED AS SEWAGE FLOWS THROUGH THE MANHOLE FROM ALL INLET PIPES TO THE OUTLET PIPE. FLOW CHANNELS SHALL BE FORMED TO MATCH THE BOTTOM HALVES OF THE INFLOWING PIPES AND THE OUTFLOWING PIPE AS SHOWN BY THE DRAWINGS EXCEPT FOR INSIDE DROP MANHOLES. FLOW CHANNELS FOR INSIDE DROP MANHOLES SHALL BE CONSTRUCTED AS INDICATED BY THE DRAWING. MANHOLE FLOORS SHALL HAVE SLOPES OF 3 INCHES PER FOOT IN THE AREAS OUTSIDE OF THE FLOW CHANNELS SLOPED TOWARD THE FLOW CHANNELS. PIPES LAID THROUGH MANHOLES SHALL HAVE THE TOP HALF REMOVED TO NEAT LINES FOR THE FULL INSIDE DIAMETER OF THE MANHOLE. MANHOLE FLOORS SHALL THEN BE SHAPED AROUND THE BOTTOM HALF OF THE PIPE WHICH FORMS THE FLOW CHANNEL.
14. PIPES INSTALLED WITHIN THE EXCAVATION MADE FOR THE MANHOLE SHALL BE CRADLED WITH CONCRETE TO THE LIMITS OF THE MANHOLE EXCAVATION. WHEN CLAY PIPE IS USED, THE CRADLE SHALL EXTEND TO THE FIRST JOINT OUTSIDE THE MAHOLE. THE CRADLE SHALL BE TERMINATED AT THE CLAY PIPE JOINT IN A MANNER WHICH WILL MAINTAIN THE FLEXIBILITY OF THE JOINT. COST OF CRADLE WITHIN MANHOLE EXCAVATION OR TO CLAY PIPE JOINTS ADJACENT TO MANHOLE SHALL BE INCLUDED IN THE UNIT PRICE BID FOR THE MANHOLE.
15. MANHOLE COVER CASTINGS AND MANHOLE FRAME CASTINGS SHALL CONFORM TO THE REQUIREMENTS AS INDICATED IN THE STANDARD SPECIFICATIONS AND AS SHOWN IN THE STANDARD DETAIL DRAWING.
16. THE VERTICAL DROP IN INSIDE DROP MANHOLES SHALL NOT EXCEED 2' FOR INFLOWING PIPES SIZED 12" OR SMALLER AND 2' FOR INFLOWING PIPES LARGER THAN 12". THE CROWNS OF INFLOWING PIPES SHALL NEVER BE SET LOWER THAN THE CROWN OF THE OUTFLOWING PIPE.
17. STANDARD MANHOLES AND STANDARD INSIDE DROP MANHOLES SHALL BE BID AS STANDARD MANHOLES FOR THE TYPE AND DIAMETER INDICATED. OUTSIDE DROP MANHOLES SHALL BE BID AS STANDARD OUTSIDE DROP MANHOLES FOR THE TYPE AND DIAMETER INDICATED. ALL MANHOLE DIAMETERS WILL BE 4' UNLESS INDICATED OTHERWISE.
18. A BRICK MASONRY COLLAR SHALL BE INSTALLED BETWEEN THE CAST IRON FRAME AND THE CONCENTRIC CONE. THE COLLAR WILL HAVE 8" WALLS AND A VERTICAL HEIGHT OF 6" MINIMUM AND 18" MAXIMUM. A 1" COAT OF MORTAR WILL BE PLASTERED ON THE OUTSIDE OF THE COLLAR. THE USE OF PRE-CAST CONCRETE SPACERS FOR MANHOLE TOP ADJUSTMENT IS ALSO ALLOWED.
19. CHRUSHED ROCK CONFORMING TO ASTM C-33 WITH A GRADATION OF NO. 67 SHALL BE INSTALLED AT THE BASE OF THE MANHOLE TO A DEPTH OF NO LESS THAN 6", AND SHALL EXTEND NO LESS THAN 6" OUTSIDE THE DIAMETER OF THE CONCRETE FLOOR OF THE MANHOLE.

THE CITY OF WICHITA

CITY ENGINEER'S OFFICE
CITY HALL - SEVENTH FLOOR
455 NORTH MAIN STREET
WICHITA, KANSAS 67202
(316) 268-4422
(316) 268-4174

STANDARD
TYPE 'P'
MANHOLES

NEIL D. CABLE P.E. - CITY ENGINEER

PROJECT NUMBER	INDEX CODE
1360 PPS	607861
DATE	SHEET 6 OF 7
SEPT 03	

12-29-03 AS-BUILT ADDED

Sheet No.	Total Sheets
7	7

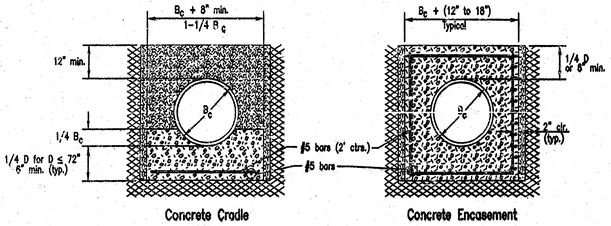

Concrete Cradle — Concrete Encasement

CLASS A

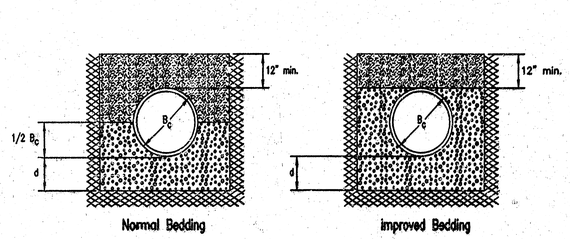

Normal Bedding — Improved Bedding

CLASS B

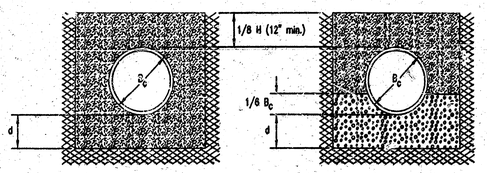

Ordinary Bedding — Improved Bedding

CLASS C

PIPE ZONE BACKFILLING

B_c = Outside Pipe Diameter

H = Backfill from Top of Pipe to Existing Ground

D = Inside Pipe Diameter

d = Depth of Bedding Material Below Pipe

= Granular Bedding Material or Sand-Gravel Bedding

= Compacted Embedment

= Concrete

Depth of Bedding Material Below Pipe		
D	d(min) Soil	d(min) Rock
27" & smaller	4"	6"
30" to 60"	5"	9"
66" & larger	6"	12"

Granular Bedding Material shall be an approved material consisting of durable crushed rock conforming with the requirements of the latest revision of ASTM C-33 Size No. 67 (3/4" to No. 4); to be placed in not more than 6" layers and compacted by slicing with a shovel or vibrating. Soundness, abrasion, and absorption limits shall be as required for coarse aggregates in Section 03010-Concrete Work in the specifications.

Sand-Gravel Bedding Material - sand-gravel mix meeting Type UD-1 of the 1990 Kansas Standard Specifications for State Road and Bridge Construction.

Compacted Embedment shall be an approved sand material free from debris, organic material, and stones with 100% passing the 3/4" sieve to be placed in uniform layers not more than 6" thick and compacted to 95 percent maximum density as determined by ASTM D698. Granular Bedding Material may be substituted for all or part of Compacted Embedment Materials.

Class A "Concrete Cradle" and/or Class A "Concrete Encasement" is not required unless specified on the plans. However, where unexpected trench conditions exist or improper trenching is performed Class A Bedding may be required as determined by the Engineer.

Class B Bedding shall be used for all flexible pipe.

a. Class B Normal Bedding shall be used for PVC Pipe unless wet conditions are encountered.

b. Class B Improved Bedding shall be used for other flexible pipe, and for PVC pipe in wet conditions.

Class C Bedding shall be used for all rigid pipe.

a. Class C Ordinary Bedding shall be used for all rigid pipe unless wet conditions are encountered.

b. Class C Improved Bedding shall be used for wet conditions existing in the trench, as directed by the Engineer, at no additional cost to the Owner. The dimensions shall be equal to that required for "rock" excavation (see specifications).

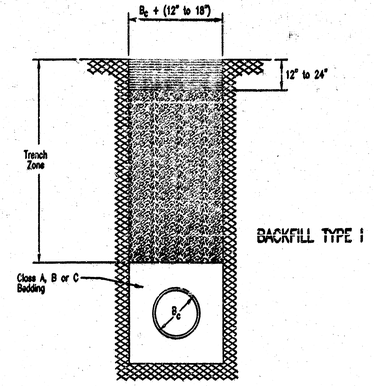

BACKFILL TYPE I

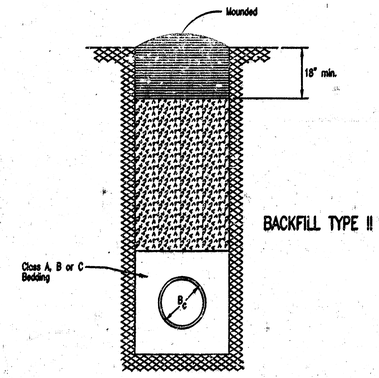

BACKFILL TYPE II

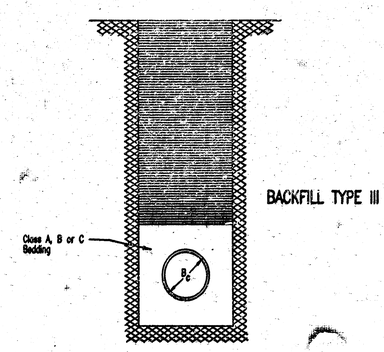

BACKFILL TYPE III

TRENCH ZONE BACKFILLING

B_c = Outside Pipe Diameter

= Compacted Granular Backfill

= Uncompacted Earth Backfill

= Compacted Earth Backfill

Compacted Granular Backfill material shall be an approved sand material free from debris, organic material and stones with 100% passing the 3/4" sieve and not more than 15% passing a No. 200 sieve; to be jetted and mechanically vibrated into place and compacted to 95% density as determined by ASTM D698.

Uncompacted Earth Backfill material may be natural soil free from large clods or stones, brush, roots more than 2 inches in diameter, debris, and junk. Flooding with water shall be provided as directed by the Engineer.

Compacted Earth Backfill shall consist of material existing prior to trenching or selected material as directed by the Engineer, and shall be compacted to 90% density as determined by ASTM D698.

Backfill: Backfill material and compaction requirements shall conform to either Type I, Type II or Type III as specified in the plans. One years maintenance will be required on all backfill.

Backfilling Through Rock: Backfilling through rock shall be performed as specified in the paragraph Backfill above, except that the Pipe Zone is increased to provide eighteen (18) inches of cover over the pipe. When approved by the Engineer the remainder of the backfill may be excavated rock provided the excavated rock has been broken up so that earth and rock will thoroughly mix and not result in voids around the larger pieces of rock. Any excess rock remaining after the trench has been backfilled shall be removed or wasted as directed by the Engineer.

Backfilling Under Pavement: Backfilling under existing or proposed pavement shall be performed as Backfill Type I to a level of two (2) feet from the bottom of the pavement. The remainder of the trench shall be backfilled with selected material, sufficiently damp to be properly compacted in layers not exceeding six (6) inches in depth, compaction shall be performed with mechanical tampers and continued until a relative density of 100 percent of standard density, in conformance with ASTM D698 is attained.

Backfilling Under Gravel Streets: Where the trench crosses or is in existing gravel surfaced streets, the backfill shall be compacted as provided in the paragraph "Backfilling Under Pavement".

BACKFILL DETAILS

12-29-03 As-Built HDF w/CED