SCALE 1"=30'

SCREEN WALL

0.34%

122.0

SAFEWAY STORE
F.F. 122.75

FUTURE BUILDING
F.F. 122.75

Sta 0+70.0 Line 2
Const. STD. Drop Inlet 2'4'
Grate Elev. =120.44
FL. Out = 117.56

Sta 0+00.0
Tie To: Exist. MH.
FL. in (S) = 115.41
FL. Exist. = 109.91

60 LF 21" RCP .5%

70 LF 15" RCP .5%

Remove & Replace
20 S.Y. Bit. Pav. &
10' Curb & Gutter

572 LF 18" RCP 0.5%

Sta - 0+60.0 Line 1
Const. STD. Conc. M.H. SHT 3
Top Elev. = 121.30
FL in (S) = 115.96
FL in (E) = 117.21
FL Out (N) = 115.71

Const. STD. Drop Inlet 2'4'
Grate Elev. = 120.60
FL. Out = 117.30
Sta 3+32.0 Line 1

140 LF 15" RCP 0.5%

Sta 4+75.00 Line 1
Const. STD. Drop Inlet 2'x4'
Grate Elev. 120.80
FL. Out = 119.00

87.0'

0.35%

Note: Build Storm Sewer To City Specifications

Exist Bldg to be Remod

Ex Bldg

Ex Conc

Ex Asphalt

Ex Walk

Walk

Close Cnt

Ex Bldg

AVENUE

CENTRAL

STORM SEWER

(EXIST.) 36" RCP

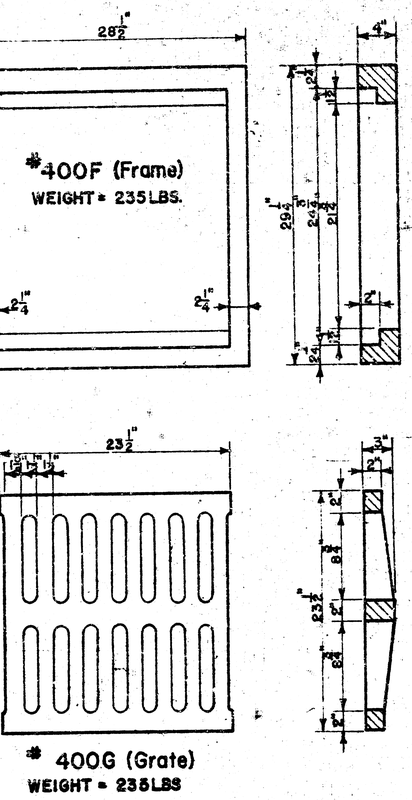
WEST

(EXIST.) STORM SEWER 24" RCP

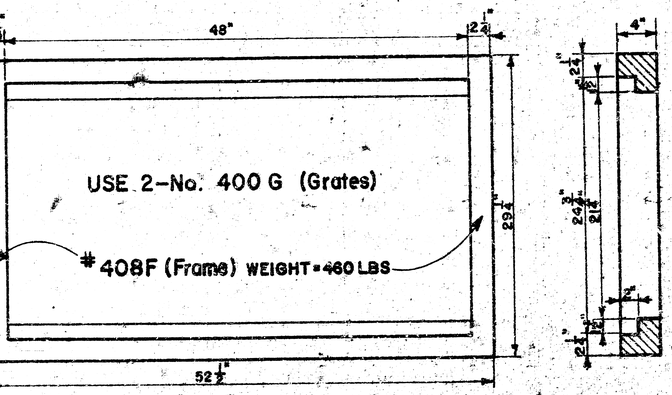
STREET

SITE GRADING & DRAINAGE PLAN

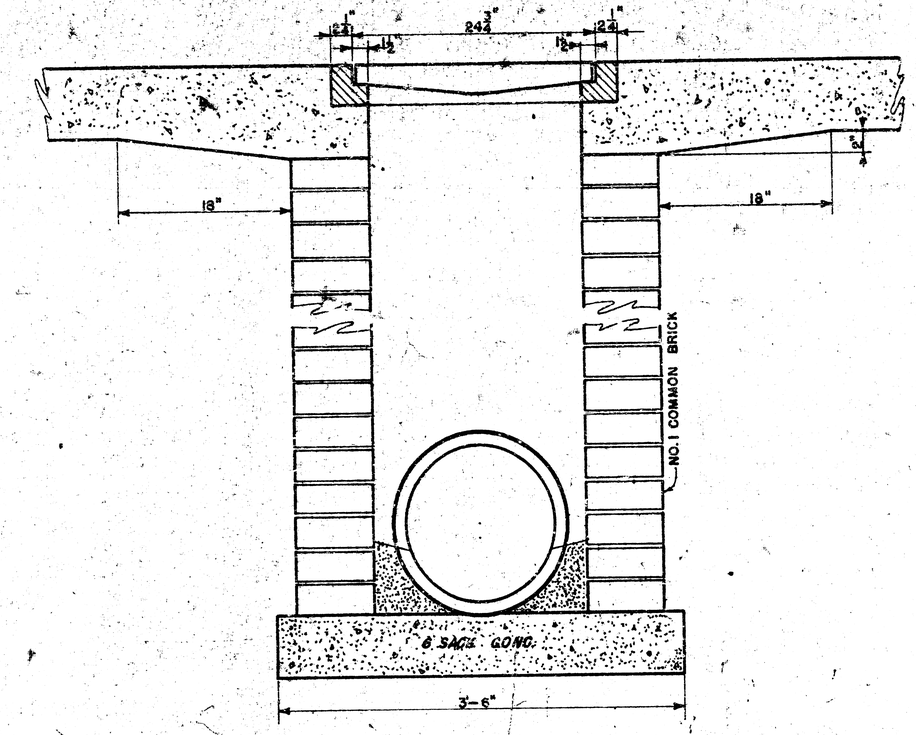
NOTE: Grates shall be imprinted on the top surface with "CITY OF WICHITA" using letters of least 1" in height. Other marking methods may be used only if approved by the engineer.

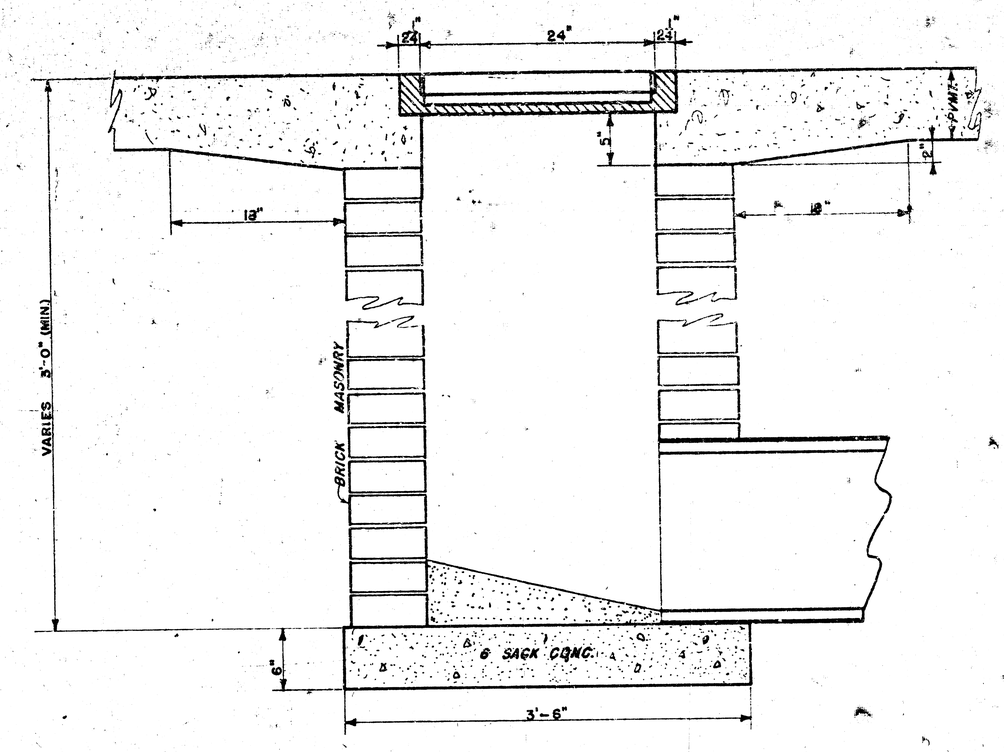


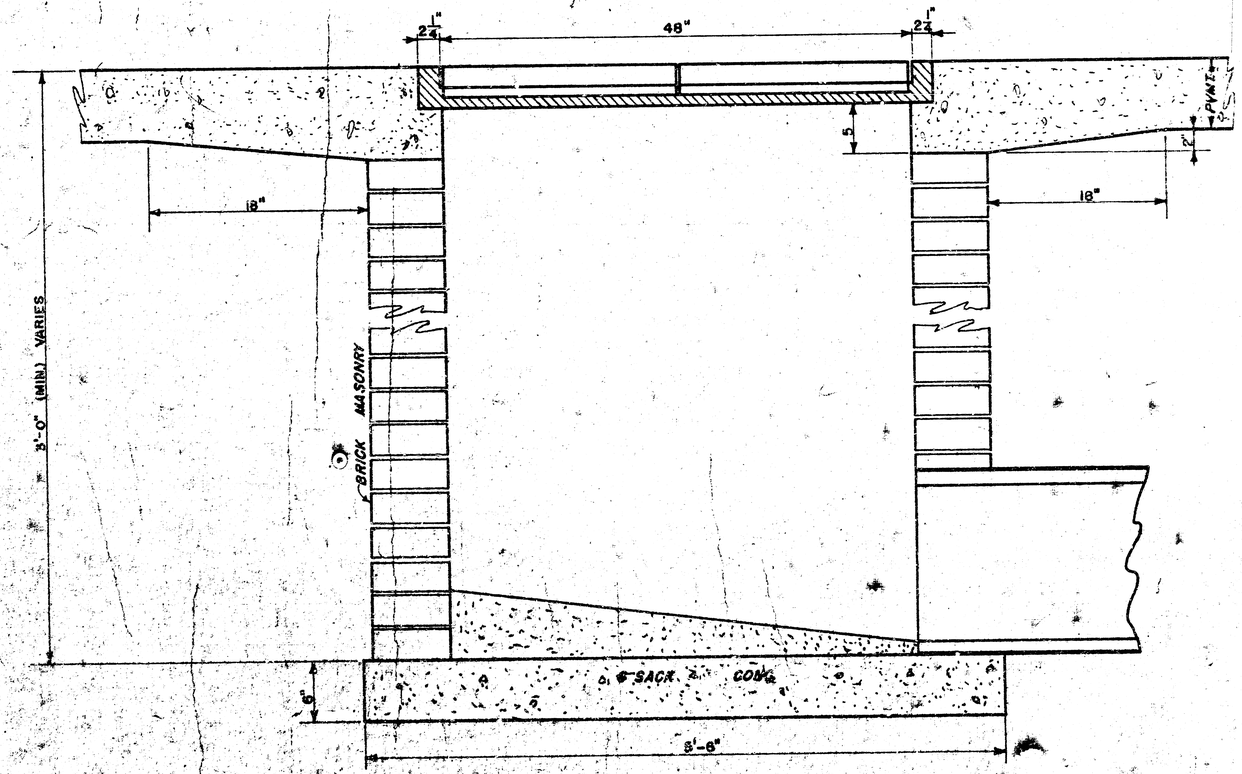
24"x24" Frame & Grate Detail



Double 24"x24" Frame Detail



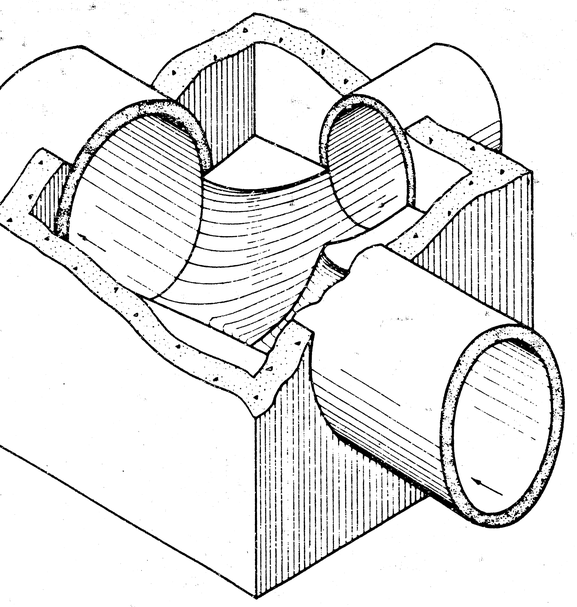




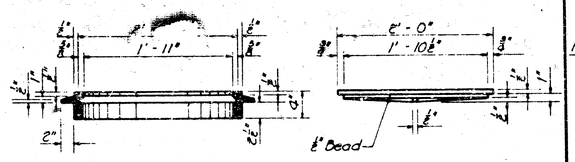
DROP INLET DETAILS

R. W. Linn City Engineer
City of Wichita, Kansas
Project
Project No.

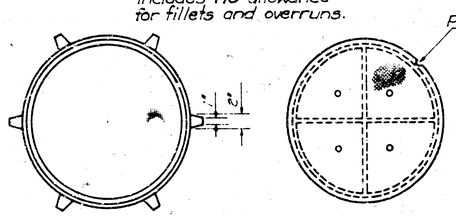
FHWA REG. NO.	State	Proj. No.	Fiscal Year	Sheet No.	No. Sheets
7	Kansas				



SECTIONAL VIEW (EXAMPLE IV)
Showing Floor Shaping

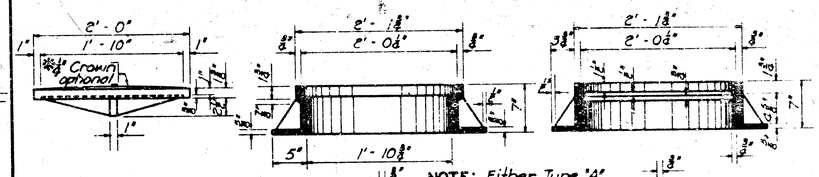


NOTE : Weight of castings includes no allowance for fillets and overruns.

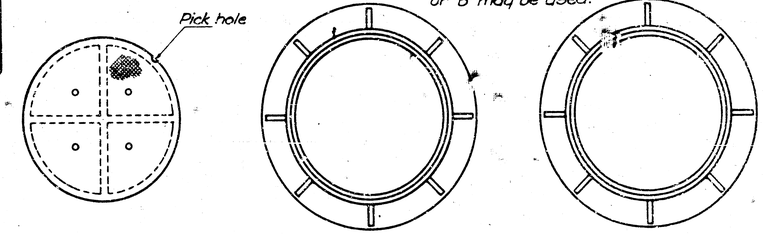


TYPE C
CAST IRON MANHOLE RING — Weight - 53 Lbs.
CAST IRON MANHOLE COVER — Weight - 64 Lbs.

LIGHT TYPE MANHOLE COVER & RING



NOTE: Either Type 'A' or 'B' may be used.



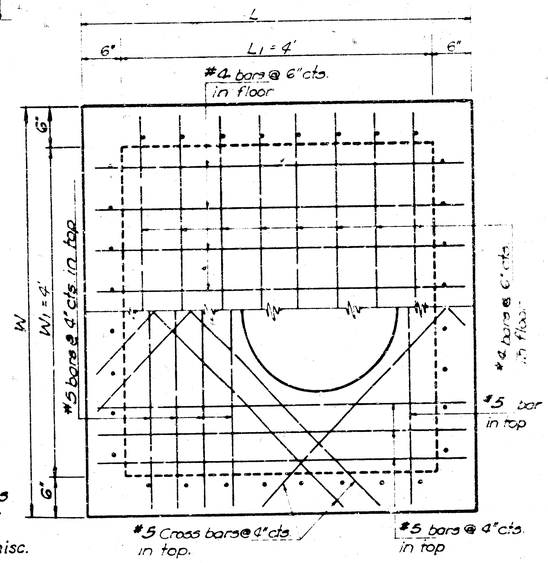
TYPE A & B
CAST IRON MANHOLE COVER — Weight - 134 Lbs.
Note: The weight without ¼" crown shall be 9 lbs. less than shown above.

TYPE A
CAST IRON MANHOLE RING — Weight = 192 Lbs.

TYPE B
CAST IRON MANHOLE RING — Weight = 198 Lbs.

HEAVY TYPE MANHOLE COVER & RING

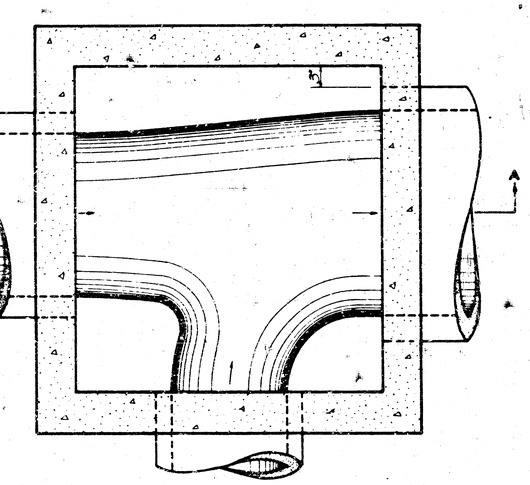
Where dimension "L" or "W" is greater than 6', use 8" slab thickness.



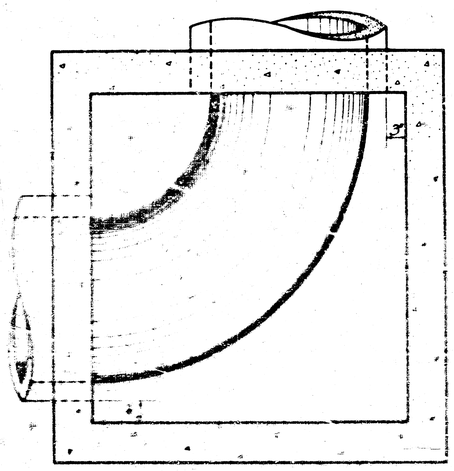
PLAN
(Showing top & floor Reinforcing.)

TYPICAL EXAMPLES OF VARIOUS PIPE COMBINATIONS

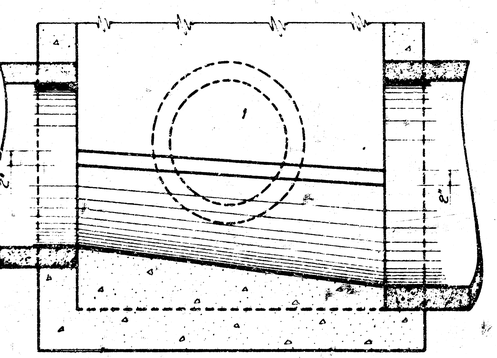
Showing method of shaping floor of manholes to provide increased hydraulic efficiency.
For reinforcing & other features see "PLAN" and "SECTION."

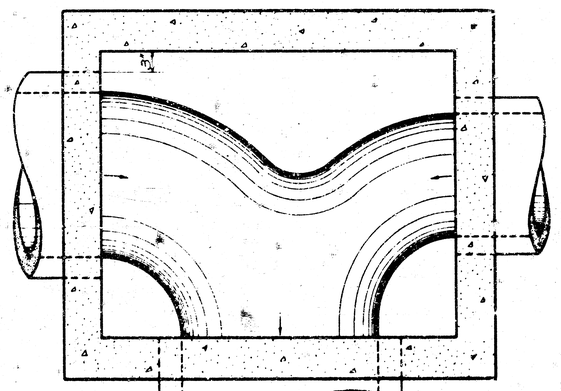


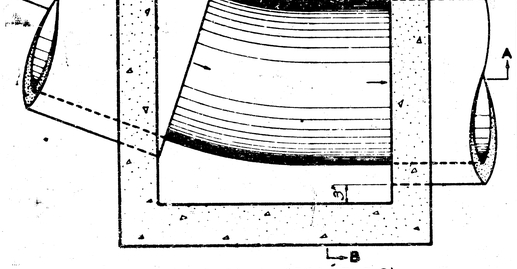
FLOOR PLAN (EXAMPLE IV)



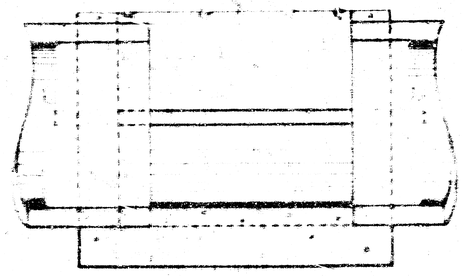
FLOOR PLAN (EXAMPLE II)



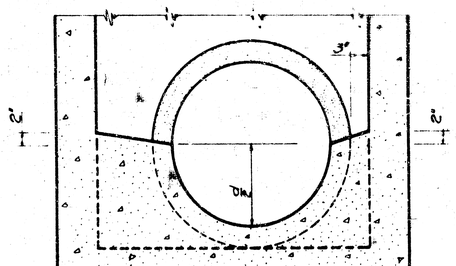




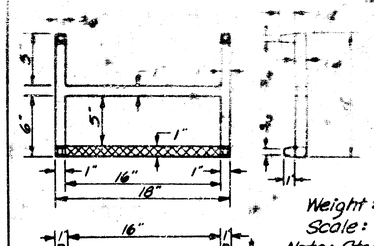
FLOOR PLAN (EXAMPLE I)



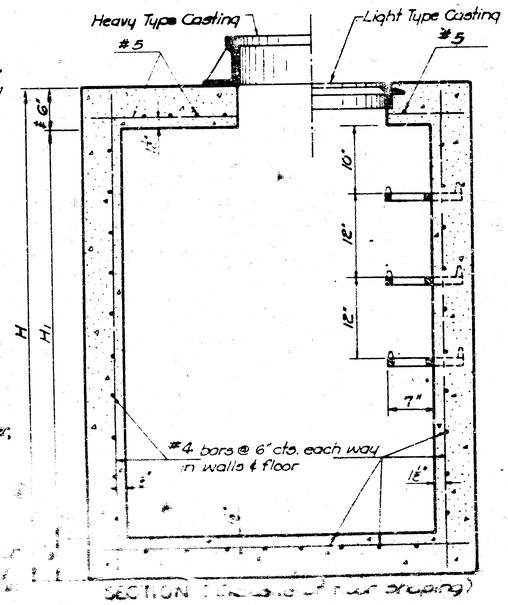
SECTION A-A (EXAMPLE I)



NOTE: Class 'A' concrete to be used thruout. Bevel all exposed edges with a ¾" triangular moulding.
At the contractor's option Class 'A' concrete (AE) may be used thruout, but payment shall be made as Cu. Yds of Class 'A' concrete misc.
In general, pipes will enter and leave the manhole at various positions. Where possible bend bars around pipes.
Floor of manhole to be shaped as shown in various "EXAMPLES" with unreinforced Class 'A' concrete.
Manhole opening and steps, where used, shall be placed to afford easy access to top of shaped invert. Top reinforcing bars to be adjusted accordingly.
All castings shall be gray iron and shall comply with ASTM A-48, Class 25 S.
All exposed cast iron surfaces (rings & covers) not subjected to traffic, shall be painted either in the shop or in the field with one coat of a zinc dust paint, followed by two field coats of aluminum paint.
No deductions in concrete quantities shall be made for pipe openings.
No additions in concrete quantities shall be made for shaping floor of Manholes.
When so ordered by the Engineer, the top of the manhole shall be supported by temporary falsework resting on the ground or on other construction.
Cast iron steps shall be placed in the manhole wall at the locations shown on the plans and shall be spaced 12" apart vertically in the manhole. The top step shall be not more than 18" nor less than 12" below the top of the manhole cover as shown on this sheet.



Weight : 19 lbs.
Scale : 1½" = 1'



SECTION (Showing floor shaping)

STATE HIGHWAY COMMISSION OF KANSAS

REINFORCED CONCRETE MANHOLE