PRIVATE SANITARY SEWER EXTENSION

TO SERVE

TARGET NORTHWEST

PRIVATE PROJECT NO. 1391 PPS (607861)

CITY OF WICHITA, KANSAS

NEIL D. CABLE, P.E.-CITY ENGINEER

INDEX OF SHEETS

SHEET NO. SU3.1	TITLE SHEET
SHEET NO. SU3.2	KEY MAP AND GENERAL NOTES
SHEET NO. SU3.3-SU3.5	PLAN/PROFILE
SHEET NO. SU3.6	TYPE "P" MANHOLE DETAILS
SHEET NO. SU3.7	FRAME AND COVER DETAILS
SHEET NO. SU2.9-SU2.10	PLAT
SHEET NO. SG2.11	LOT SPLIT
SHEET NO. SG2.1-SG2.4	SOIL EROSION BMP DETAILS

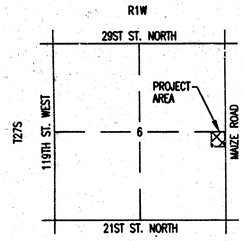

VICINITY MAP

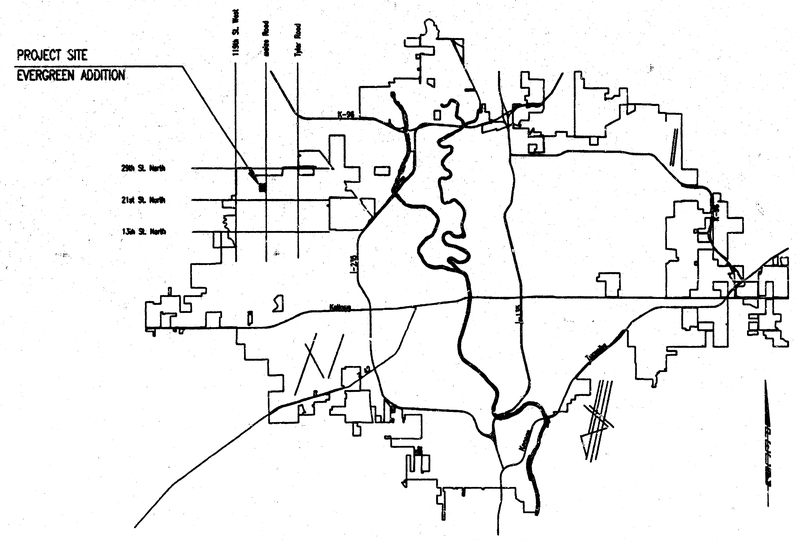

LOCATION MAP

APPROVED AS NOTED
By CITY ENGINEER OF WICHITA

Sanitary Sewers VRH 11/12/03

Storm Sewers _____

Driveway Approaches _____

Water Mains _____

Paving _____

AS-BUILT
1/5/04
Date
Signed

1/21/04
RDC
PDF

NOTE TO CONTRACTOR

INSPECTION AND TESTING FOR THIS PROJECT IS TO BE PROVIDED BY A LICENSED CONSULTING ENGINEERING FIRM CONTRACTED BY THE CONTRACTOR. SAID INSPECTION TO BE IN ACCORDANCE WITH THE CITY OF WICHITA STANDARD CONSTRUCTION ENGINEERING PRACTICES AND CERTIFIED BY A LICENSED PROFESSIONAL ENGINEER. NO WORK SHALL BE PERFORMED IN DEDICATED EASEMENTS OR PUBLIC RIGHT-OF-WAY BY THE CONTRACTOR UNTIL SUCH INSPECTION IS ARRANGED FOR AND REQUIRED BONDS HAVE BEEN SUBMITTED TO AND APPROVED BY THE CITY NOR SHALL ANY WORK BE COMMENCED IN DEDICATED EASEMENTS OR PUBLIC RIGHT-OF-WAY WITHOUT WRITTEN AUTHORIZATION BY THE CITY ENGINEER. IMPROVEMENTS PERFORMED UNDER THIS PROJECT SHALL NOT BE ACCEPTED BY THE CITY UNTIL ALL APPLICABLE DOCUMENTATION HAS BEEN SUBMITTED TO THE CITY ENGINEER. THIS MAY INCLUDE: RECORD DRAWINGS, INSPECTION LOGS, TEST DOCUMENTATION, TV TAPES, AND A CERTIFICATE OF COMPLETION. THE ABOVE SHALL BE PERFORMED BY THE CONSULTING FIRM CONTRACTED TO INSPECT THIS PROJECT.

TARGET

REVIEWED BY:

Site Development Manager ____ / ____
___ Revise and Resubmit ___ Not Reviewed ___ Approved

Project Architect ____ / ____
___ Revise and Resubmit ___ Not Reviewed ___ Approved

Project Engineer (M) ____ / ____
___ Revise and Resubmit ___ Not Reviewed ___ Approved

Project Engineer (E) ____ / ____
___ Revise and Resubmit ___ Not Reviewed ___ Approved

Project Engineer (S) ____ / ____
___ Revise and Resubmit ___ Not Reviewed ___ Approved

Approved only for conformance of the site construction documents to Target Developer Guide, Edition 2.3 and the Target building documents. Consultant is solely responsible for completeness, accuracy, and dimensions on the site construction documents.

ROD R. YOUNG
LICENSED
11488
KANSAS
PROFESSIONAL ENGINEER
11/12/03

NOVEMBER 2003

PLANS PREPARED BY

PROFESSIONAL ENGINEERING CONSULTANTS, P.A.

ENGINEERS

WICHITA, KANSAS

DSWR: BEK, KJW OPER: CSL SCALE: 1=1.00
Q:\2002\02603\002\PPSS\SSTITLE 11-12-2003 11:02:31 am

18 08 02 15

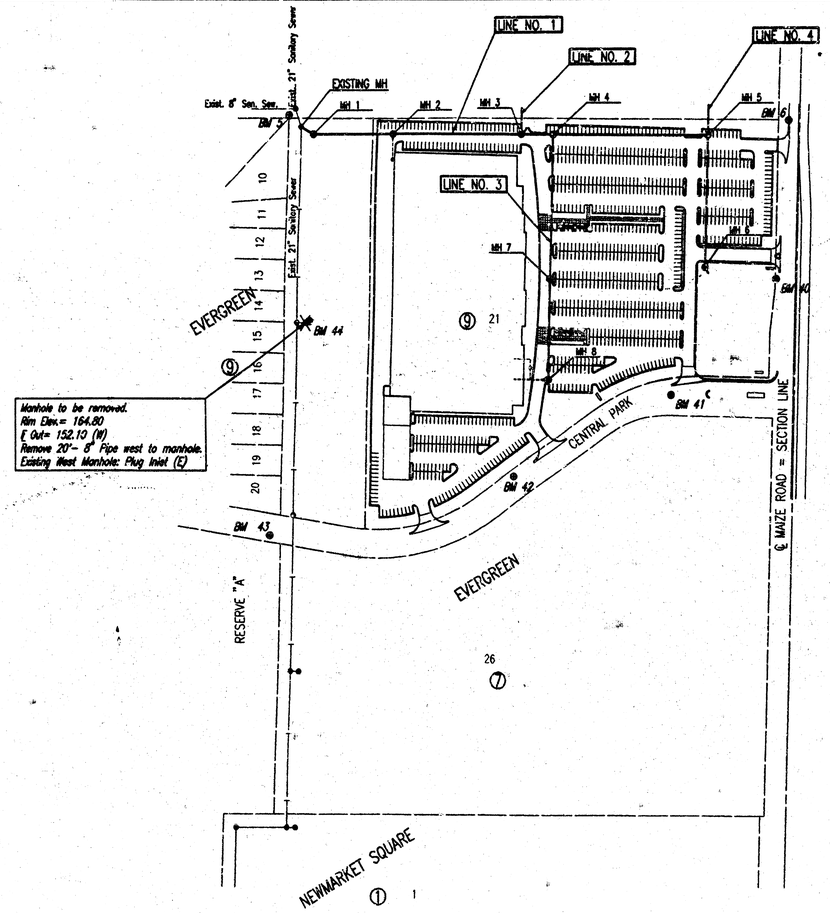

BENCH MARKS

Benchmark #5 "T" Post Set near N.E. cor Evergreen, 5' N. of E-W fence line, and in line with fence to south.
Elev.=161.83 C.O.W.
=1349.23 M.S.L.

Benchmark #6: Chiseled "d" on top back curb, W. curb line of Maize Rd. at beginning of curb 1/4± mile S. of 29th St. N.
Elev.=164.515 C.O.W.
1351.915 M.S.L.

Benchmark #40: RR Spike in W. face of 2nd power pole N. of Central Park St., on W. side of Maize Rd.
Elev.=164.57

Benchmark #41: Chiseled "d" on W. end median in Central Park St. on W. side of Maize Rd.
Elev.=163.32

Benchmark #42: Chiseled "d" on N. top of curb Central Park St. Approx. 650' W. of Maize Rd.
Elev.=164.03

Benchmark #43: Chiseled "d" on S. top of curb Central Park St. 15' W. and 47' S. of SW Corner Lot 21, Block 9
Elev.=165.00

Benchmark #44: Chiseled "X" on N. rim S.S. Manhole (E. of 2 manholes), 1000' W. of ℄ Maize Rd. and 450' N. of ℄ Central Park St.
Elev.=164.75

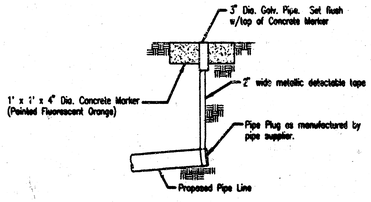

BURIED PIPE PLUG & MARKER DETAIL

(PLUGGING & STAKING SHALL BE SUBSIDIARY TO THE LUMP SUM PRICE BID FOR PIPE IN PLACE)

GENERAL NOTES

1. ALL CONSTRUCTION AND MATERIALS TO COMPLY WITH CITY OF WICHITA SPECIFICATIONS AND STANDARDS.
2. ALL ELEVATIONS SHOWN ARE BASED ON CITY OF WICHITA DATUM.
3. THE CONTRACTOR SHALL LIMIT THE EXTENT OF TRENCH TO REMAIN OPEN OVERNIGHT AND WEEKENDS TO LESS THAN 50 FEET.
4. AT LEAST 72 HOURS PRIOR TO BEGINNING EXCAVATION (EXCLUDING WEEKENDS AND HOLIDAYS), THE CONTRACTOR SHALL CONTACT THE KANSAS ONE-CALL SYSTEM, A UTILITY LOCATION SERVICE, AT (316) 687-2470 TO REQUEST THE LOCAL UTILITY COMPANIES MARK ANY EXISTING LINES WITHIN THE PROJECT AREA.
5. UNDERGROUND UTILITY SERVICE LINES AND OVERHEAD UTILITY POLE LINES ARE TO BE ADJUSTED AS NECESSARY BY OTHERS PRIOR TO CONSTRUCTION UNLESS THE PLANS SPECIFICALLY CALL FOR THEIR ADJUSTMENT BY THE CONTRACTOR OR UNLESS THE PLANS SPECIFICALLY IDENTIFY A UTILITY TO BE ADJUSTED BY ITS OWNER DURING CONSTRUCTION. EXISTING UTILITIES AND THEIR LOCATIONS, AS SHOWN ON THE PLANS, REPRESENT THE BEST INFORMATION OBTAINABLE FOR THE DESIGN. THE CONTRACTOR WILL BE REQUIRED TO WORK AROUND EXISTING UTILITIES WITHIN THE RIGHT-OF-WAY WHICH DO NOT CONFLICT WITH PROPOSED CONSTRUCTION.
6. THE CONTRACTOR SHALL BE RESPONSIBLE FOR PRESERVING PROPERTY IRONS. THE CONTRACTOR WILL BE REQUIRED TO RE-ESTABLISH ANY PROPERTY IRONS WHICH ARE DAMAGED OR DESTROYED BY HIS CONSTRUCTION OPERATIONS. SUCH IRONS SHALL BE RE-ESTABLISHED BY A LICENSED LAND SURVEYOR IN ACCORDANCE WITH STATE LAWS. ALL COSTS FOR THIS WORK SHALL BE SUBSIDIARY TO THE LUMP SUM PRICE BID FOR "SITE RESTORATION".
7. CONTRACTOR SHALL PROVIDE POSITIVE DRAINAGE AWAY FROM ALL MANHOLE COVERS.
8. MANHOLES SHALL BE TYPE "B" MANHOLES. MANHOLES SHALL BE CONSTRUCTED IN ACCORDANCE WITH THE STANDARD SPECIFICATIONS AND THE STANDARD DETAIL DRAWINGS.
9. ALL LAWN/TURF AREAS DISTURBED BY CONSTRUCTION OF THE PROPOSED IMPROVEMENTS SHALL BE RESTORED WITH THE SAME GRASS/SOD AS EXISTING. RESTORATION OF DISTURBED AREAS SHALL "CLUDE, BUT NOT BE LIMITED TO, TOP SOIL PREPARATION, SEEDING, MULCH, AND/OR RESEEDING. ALL SEEDING/SODDING WORK SHALL BE IN ACCORDANCE WITH THE CITY OF WICHITA STANDARD SPECIFICATIONS AND THE CITY OF WICHITA ADMINISTRATIVE REGULATION NO. AR78 WHICH GOVERNS CLEANUP AND RESTORATION OR REPLACEMENT FOLLOWING CONSTRUCTION. ALL COSTS FOR THIS WORK SHALL BE SUBSIDIARY TO THE LUMP SUM PRICE BID FOR "SITE RESTORATION".
10. RUBBLE FROM THE REMOVAL OF MISCELLANEOUS STRUCTURES INCLUDING ANY TREES REMOVED, TREE TRIMMINGS, AND EXCESS EXCAVATION WHICH IS TO BE WASTED SHALL BE DISPOSED OF ON SITES PROVIDED BY THE CONTRACTOR. THESE SITES SHALL ALSO BE APPROVED BY THE ENGINEER AS TO SUITABILITY, APPEARANCE, AND SITE LOCATION. LOCATIONS THAT, IN THE OPINION OF THE ENGINEER, WILL LEAVE AN UNSIGHTLY APPEARANCE WILL NOT BE APPROVED. ALL DISPOSAL SITES MUST BE APPROVED BY THE KANSAS DEPARTMENT OF HEALTH AND ENVIRONMENT. MATERIAL EITHER STOCKPILED OR DISPOSED OF IN A FLOOD PLAIN WILL REQUIRE A KANSAS STATE BOARD OF AGRICULTURE PERMIT. ANY MATERIAL DUMPED IN WATERS OF THE UNITED STATES OR WETLANDS IS SUBJECT TO U.S. CORPS. OF ENGINEERS PERMITTING REGULATIONS. ANY MATERIAL BURIED OR STOCKPILED BEYOND APPROVED CONSTRUCTION LIMITS MAY REQUIRE ARCHAEOLOGICAL INVESTIGATIONS UNLESS BURIED IN A PREVIOUSLY APPROVED DISPOSAL LOCATION.
11. THE CONTRACTOR SHALL AVOID REMOVAL OR TRIMMING OF ANY TREES OR SHRUBS WHERE POSSIBLE. WHERE THE CONTRACTOR BELIEVES THE REMOVAL OR TRIMMING IS UNAVOIDABLE, HE SHALL COORDINATE SUCH WORK WITH THE ENGINEER. COSTS FOR TREE/SHRUB REMOVAL AND TRIMMING REGARDLESS OF SIZE SHALL BE CONSIDERED SUBSIDIARY TO THE LUMP SUM PRICE BID FOR "SITE CLEARING".
12. THE CONTRACTOR SHALL PREVENT ANY CONSTRUCTION DEBRIS FROM ENTERING THE EXISTING SANITARY SEWER DURING CONSTRUCTION.
13. THE CONTRACTOR SHALL GIVE ALL PROPERTY OWNERS AND/OR TENANTS OF DEVELOPED PROPERTY ABUTTING THE CONSTRUCTION OF THIS PROJECT A MINIMUM OF TEN (10) DAYS ADVANCE NOTICE PRIOR TO START OF CONSTRUCTION.
14. ALL APPROVED EXCESS EXCAVATION WHICH IS TO BE WASTED SHALL BE STOCKPILED WITHIN TARGET NORTHWEST AT NO ADDITIONAL COST TO THE OWNER. STOCKPILE LOCATIONS SHALL BE AS APPROVED BY THE DEVELOPER AND IN ACCORDANCE WITH GENERAL NOTE NO. 10 ABOVE.
15. CONTRACTOR IS REQUIRED TO MAINTAIN CONTINUOUS FLOW OF SEWAGE IN EXISTING MAINS AT ALL TIMES.
16. THE CONTRACTOR SHALL SEED ALL AREAS DISTURBED BY CONSTRUCTION ACTIVITIES WITH TEMPORARY RYE GRASS. RYE GRASS SEED SHALL BE PLANTED AT A MINIMUM RATE OF SIX (6) POUNDS PER ONE THOUSAND (1,000) SQUARE FEET. THIS TEMPORARY SEEDING MAY BE OMITTED ONLY IF OTHER SEEDING IS REQUIRED IN ACCORDANCE WITH GENERAL NOTE NO. 9 ABOVE. TEMPORARY SEEDING OR PERMANENT SEEDING/SODDING SHALL BE APPLIED WITHIN 14 DAYS AFTER THE AREA HAS BEEN DISTURBED.
17. THE CONTRACTOR SHALL NOT BURY MANHOLES THAT HAVE RIM ELEVATIONS WHICH ARE LOWER THAN EXISTING GROUND AT THE MANHOLE. THE GROUND AROUND SUCH MANHOLES AND ALONG THE SEWER ALIGNMENT SHALL BE BACKFILLED TO THE APPROXIMATE ELEVATION OF THE PROPOSED GROUND ELEVATION SHOWN ON THE "PLAN/PROFILE SHEETS. THE CONTRACTOR SHALL PROVIDE DRAINAGE AWAY FROM THESE MANHOLES AND SEWER LINES BY CONSTRUCTION OF TEMPORARY DITCHES OR SLOPING THE GROUND AS REQUIRED. ALL COSTS FOR THIS WORK SHALL BE CONSIDERED SUBSIDIARY TO THE INSTALLED BID PRICE FOR MANHOLES OR PIPE.
18. THE CONTRACTOR SHALL PROVIDE MOUNDED EARTH AT MANHOLES AND CLEANOUTS THAT HAVE TOP ELEVATIONS GREATER THAN 1 FOOT ABOVE EXISTING GRADE, AS SHOWN ON THE PLANS. COSTS FOR MOUNDING SHALL BE CONSIDERED SUBSIDIARY TO THE LUMP SUM PRICE BID FOR "EASEMENT GRADING."
19. INTERURBAN TRAFFIC GENERATED OUTSIDE THE PROJECT AREA AND LOCAL BUSINESS OR RESIDENTIAL TRAFFIC GENERATED WITHIN THE PROJECT AREA ARE TO BE CARRIED THROUGH CONSTRUCTION AS FURTHER PROVIDED BY PROJECT SPECIAL PROVISIONS.
20. IN AREAS WHERE FUTURE PAVEMENT IS ANTICIPATED, SUCH AS PARKING LOTS OR DRIVES, THE SANITARY SEWER TRENCH SHALL BE SAND FILLED AND FLUSHED WITH WATER PER THE REQUIREMENTS LISTED IN THE STANDARD SPECIFICATIONS FOR THE CITY OF WICHITA UNLESS FLOWABLE FILL IS SPECIFIED ON THE PLANS. ALL SANITARY SEWER TRENCHES ADJACENT TO STREET OR ROAD RIGHT-OF-WAY SHALL BE BACKFILLED WITH JETTED SAND UNLESS OTHERWISE SPECIFIED IN THE PLANS. COST FOR SAND FILL AND FLUSHING SHALL BE CONSIDERED SUBSIDIARY TO THE PRICE BID FOR PIPE INSTALLATION.
21. ALL SITE EARTH WORK SHALL BE COMPLETED PRIOR TO SANITARY SEWER CONSTRUCTION.
22. THE CONTRACTOR SHALL VERIFY ALL MANHOLE RIM ELEVATIONS WITH FINAL PAVEMENT ELEVATIONS. WHEN LOCATED IN PAVED AREAS, ALL MANHOLE RIMS ARE TO BE FLUSH WITH THE TOP FINAL PAVEMENT. WHERE MANHOLE IS SET OUTSIDE PROPOSED PAVEMENT THE RIM ELEVATION SHALL BE 0.4' ABOVE PROPOSED FINAL GRADE.

TARGET

REVIEWED BY:

Site Development Manager ____/____
___ Revise and Resubmit ___ Not Reviewed ___ Approved

Project Architect ____/____
___ Revise and Resubmit ___ Not Reviewed ___ Approved

Project Engineer (M) ____/____
___ Revise and Resubmit ___ Not Reviewed ___ Approved

Project Engineer (E) ____/____
___ Revise and Resubmit ___ Not Reviewed ___ Approved

Project Engineer (S) ____/____
___ Revise and Resubmit ___ Not Reviewed ___ Approved

Approval only for conformance of the site construction documents to Target Developer Guide, Edition 2.3 and the Target building documents. Consultant is solely responsible for completeness, accuracy, and dimensions on the site construction documents.

ROD R. YOUNG ENGINEER REGIONAL ENGINEER

No.	Revision	By	Date

CITY OF WICHITA, KANSAS
NEIL D. CABLE, P.E.- CITY ENGINEER
TARGET NORTHWEST

KEY MAP AND GENERAL NOTES

PRIVATE PROJECT NO. 1391 PPS (607861)

Professional Engineering Consultants, P.A.
303 S. TOPEKA • WICHITA, KANSAS 67202
316-262-2691 • FAX 316-262-3003

Designed by	RRY, KAW	Job No.	35-02693-2-5054
Drawn by	CSL, DCM	Date	AUGUST 2003

Sht. SU3.2 of 14

DSNR: KAW OPER: CSL SCALE: 1=150.0'
Q:\2002\02693\DGN\PPSS\SKEYMAP 11-12-2003 11:03:18 am

N-8,935.6127, E-3,924.7383
Sta. 0+00.0
Core existing concrete MH wall and Install outside drop connection. Seal new 8" Pipe to MH with an approved waterstop gasket and non-shrink grout. Construct a minimum of 3" reinforced Concrete Encasement from MH wall. Reshape MH floor to provide smooth flow. Repair Interior Linings/Coatings as necessary. This work shall be considered subsidiary to the price bid for pipe in place.

N-8,919.7102, E-3,954.4513
Sta. 0+33.7
Const. MH 1
Standard MH

CAUTION !!!
Proposed 24" RCP
Storm Sewer

CAUTION !!!
Proposed 24" RCP
Storm Sewer

CAUTION !!!
Prop. 8" Waterline

N-8,919.0076, E-4,144.0500
Sta. 2+23.3
Const. MH 2
Standard MH

Install 1- 6" Stub and Plug

N-8,917.8655, E-4,445.8479
Sta. 5+26.1
Const. MH 3
Standard MH

LINE NO. 2
See sheet no. SU3.4

CAUTION !!!
Proposed 30" RCP
Storm Sewer

N-8,917.6224, E-4,517.8474
Sta. 5+97.1
Const. MH 4
Outside Drop MH

CAUTION !!!
Prop. 8" Waterline

N-8,916.2749, E-4,881.4449
Sta. 9+60.7
Const. MH 5
Standard MH

LINE NO. 4
See sheet no. SU3.5

Proposed Pond

Future Pavement

20' Utility Easement

Woven Wire Fence

Cat. Buried Elec.

Tel.

Fiber Optic

Gas

Water

Sewer

Storm Sewer

Fence

Limits of Prop. Pvmt. (by others)

20' Utility Easement (by Separate Instrument)

PROPOSED BUILDING
F.F. = 167.60

Edge of Water

Install 33.7 L.F. 8" Pipe

Install 189.6 L.F. 8" Pipe

6" Service Line
(Reference Target Site Utility Plans)

Install 302.8 L.F. 8" Pipe

Install 71.0 L.F. 8" Pipe

LINE NO. 3
See sheet no. SU3.5

Install 363.6 L.F. 8" Pipe

SCALE:
PLAN: LAT. & LONG. 0 40 80
PROFILE: HORIZ. SAME AS ABOVE
VERT. 0

REVIEWED BY:
Site Development Manager ___ Not Reviewed ___ Approved
Project Architect ___ Revise and Resubmit ___ Not Reviewed ___ Approved
Project Engineer (M) ___ Revise and Resubmit ___ Not Reviewed ___ Approved
Project Engineer (E) ___ Revise and Resubmit ___ Not Reviewed ___ Approved
Project Engineer (S) ___ Revise and Resubmit ___ Not Reviewed ___ Approved

Approval only for conformance of the site construction documents to Target Development Guidelines. Approval does not relieve the Project Engineer of responsibility for completeness, accuracy, and errors/omissions on the site construction documents.

TARGET

ROD R. YOUNG
NUMBER 14663
PROFESSIONAL ENGINEER
11/24/03

FOR PLAT COORDINATES
SEE SHEET NO. SU2.10

SANITARY SEWER LINE NO. 1

** See General Note No. 21.

PLAN CHECKED CHECKED

PROFILE CHECKED CHECKED

DATE BY

Proposed Ground (by others) **

Existing Ground

E In = 148.97
from shist 21" PVC (MH7)

E In = 153.61
from 1 - 6" Stub (S)

E In = 157.97
from LINE NO. 2

E In = 158.10
from LINE NO. 4

E In = 154.98
from LINE NO. 3

189.60 L.F. 8" Pipe @ 1.50%

302.80 L.F. 8" Pipe @ 0.40%

71.00 L.F. 8" Pipe @ 0.40%

363.60 L.F. 8" Pipe @ 0.40%

0+00 1+00 2+00 3+00 4+00 5+00 6+00 7+00 8+00 9+00

175 170 165 160 155 150 145 140 135

CITY OF WICHITA, KANSAS
MCL D. CABLE, P.E. - CITY ENGINEER
TARGET NORTHWEST

SANITARY SEWER LINE NO. 1

PRIVATE PROJECT NO. 1781 PPS (607861)

Professional Engineering Consultants, P.A.
303 S. TOPEKA • WICHITA, KANSAS 67202
316-262-2691 • FAX 316-262-3003

Designed By IRR, KJW
Drawn By CSL, DCM
Job No. 35-02693-2-5054
Date AUGUST 2003

Sheet SU3.3 of 14

DSNR: BED, KJW OPER: CSL SCALE: 1=40.00
G:\2002\02693\002\PPS\SSHPP01 11-12-2003 11:05:03 am

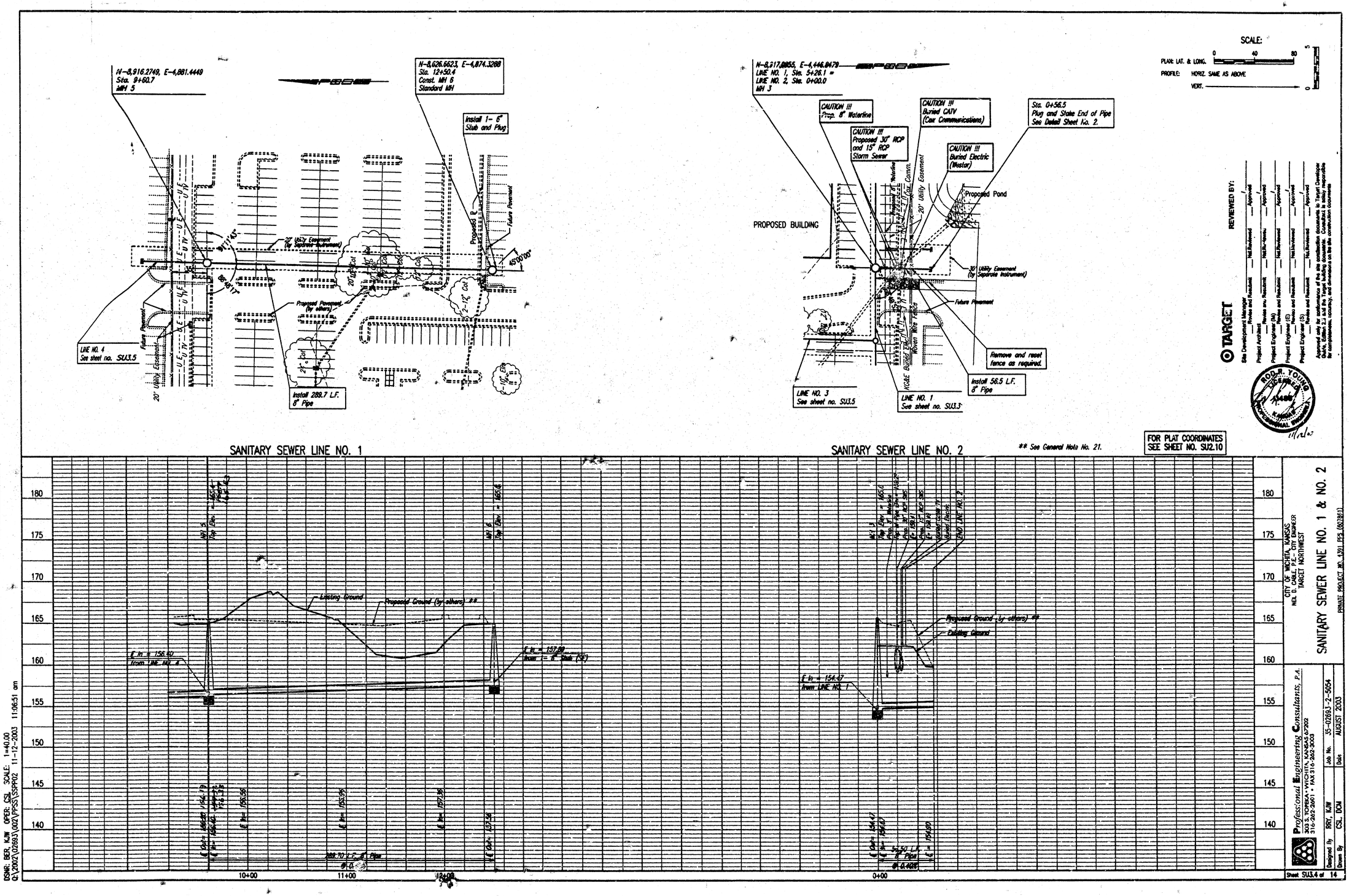

CITY OF WICHITA, KANSAS
NEIL D. CABLE, P.E. - CITY ENGINEER
TARGET NORTHWEST

SANITARY SEWER LINE NO. 1 & NO. 2

PRIVATE PROJECT NO. 4391 PFS (607861)

Professional Engineering Consultants, P.A.
303 S. TOPEKA • WICHITA, KANSAS 67202
316-262-2601 • FAX 316-262-3003

Designed By RRY, KJW | Job No. 35-02693-2-5054
Drawn By CSL, DCM | Date AUGUST 2003

Sheet SU3.4 of 14

PLAN CHECKED CHECKED BY DATE

PROFILE CHECKED CHECKED BY DATE

DSNR: BER, KJW OPER: CSL SCALE: 1=40.00
Q:\2002\02693\002\PPSS\SSPP02 11-12-2003 11:06:51 am

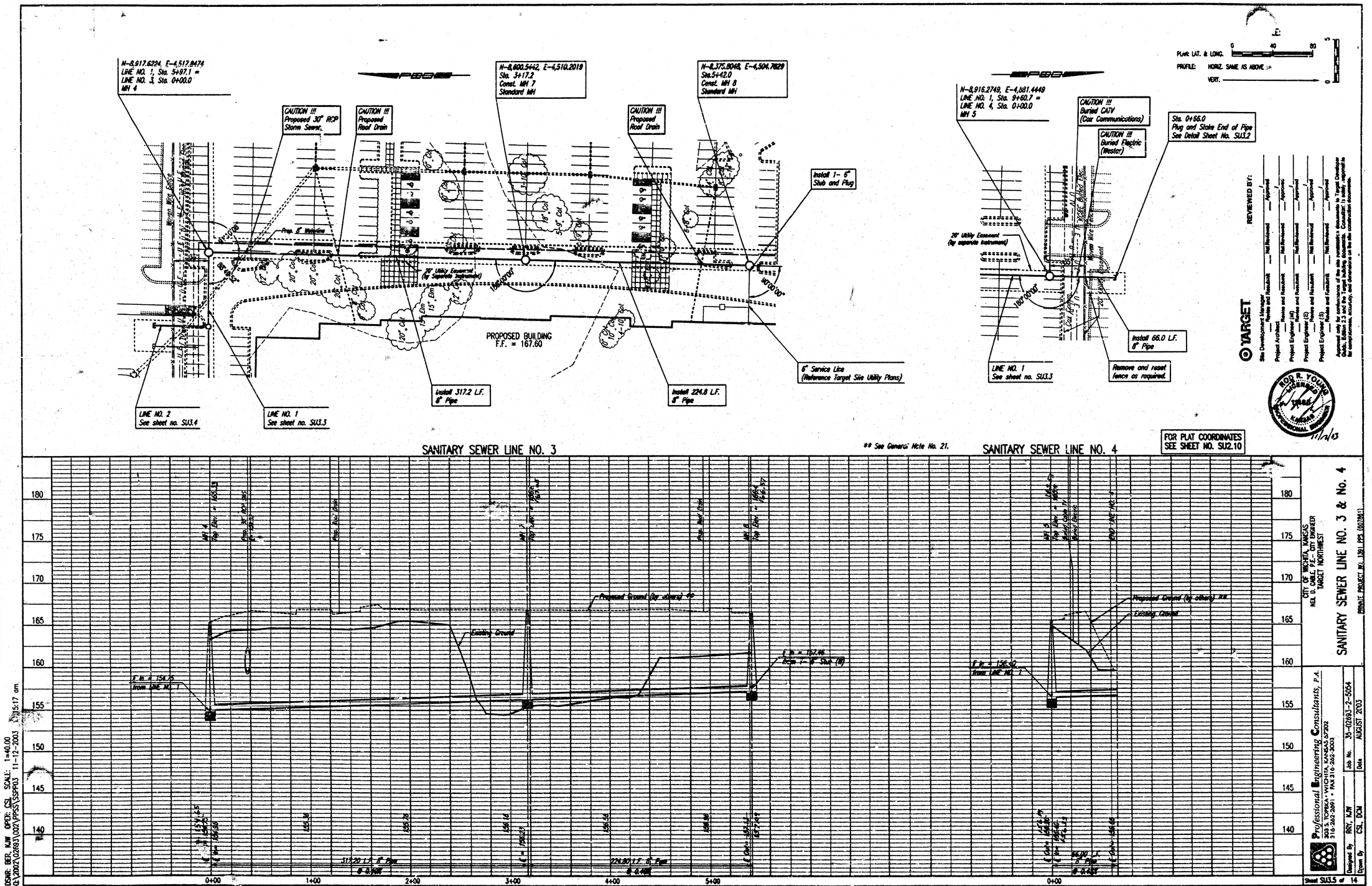

PLAN CHECKED CHECKED BY DATE

PROFILE CHECKED CHECKED BY DATE

DSNR: BER, KJW OPER: CSL SCALE: 1=40.00
Q:\2002\02693\002\PPSS\SSPP03 11-12-2003 15:17 am

CITY OF WICHITA, KANSAS
NEIL D. CABLE, P.E.- CITY ENGINEER
TARGET NORTHWEST

SANITARY SEWER LINE NO. 3 & No. 4

PRIVATE PROJECT NO. 1391 PPS (607861)

Professional Engineering Consultants, P.A.
303 S. TOPEKA • WICHITA, KANSAS 57202
316-262-2691 • FAX 316-262-3003

Designed By RRY, KJW
Drawn By CSL, DCM
Job No. 35-02693-2-5054
Date AUGUST 2003

Sheet SU3.5 of 14

SEWER APPURTENANCES DETAILS

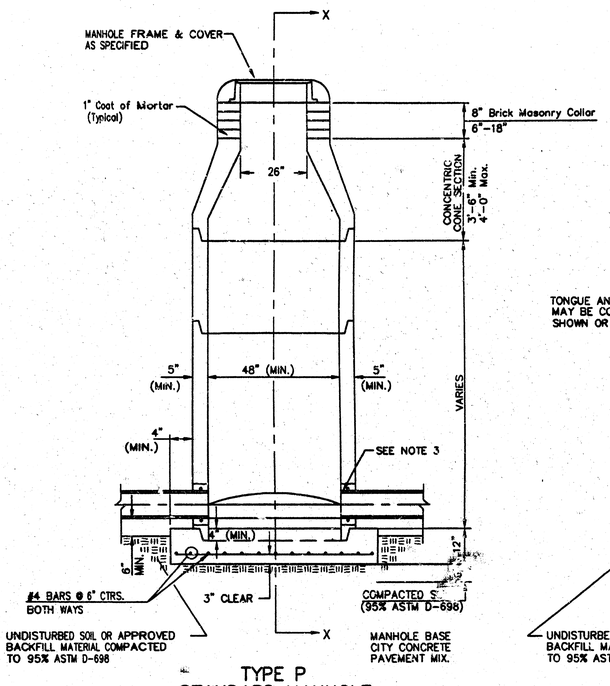

TYPE P
STANDARD MANHOLE

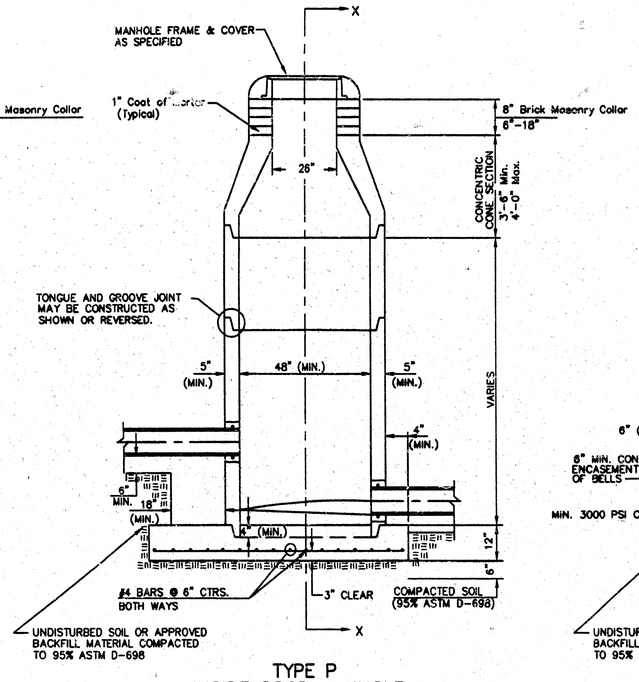

TYPE P
INSIDE DROP MANHOLE

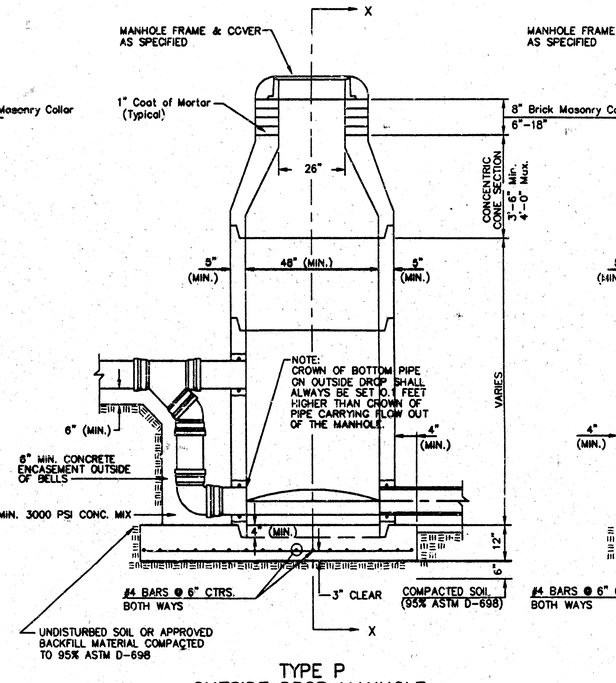

TYPE P
OUTSIDE DROP MANHOLE

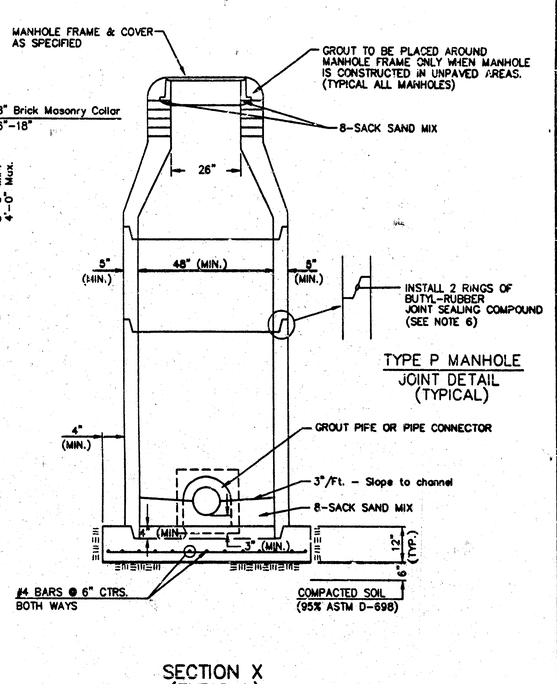

SECTION X
(TYPICAL)

GENERAL NOTES

PRECAST MANHOLE NOTES

1. ALL PRECAST CONCRETE MANHOLE SECTIONS SHALL CONFORM TO THE LATEST REVISIONS OF A.S.T.M. C478 AS MODIFIED BY THE SPECIFICATIONS.
2. NON-SHRINK GROUT SHALL BE NON-METALLIC TYPE.
3. APPROVED FLEXIBLE WATERSTOP GASKETS SHALL BE INSTALLED TO JOIN THE SEWER TO THE MANHOLE WALL WHEN A.B.S. COMPOSITE PIPE OR P.V.C. PIPE IS USED. FOR OTHER TYPES OF PIPE THE SEWER SHALL BE GROUTED IN PLACE WITH NON-SHRINK GROUT. THE SEWER PIPE SHALL BE SUPPORTED WITH CONCRETE ENCASEMENT A MINIMUM OF 3 FEET FROM THE MANHOLE WALL AND TO THE FIRST JOINT FOR V.C.P. SUCH THAT THE JOINT REMAINS FLEXIBLE.
4. ALL INSIDE SURFACES OF THE CONCRETE MANHOLE WHICH WOULD BE EXPOSED TO SEWER GAS SHALL BE COATED WITH 2 COATS TNEMEC SERIES 66 HI-BUILD EPOXOLINE, DRY THICKNESS OF 8 MILS (MIN.)
5. EXTERIOR MANHOLE WALLS SHALL BE COATED WITH 1 COAT MOBILARMA 633 BITUMINOUS COATING.
6. JOINT SEALING COMPOUND SHALL BE KENT SEAL NO. 2 OR APPROVED EQUAL.
7. PRECAST MANHOLES SHALL BE SET AT LEAST 4 INCHES INTO THE MANHOLE BASE.
8. TOP OF MANHOLE FLOOR SLAB SHALL BE AT LEAST 3 INCHES BELOW THE FLOW LINE OF THE OUTLET PIPE TO INSURE SUFFICIENT MINIMUM THICKNESS OF SHAPED INVERT.
9. LIFTING HOLES SHALL BE FILLED WITH NON-SHRINK GROUT AND THE INTERIOR SURFACE COATED AS SPECIFIED.
10. MORTAR USED IN MASONRY CONSTRUCTION SHALL CONTAIN 8 SACKS OF CEMENT PER CUBIC YARD. CONCRETE USED IN MANHOLE BASES SHALL CONFORM TO THE REQUIREMENTS OF CONCRETE FOR CONCRETE PAVEMENT CONSTRUCTION AS SPECIFIED IN THE CITY STANDARD PAVING SPECIFICATIONS USING CITY CONCRETE PAVEMENT MIX WITHOUT AIR ENTRAINING ADMIXTURE. MORTAR SHALL BE PLACED AROUND THE MANHOLE RING AS SHOWN ON THE DRAWINGS WHEN MANHOLES ARE CONSTRUCTED IN UNPAVED AREAS. MANHOLES CONSTRUCTED WHERE PIPE SIZES ARE SMALLER THAN 24" SHALL HAVE AN INSIDE DIAMETER OF 4'. MANHOLES CONSTRUCTED WHERE PIPE SIZES ARE 24" OR LARGER SHALL HAVE AN INSIDE DIAMETER OF 5'. COMPLETED MANHOLE SHALL BE WITHOUT LEAKS AND WATER TIGHT.
11. REINFORCING STEEL SHALL BE INSTALLED IN THE MANHOLE BASES AND SHALL CONSIST OF NO. 4 BARS PLACED ON 6" CENTERS IN BOTH DIRECTIONS. THE MANHOLE BASE REINFORCEMENT SHALL BE PLACED AT LEAST 3" ABOVE THE BOTTOM OF THE MANHOLE BASE. ALL COSTS FOR FURNISHING AND INSTALLING REINFORCING STEEL SHALL BE INCLUDED IN THE UNIT PRICE BID FOR THE MANHOLE.
12. OPENINGS SHALL BE CUT INTO THE MANHOLE WALL WHEN OUTSIDE DROPS ARE CONSTRUCTED ON EXISTING MANHOLES. SUCH OPENINGS CUT INTO EXISTING MANHOLES SHALL BE AS SMALL AS PRACTICAL TO FACILITATE INSTALLING AND CONNECTING THE NEW PIPE IN PLACE. WATERSTOP GASKETS SHALL BE USED WITH P.V.C. AND A.B.S. COMPOSITE PIPE. THE NEW PIPE SHALL BE GROUTED INTO THE OPENING USING AN APPROVED NONSHRINK GROUT FOR THE FULL MANHOLE WALL THICKNESS. THE EXTERIOR OF THE COMPLETED CONNECTION SHALL BE SEALED WITH AN APPROVED BITUMINOUS COATING SUCH THAT THE CONNECTION WILL BE WATER TIGHT. FLOOR OF MANHOLE SHALL BE MODIFIED TO FORM NEW FLOW CHANNEL FOR THE NEW CONNECTION AS INDICATED BY THE DRAWING. THIS WORK, INCLUDING MODIFICATION OF MANHOLE FLOOR, SHALL BE PAID FOR AT THE UNIT PRICE BID FOR OUTSIDE DROP STACK CONSTRUCTED ON EXISTING MANHOLE.
13. THE FLOORS OF ALL MANHOLES SHALL BE SHAPED WITH FLOW CHANNELS SUCH THAT THE MANHOLES WILL BE SELF CLEANING AND FREE OF AREAS WHERE SOLIDS COULD BE DEPOSITED AS SEWAGE FLOWS THROUGH THE MANHOLE FROM ALL INLET PIPES TO THE OUTLET PIPE. FLOW CHANNELS SHALL BE FORMED TO MATCH THE BOTTOM HALVES OF THE INFLOWING PIPES AND THE OUTFLOWING PIPE AS SHOWN BY THE DRAWINGS EXCEPT FOR INSIDE DROP MANHOLES. FLOW CHANNELS FOR INSIDE DROP MANHOLES SHALL BE CONSTRUCTED AS INDICATED BY THE DRAWING. MANHOLE FLOORS SHALL HAVE SLOPES OF 3 INCHES PER FOOT IN THE AREAS OUTSIDE OF THE FLOW CHANNELS SLOPED TOWARD THE FLOW CHANNELS. PIPES LAID THROUGH MANHOLES SHALL HAVE THE TOP HALF REMOVED TO NEAT LINES FOR THE FULL INSIDE DIAMETER OF THE MANHOLE. MANHOLE FLOORS SHALL THEN BE SHAPED AROUND THE BOTTOM HALF OF THE PIPE WHICH FORMS THE FLOW CHANNEL.
14. PIPES INSTALLED WITHIN THE EXCAVATION MADE FOR THE MANHOLE SHALL BE CRADLED WITH CONCRETE TO THE LIMITS OF THE MANHOLE EXCAVATION. WHEN CLAY PIPE IS USED, THE CRADLE SHALL EXTEND TO THE FIRST JOINT OUTSIDE THE MANHOLE. THE CRADLE SHALL BE TERMINATED AT THE CLAY PIPE JOINT IN A MANNER WHICH WILL MAINTAIN THE FLEXIBILITY OF THE JOINT. COST OF CRADLE WITHIN MANHOLE EXCAVATION OR TO CLAY PIPE JOINTS ADJACENT TO MANHOLE SHALL BE INCLUDED IN THE UNIT PRICE BID FOR THE MANHOLE.
15. MANHOLE COVER CASTINGS AND MANHOLE FRAME CASTINGS SHALL CONFORM TO THE REQUIREMENTS AS INDICATED IN THE STANDARD SPECIFICATIONS AND AS SHOWN IN THE STANDARD DETAIL DRAWING.
16. THE VERTICAL DROP IN INSIDE DROP MANHOLES SHALL NOT EXCEED 2' FOR INFLOWING PIPES SIZED 12" OR SMALLER AND 2' FOR INFLOWING PIPES LARGER THAN 12". THE CROWNS OF INFLOWING PIPES SHALL NEVER BE SET LOWER THAN THE CROWN OF THE OUTFLOWING PIPE.
17. STANDARD MANHOLES AND STANDARD INSIDE DROP MANHOLES SHALL BE BID AS STANDARD MANHOLES FOR THE TYPE AND DIAMETER INDICATED. OUTSIDE DROP MANHOLES SHALL BE BID AS STANDARD OUTSIDE DROP MANHOLES FOR THE TYPE AND DIAMETER INDICATED. ALL MANHOLE DIAMETERS WILL BE 4' UNLESS INDICATED OTHERWISE.
18. A BRICK MASONRY COLLAR SHALL BE INSTALLED BETWEEN THE CAST IRON FRAME AND THE CONCENTRIC CONE. THE COLLAR WILL HAVE 8" WALLS AND A VERTICAL HEIGHT OF 6" MINIMUM AND 18" MAXIMUM. A 1" COAT OF MORTAR WILL BE PLASTERED ON THE OUTSIDE OF THE COLLAR. THE USE OF PRE-CAST CONCRETE SPACERS FOR MANHOLE TOP ADJUSTMENT IS ALSO ALLOWED.

CADNR: BEE, KJW OPER: CSL SCALE: 1=1.00
Q:\2002\02693\002\PPSS\sdsmh 11-12-2003 11:15:59 am

THE CITY OF WICHITA
CITY ENGINEER'S OFFICE
(316) 268-4518 FAX

STANDARD TYPE 'P' MANHOLES

NEIL D. CABLE, P.E. - CITY ENGINEER

PROJECT NUMBER	GCA NO.
1391 PPS	(607861)
DATE: MAR 98	SHEET SU3.6 OF 14

MANHOLE FRAME AND COVER DETAIL

ADOPTED AS STANDARD DESIGN BY
CITY OF WICHITA, KANSAS

MANHOLE COVER
Weight = 180 Lbs.

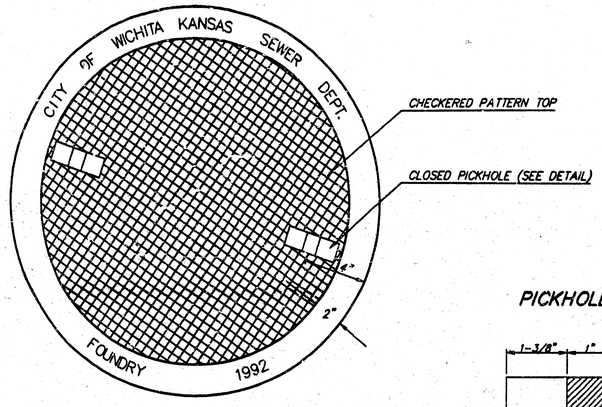

TOP VIEW

PICKHOLE DETAIL

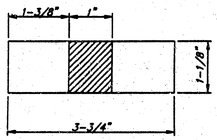

TOP VIEW

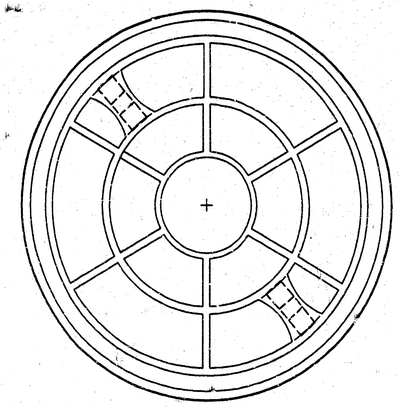

BOTTOM VIEW

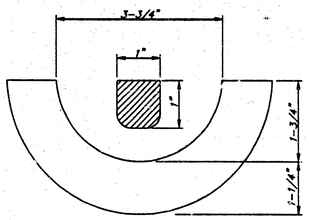

SECTION VIEW

MANHOLE FRAME
Weight = 240 Lbs.

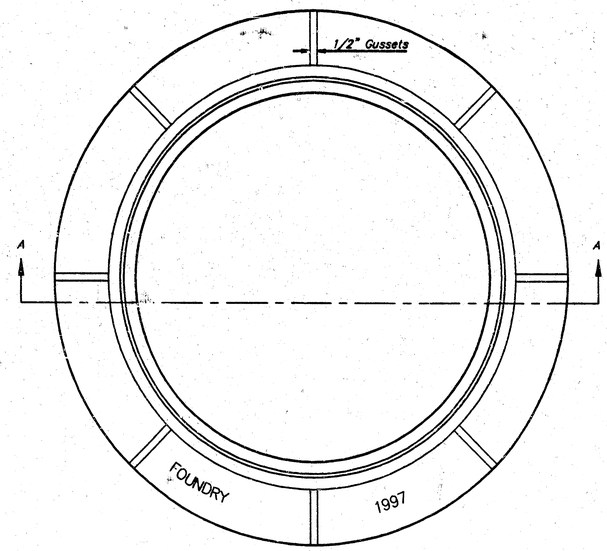

TOP VIEW

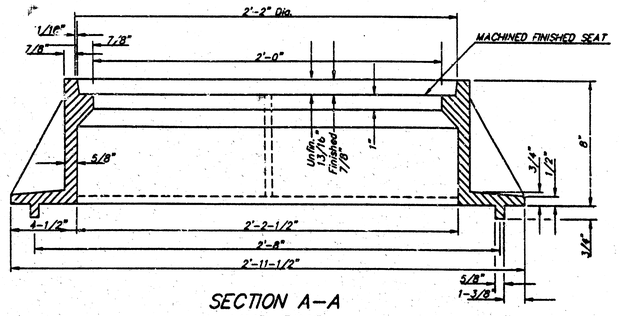

SECTION A-A
MUD RING

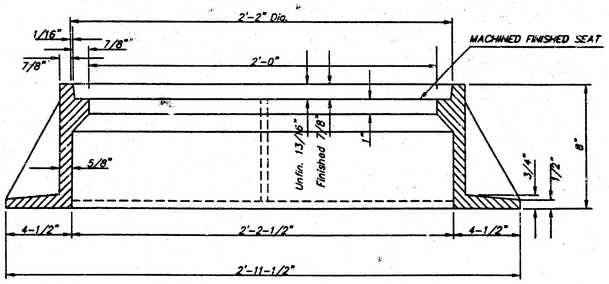

SECTION A-A

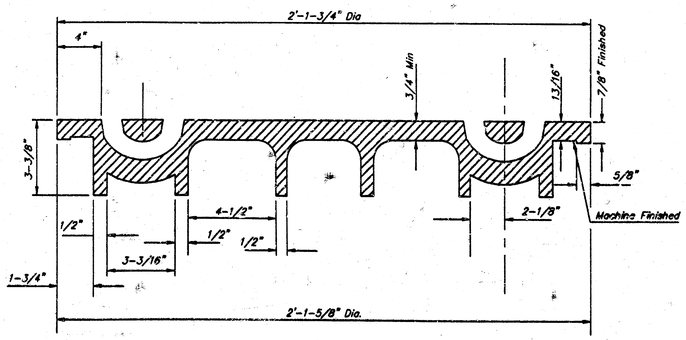

SECTION VIEW

GENERAL NOTES

1. MANHOLE CASTINGS SHALL BE MANUFACTURED USING GOOD QUALITY GRAY IRON CONFORMING TO CLASS 30 OF A.S.T.M. DESIGNATION A-48. DIMENSIONS AND WEIGHTS SHOWN ON THE DETAILED DRAWINGS SHALL BE CONSIDERED AS MINIMUM REQUIREMENTS AND ANY DEVIATIONS FROM THE DIMENSIONS SHOWN MUST BE SPECIFICALLY APPROVED. THE FINISHED CASTINGS SHALL BE OF UNIFORM QUALITY, FREE FROM BLOWHOLES, POROSITY, HARD SPOTS, SHRINKAGE DISTORTIONS OR OTHER DEFECTS.
2. MANHOLE CASTINGS SHALL WEIGH A MINIMUM OF 180 POUNDS ON THE SOLID COVER AND 240 POUNDS ON THE MANHOLE RING. THIS IS A TOTAL OF 420 POUNDS ON A RING AND COVER SET. CASTINGS WEIGHING LESS THAN THE MINIMUM SPECIFICATIONS WILL NOT BE ACCEPTED.
3. MANHOLE CASTINGS SHALL BE MANUFACTURED SUCH THAT A COVER MANUFACTURED BY ANY ONE FOUNDRY WILL FIT INTERCHANGEABLY INTO A FRAME MANUFACTURED BY ANOTHER FOUNDRY AND STILL MEET ALLOWABLE CLEARANCES AND NON-ROCKING REQUIREMENTS. THIS WILL REQUIRE MANUFACTURING OF THE MATCHING FACES ON THE COVER AND THE FRAME TO CLOSE TOLERANCES.
4. THE OUTSIDE CIRCUMFERENCE OF THE VERTICAL FACE OF THE COVER AND THE INSIDE CIRCUMFERENCE OF THE VERTICAL FACE IN THE FRAME RECESS SHALL BE MANUFACTURED TO TOLERANCES SUCH THAT THE CLEARANCE BETWEEN THE COVER AND FRAME WILL NOT EXCEED 1/8" AT ANY POINT AROUND THE CIRCUMFERENCE OF THE COVER. THE SEATING SURFACES BETWEEN THE COVER AND FRAME SHALL BE MACHINED SUCH THAT THESE SEATING SURFACES SHALL MAKE FULL CONTACT FOR THEIR FULL CIRCUMFERENCE TO PRECLUDE THE COVER FROM ROCKING IN THE FRAME.
5. THE MANHOLE FRAME AND COVER SHALL BE MARKED WITH LETTERING INDICATING THE NAME OF THE MANUFACTURER AND THE YEAR WHEN THE COVER OR FRAME WAS CAST. THE COVER SHALL BE FURTHER IDENTIFIED WITH REGARDS TO OWNERSHIP USING LETTERS AT LEAST 1 INCH IN HEIGHT. THIS IDENTIFICATION SHALL BE "CITY OF WICHITA SEWER DEPARTMENT". THE WORD DEPARTMENT MAY BE ABBREVIATED. THE TEXTURE OF THE TOP SURFACE OF THE COVER SHALL BE MANUFACTURED IN A CHECKERED PATTERN DESIGN AS INDICATED ON THE DRAWINGS. SMOOTH BLOCKOUTS SHALL BE UTILIZED TO HIGHLIGHT THE LETTERING ON THE COVER SURFACE. THE TOTAL AREA OF SMOOTH SURFACE BLOCKOUT SHALL NOT EXCEED THE AREA AS INDICATED ON THE DRAWING. POSITIONING OF SMOOTH BLOCKOUTS AND LETTERING MAY VARY FROM THAT SHOWN ON THE DETAILED DRAWING.

DGN: MER, UW OPER: CSL SCALE: 1=1.00
G:\2002\02693\002\PRSS\mhframcv 11-12-2003 11:16:32 am

THE CITY OF WICHITA
CITY ENGINEER'S OFFICE
CITY HALL - SEVENTH FLOOR
455 NORTH MAIN STREET
WICHITA, KANSAS 67202
(316) 268-4518 FAX

MANHOLE FRAME AND COVER

NEIL D. CABLE, P.E. - CITY ENGINEER

PROJECT NUMBER	OCA NO.
1391 PPS	(807361)
DATE: MAR 96	SHEET SU3.7 OF 14

EVERGREEN

AN ADDITION TO WICHITA, SEDGWICK COUNTY, KANSAS

Found 1/2" I.P. 0.18' West of Corner

N.W. Corner, S.E. 1/4 Sec. 6, T27S, R1W of the 6th P.M. Found 3/4" Iron Pipe

N.W. Corner, S. 1/2, N.E. 1/4 Sec. 6, T27S, R1W of the 6th P.M. Found #4 Rebar

GREENSPOINT

RUTGERS COURT

RUTGERS

STERLING

NEVILLE (Formerly STERLING)

CENTRAL PARK COURT

CENTRAL PARK

PARKDALE COURT

PARKDALE

RYAN CIRCLE

STONEY POINT COURT

STONEY POINT

RESERVE "A"

N.W. Corner Newmarket Square Add. Found 3/4" I.P.

SCALE: 1"=100'

● = IRON SET

B.M.: CITY OF WICHITA STD. BENCH MARK DISC 64' EAST AND 99' SOUTH OF THE INTERSECTION OF THE CENTERLINES MAIZE ROAD AND 21ST STREET NORTH.

ELEV.=1364.3 CITY DATUM
ELEV.=1351.7 M.S.L.

ESTABLISHED MINIMUM PAD (LOWEST OPENING) AS FOLLOWS:
LOTS 1 THROUGH 28, BLOCK 7, = 1365.6 CITY DATUM = 1353.0 M.S.L.

TARGET

REVIEWED BY:

Site Development Manager ____ / ____
___ Revise and Resubmit ___ Not Reviewed ___ Approved

Project Architect ____ / ____
___ Revise and Resubmit ___ Not Reviewed ___ Approved

Project Engineer (M) ____ / ____
___ Revise and Resubmit ___ Not Reviewed ___ Approved

Project Engineer (E) ____ / ____
___ Revise and Resubmit ___ Not Reviewed ___ Approved

Project Engineer (S) ____ / ____
___ Revise and Resubmit ___ Not Reviewed ___ Approved

Approval only for conformance of the site construction documents to Target Developer Guide, Edition 2.3 and the Target building documents. Consultant is solely responsible for completeness, accuracy, and dimensions on the site construction documents.

No.	Revision	By	Date

CITY OF WICHITA, KANSAS
NEIL D. CABLE, P.E., CITY ENGINEER
TARGET NORTHWEST

PLAT (WEST PORTION)

PRIVATE PROJECT NO. 1381 PPS (607861)

Professional Engineering Consultants, P.A.
303 S. TOPEKA • WICHITA, KANSAS 67202
316-262-2691 • FAX 316-262-3003

Designed by	RRY, KJW	Job No.	35-02693-2-5054
Drawn by		Date	AUGUST 2003

Sht. SU2.9 of 14

DSNR: OPER: CSL SCALE: 1=100.00
G:\2002\02693\002\PPSS\SSPlat1 11-12-2003 11:17:05 am

EVERGREEN

AN ADDITION TO WICHITA, SEDGWICK COUNTY, KANSAS

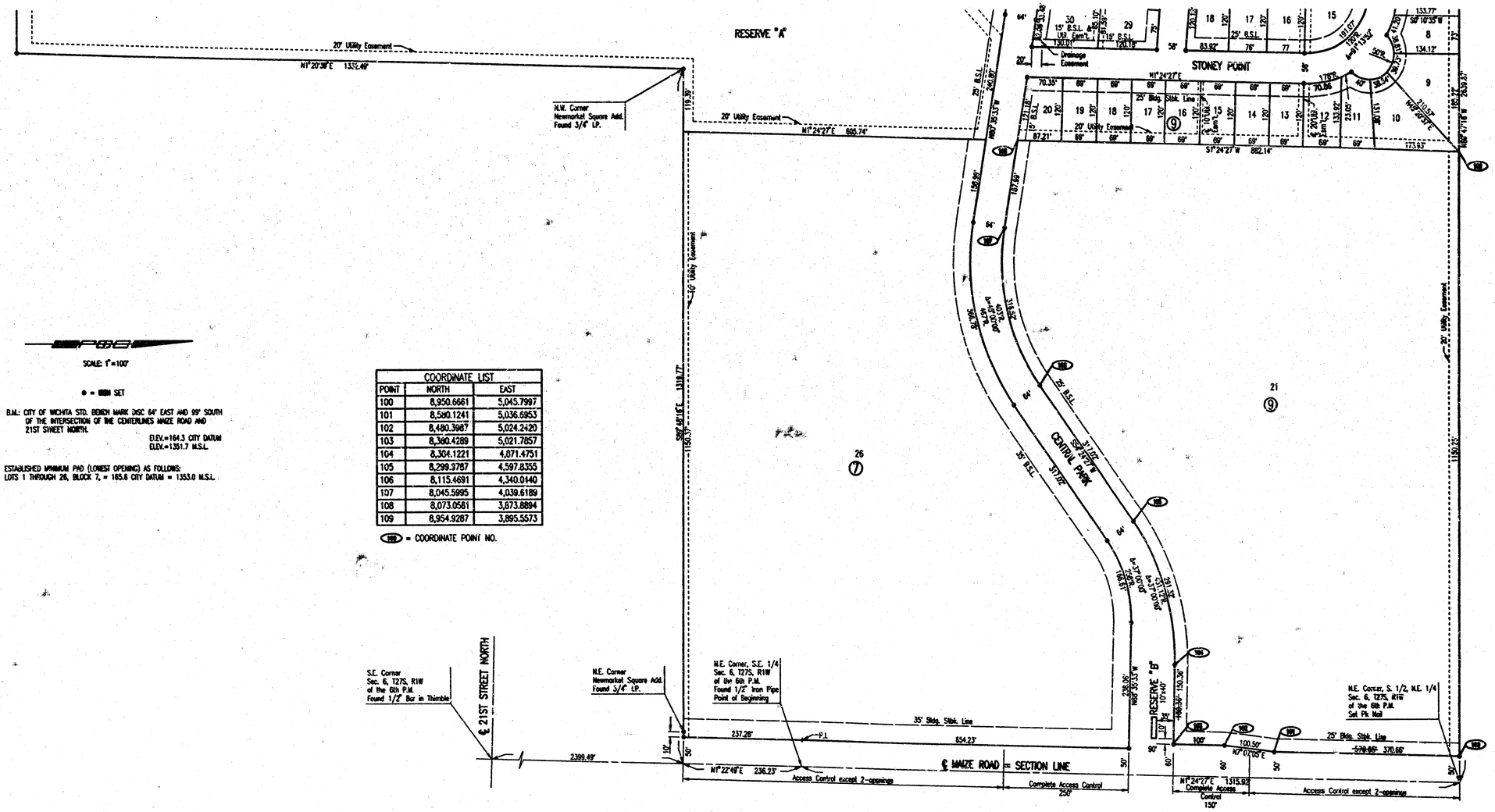

SCALE: 1"=100'

● = MON SET

B.M.: CITY OF WICHITA STD. BENCH MARK DISC 64' EAST AND 99' SOUTH OF THE INTERSECTION OF THE CENTERLINES MAIZE ROAD AND 21ST STREET NORTH.
ELEV.=1364.3 CITY DATUM
ELEV.=1351.7 M.S.L.

ESTABLISHED MINIMUM PAD (LOWEST OPENING) AS FOLLOWS:
LOTS 1 THROUGH 26, BLOCK 7, = 1353.6 CITY DATUM = 1353.0 M.S.L.

COORDINATE LIST		
POINT	NORTH	EAST
100	8,950.6661	5,045.7997
101	8,580.1241	5,036.6953
102	8,480.3987	5,024.2420
103	8,380.4289	5,021.7857
104	8,304.1221	4,671.4751
105	8,299.3787	4,597.8355
106	8,115.4691	4,340.0140
107	8,045.5995	4,039.6189
108	8,073.0581	3,873.8894
109	8,954.9287	3,895.5573

(100) = COORDINATE POINT NO.

TARGET

REVIEWED BY:

Site Development Manager ____ Revise and Resubmit ____ Not Reviewed ____ Approved ____/____
Project Architect ____ Revise and Resubmit ____ Not Reviewed ____ Approved ____/____
Project Engineer (M) ____ Revise and Resubmit ____ Not Reviewed ____ Approved ____/____
Project Engineer (E) ____ Revise and Resubmit ____ Not Reviewed ____ Approved ____/____
Project Engineer (S) ____ Revise and Resubmit ____ Not Reviewed ____ Approved ____/____

Approved only for conformance of the site construction documents to Target Developer Guide, Edition 2.2 and the Target building documents. Consultant is solely responsible for completeness, accuracy, and dimensions on the site construction documents.

No.	Revision	By	Date

CITY OF WICHITA, KANSAS
NEIL D. CABLE, P.E.- CITY ENGINEER
TARGET NORTHWEST

PLAT (EAST PORTION)

PRIVATE PROJECT NO. 1391 PPS (607861)

Professional Engineering Consultants, P.A.
303 S. TOPEKA • WICHITA, KANSAS 67202
316-262-2691 • FAX 316-262-8252

Designed by RRY, KJW | Job No. 35-02693-2-5054
Drawn by | Date AUGUST 2003 | Sht. SU2.10 of 14

DSNR: OPER: CSL SCALE: 1=100.00
Q:\2002\02693\002\PPS\TSSPlat2 11-12-2003 11:25:19 am

LOT SPLIT
LOT 21, BLOCK 9, EVERGREEN

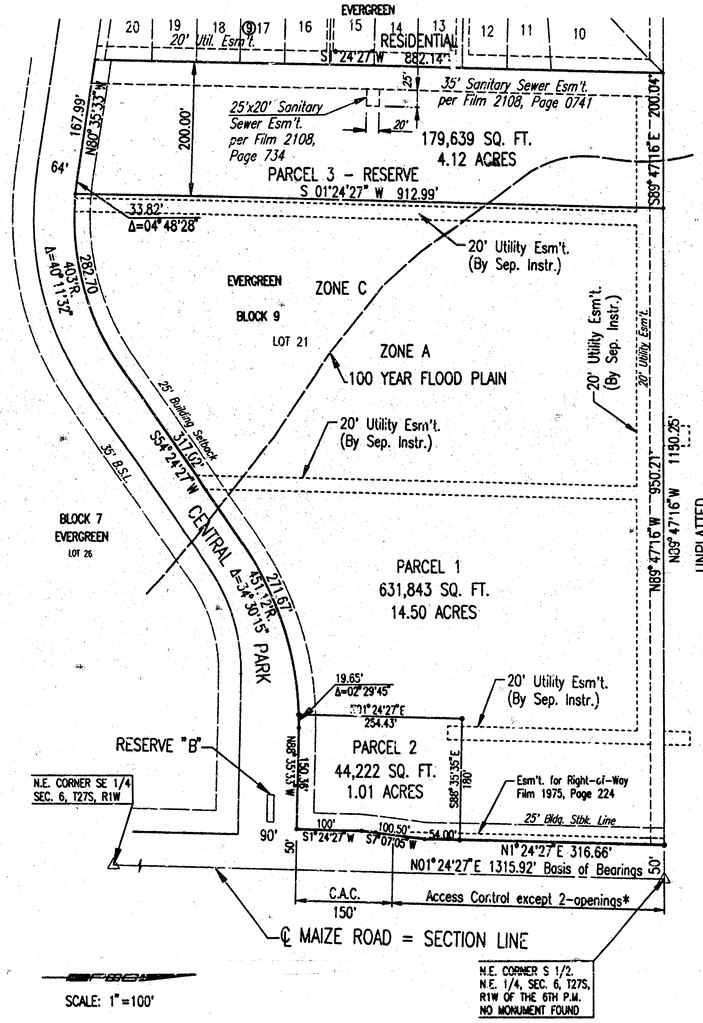

TARGET

REVIEWED BY:

Site Development Manager ___ Revise and Resubmit ___ Not Reviewed ___ Approved ___/___/___

Project Architect ___ Revise and Resubmit ___ Not Reviewed ___ Approved ___/___/___

Project Engineer (M) ___ Revise and Resubmit ___ Not Reviewed ___ Approved ___/___/___

Project Engineer (E) ___ Revise and Resubmit ___ Not Reviewed ___ Approved ___/___/___

Project Engineer (S) ___ Revise and Resubmit ___ Not Reviewed ___ Approved ___/___/___

Approved only for conformance of the site construction documents to Target Developer Guide, Edition 2.3 and the Target building documents. Consultant is solely responsible for completeness, accuracy, and dimensions on the site construction documents.

No.	Revision	By	Date

CITY OF WICHITA, KANSAS
NEIL D. CABLE, P.E.- CITY ENGINEER
TARGET NORTHWEST

LOT SPLIT

PRIVATE PROJECT NO. 1391 PPS (627861)

Professional Engineering Consultants, P.A.
303 S. TOPEKA • WICHITA, KANSAS 67202
316-262-2691 • FAX 316-262-3003

Designed by RRY, KJW | Job No. 35-02683-2-5054 | Sht. SU2.11 of 14
Drawn by | Date AUGUST 2003

DSNR: OPER: CSL SCALE: 1=100.00
O:\2002\02683\0002\PPSS\SS_LotSplit 11-12-2003 11:25:41 am

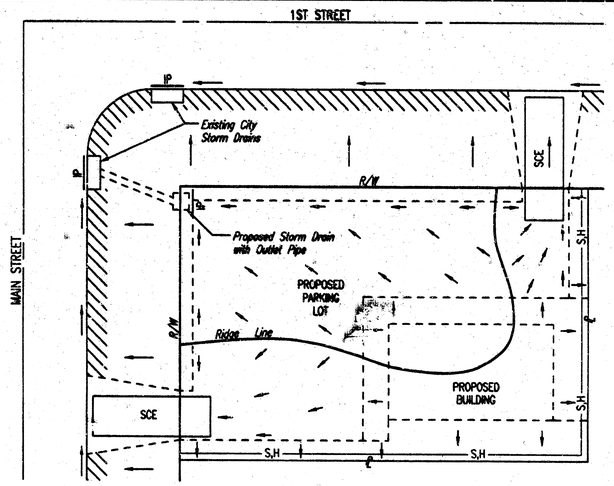

General Notes

1. This standard detail sheet is a part of your building permit. The BMP's shown on this sheet are considered minimum standards. Whenever sediment enters the streets, storm sewers, ditches, or ponds, contractor will install additional BMP's, as needed, to correct the problem.
2. Follow these general principals on all commercial building sites.
3. The soil erosion BMP's shown hereon must be in place at all times during construction until such time as the site is re-established with paving or grass.
4. Failure to install, protect, and maintain BMP's are violations of Section 16.32 of the City Code and will subject the contractor to the penalties provided therein. Included with your permit is an orange "notice" sign that must be posted on-site in a conspicuous place at all times during construction. This sign is provided to assist you in the maintenance of BMP'S.
5. Back of Curb Protection: Can include hay bale, silt fence, or Curlex barrier, as shown on City BMP standard details. This BMP must remain in place until the area between the curb and right-of-way line has been permanently stabilized.
6. The General Contractor is responsible for the installation and maintenance of all BMP's.
7. Should the site abut a lake, BMP's will be installed to prevent sediment from entering the lake.
8. Any mud inadvertently tracked onto any street will be cleaned up by the general contractor at the end of each day's work.

CITY OF WICHITA

SOIL EROSION BMPS COMMERCIAL DEVELOPMENT SITES

CHRISTOPHER M. CARRIER, P.E.
STORM WATER ENGINEER

TARGET

REVIEWED BY:

Site Development Manager ____/____
___ Revise and Resubmit ___ Not Reviewed ___ Approved

Project Architect ____/____
___ Revise and Resubmit ___ Not Reviewed ___ Approved

Project Engineer (M) ____/____
___ Revise and Resubmit ___ Not Reviewed ___ Approved

Project Engineer (E) ____/____
___ Revise and Resubmit ___ Not Reviewed ___ Approved

Project Engineer (S) ____/____
___ Revise and Resubmit ___ Not Reviewed ___ Approved

Approved only for conformance of the site construction documents to Target Developer Guide, Edition 2.5 and the Target building documents. Consultant is solely responsible for completeness, accuracy, and dimensions on the site construction documents.

No.	Revision	By	Date

CITY OF WICHITA, KANSAS
NEIL D. CABLE, P.E.- CITY ENGINEER
TARGET NORTHWEST

SOIL EROSION BMPS COMMERCIAL DEVELOPMENT SITES

PRIVATE PROJECT NO. 1391 PPS (807861)

Professional Engineering Consultants, P.A.
303 S. TOPEKA • WICHITA, KANSAS 67202
316-262-2691 • FAX 316-262-3003

Designed by RRY, KJW | Job No. 35-02693-2-5054
Drawn by | Date AUGUST 2003
Sht. SG2.1 of 14

DSNR: BER, KJW OPER: CSL SCALE: 1=1.00
G:\2002\02693.002\PPSS\SEMP_PC_COMMERCIAL 11-12-2003 11:26:04 am

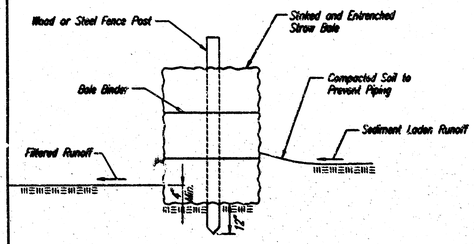

STRAW BALE BARRIERS

Material Specification:

Bale slope barriers may be constructed of wheat straw, oat straw, prairie hay, or bromegrass hay that is free of weeds declared noxious by the Kansas State Board of Agriculture.
The stakes used to anchor the bales should be a hardwood material with the following minimum dimensions: 2" square (nominal) by 4' long.

Placement:

A slope barrier should be used at the toe of a slope when a ditch does not exist. The slope barrier should be placed on nearly level ground 5' to 10' away from the toe of a slope. The barrier is placed away from the toe of the slope to provide adequate storage for settling out sediment.
When practicable, bale slope barriers should be placed along contours to avoid a concentration of flow.
Bale slope barriers can also be placed along right-of-way fence lines to keep sediment from crossing onto adjacent property. When placed in this manner, the slope barrier will not likely follow contours.

Proper installation method:

Excavate a trench the length of the planned slope barrier that is 4" deep and a bale's width wide. Make sure that the trench is excavated along a single contour. When practicable, slope barriers should be placed along contours to avoid a concentration of flow. Place the soil on the upslope side of the trench for later use.
Place the bales in the trench, making sure that they are butted tightly. Two stakes should be driven through each bale along the centerline of the ditch check, approximately 6" to 8" in from the bale ends. Stakes should be driven at least 12" into the ground.
Once all the bales have been installed and anchored, place the excavated soil against the upslope side of the check and compact it. The compacted soil should be no more than 3" to 4" deep.

List of common placement/installation mistakes to avoid:

When practical, do not place bale slope barriers across contours. Slope barriers should be placed along contours to avoid a concentration of flow. Concentrated flow over a slope barrier creates a scour hole on the downslope side of the barrier. The scour hole eventually undermines the bales and the barrier fails.
Do not place bale slope barriers in areas with shallow soils underlain by rock. If the barrier is not anchored sufficiently, it will wash out.
Bale slope barriers must be dug into the ground. Bales at ground level do not work because they allow water to flow under the barrier.

Inspection and Maintenance:

Bale slope barriers should be inspected every 7 days and within 24 hours of a rainfall of 1/2" or more. The following is a list of questions that should be addressed during each inspection:

Are there any points along the slope barrier where water is concentrating?
Does water flow under the slope barrier?
Does water flow through spaces between abutting bales?
Are any bales dislodged?
Are bales decomposing due to age and/or water damage?
Does sediment need to be removed from behind the slope barrier?

NOTE: Point A must be higher than Point B so that water flows over the bales and not around them.

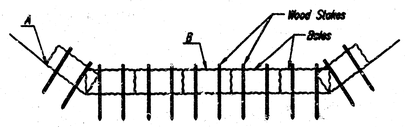

STRAW BALE DITCH CHECKS

Material Specification:

Bale ditch checks may be constructed of wheat straw, oat straw, prairie hay, or bromegrass hay that is free of weeds declared noxious by the Kansas State Board of Agriculture.
The stakes used to anchor the bales should be a hardwood material with the following minimum dimensions: 2" square (nominal) by 4' long.
Optional: The downstream scour apron should be constructed of a double-netted straw erosion-control blanket at least 6' wide.
Optional: The metal landscape staples used to anchor the erosion-control blanket should be at least 8" long.

Placement:

Bale ditch checks should be placed perpendicular to the flowline of the ditch.
The ditch check should extend far enough so that the ground level at the ends of the check is higher than the top of the lowest center bale. This prevents water from flowing around the check.
Checks should not be placed in ditches where high flows are expected. Rock checks should be used instead.
Bales should be placed in ditches with slopes of 6% or less. For slopes steeper than 6%, rock checks should be used.
The following table provides check spacing for a given ditch grade:

Ditch grade (%)	Check Spacing (feet)
0.5	200
1.0	200
2.0	100
3.0	65
4.0	50
5.0	40
6.0	30

Proper installation method:

Excavate a trench perpendicular to the ditch flowline that is 4" deep and a bale's width wide. Extend the trench in a straight line along the entire length of the proposed ditch check. Place the soil on the upstream side of the trench-it will be used later.
Optional: On the downstream side of the trench, roll out a length of erosion-control blanket (scour apron) equal to the length of the trench. Place the upstream edge of the erosion-control blanket along the bottom upstream edge of the trench. The erosion control blanket should be anchored in the trench with one row of 8" landscape staples placed on 18" centers. The remainder of the erosion-control blanket (the portion that is not lying in the trench) will serve as the downstream scour apron. This section of the blanket should be anchored to the ground with 8" landscape staples placed around the perimeter of the blanket on 18" centers. The remainder of the blanket should be anchored using two evenly spaced rows of 8" landscape staples on 18" centers placed perpendicular to the flowline of the ditch.
Place the bales in the trench, making sure that they are butted tightly. Two stakes should be driven through each bale along the centerline of the ditch check, approximately 6" to 8" in from the bale ends. Stakes should be driven at least 12" into the ground.
Once all the bales have been installed and anchored, place the excavated soil against the upstream side of the check and compact it. The compacted soil should be no more than 3" to 4" deep and extend upstream no more than 24".

List of common placement/installation mistakes to avoid:

Do not place a bale ditch check directly in front of a culvert outlet. It will not stand up to the concentrated flow.
Do not place bale ditch checks in ditches that will likely experience high flows. They will not stand up to concentrated flow.
Follow prescribed ditch-check spacing guidelines. If spacing guidelines are exceeded, erosion will occur between the ditch checks.
Do not allow water to flow around the ditch check. Make sure that the ditch check is long enough so that the ground level at the ends of the check is higher than the top of the lowest center bale.
Do not place bale ditch checks in channels with shallow soils underlain by rock. If the check is not anchored sufficiently, it will wash out.
Bale ditch checks must be dug into the ground. Bales at ground level do not work because they allow water to flow under the check.

Inspection and Maintenance:

Bale ditch checks should be inspected every 7 days and within 24 hours of a rainfall of 1/2" or more. The following is a list of questions that should be addressed during each inspection:

Does water flow around the ditch check?
Does water flow under the ditch check?
Does water flow through spaces between abutting bales?
Are any bales and/or scour aprons (optional) dislodged?
Are bales decomposing due to age and/or water damage?
Does sediment need to be removed from behind the ditch check?

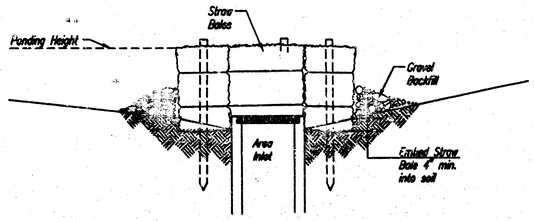

SECTION A-A

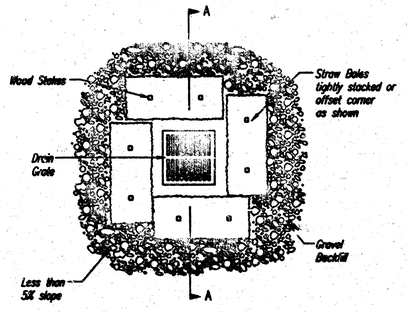

STRAW BALE BARRIERS FOR AREA INLETS
(INLET PROTECTION)

Material Specification:

Bale area inlet barriers should be constructed of wheat straw, oat straw, prairie hay, or bromegrass hay that is free of weeds declared noxious by the Kansas State Board of Agriculture.
The stakes used to anchor the bales should be a hardwood material with the following minimum dimensions: 2" square (nominal) by 4' long.

Placement:

Bale area inlet barriers should be placed directly around the perimeter of a drop inlet. When a bale area inlet barrier is located near an inlet that has steep approach slopes, the storage capacity behind the barrier is drastically reduced. Timely removal of sediment must occur for a barrier to operate properly in this location.

Proper installation Method:

Excavate a trench around the perimeter of the area inlet that is at least 4" deep by a bale's width wide.
Place the bales in the trench, making sure that they are butted tightly. Some bales may need to be shortened to fit into the trench around the area inlet. Two stakes should be driven through each bale, approximately 6" to 8" in from the bale ends.
Stakes should be driven at least 12" into the ground.
Once all the bales have been installed and anchored, place the excavated soil against the receiving side of the barrier and compact it. The compacted soil should be no more than 3" to 4" deep.
Note: When a bale area inlet barrier is placed in a shallow median ditch, make sure that the top of the barrier is not higher than the paved road. In this configuration, water may spread onto the roadway causing a hazardous condition.

List of common placement installation mistakes to avoid:

Bales should be placed directly against the perimeter of the area inlet. This allows overlapping water to flow directly into the inlet instead of onto nearby soil causing scour.
Bale area inlet barriers must be dug into the ground. Bales at ground level do not work because they allow water to flow under the barrier.

Inspection and Maintenance:

Bale area inlet barriers should be inspected every 7 days and within 24 hours of a rainfall 1/2" or more. The following is a list of questions that should be addressed during each inspection:

Does water flow under the area inlet barrier?
Does water flow through spaces between abutting bales?
Are any bales dislodged?
Are bales decomposing due to age and/or water damage?
Does sediment need to be removed from behind the area inlet barrier?

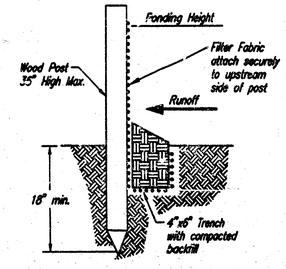

SILT FENCE BARRIERS

SILT FENCE BARRIERS

Material Specification:

Silt fence fabric should conform to the AASHTO M288 96 silt fence specification.
The posts used to support the silt fence fabric should be a hardwood material with the following minimum dimensions: 2" square (nominal) by 4' long.
Silt fence fabric should be attached to the wooden posts with staples, wire, zip ties, or nails.

Placement:

A slope barrier should be used at the toe of a slope when a ditch does not exist. The slope barrier should be placed on nearly level ground 5' to 10' away from the toe of a slope. The barrier is placed away from the toe of the slope to provide adequate storage for settling out sediment.
When practicable, silt fence slope barriers should be placed along contours to avoid a concentration of flow.
Silt fence slope barriers can also be placed along right-of-way fence lines to keep sediment from crossing onto adjacent property. When placed in this manner, the slope barrier will not likely follow contours.

Proper installation method:

Excavate a trench the length of the planned slope barrier that is 6" deep by 4" wide. Make sure that the trench is excavated along a single contour. When practicable, slope barriers should be placed along contours to avoid a concentration of flow. Place the soil on the upslope side of the trench for later use.
Roll out a continuous length of silt fence fabric on the downslope side of the trench. Place the edge of the fabric in the trench starting at the top upslope edge. Line all three sides of the trench with the fabric. Backfill over the fabric in the trench with the excavated soil and compact. After filling the trench, approximately 24" to 36" of silt-fence fabric should remain exposed.
Lay the exposed silt fence upslope of the trench to clear an area for driving in the posts. Just downslope of the trench, drive posts into the ground to a depth of at least 18". Place posts no more than 4' apart.
Attach the silt fence to the anchored post with staples, wire, zip ties, or nails.

List of common placement/installation mistakes to avoid:

When practicable, do not place silt fence slope barriers across contours. Slope barriers should be placed along contours to avoid a concentration of flow. When the flow concentrates, it overtops the barrier and the silt fence slope barrier quickly deteriorates.
Do not place silt-fence posts on the upslope side of the silt fence fabric. In this configuration, the force of the water is not restricted by the posts, but only by the staples (wire, zip ties, nails, etc.). The silt fence will rip and fail.
Do not place silt fence slope barriers in areas with shallow soils underlain by rock. If the barrier is not sufficiently anchored, it will wash out.
Silt fence slope barriers must be dug into the ground-silt fence at ground level does not work because water will flow underneath.

Inspection and Maintenance:

Silt fence slope barriers should be inspected every 7 days and within 24 hours of a rainfall of 1/2" or more. The following is a list of questions that should be addressed during each inspection:

Are there any points along the slope barrier where water is concentrating?
Does water flow under the slope barrier?
Do the silt fences sag excessively?
Has the silt fence torn or become detached from the posts?
Does sediment need to be removed from behind the slope barrier?

TARGET

REVIEWED BY:

Site Development Manager ___ Review and Resubmit ___ Not Reviewed ___ Approved
Project Architect ___ Review and Resubmit ___ Not Reviewed ___ Approved
Project Engineer (SA) ___ Review and Resubmit ___ Not Reviewed ___ Approved
Project Engineer (E) ___ Review and Resubmit ___ Not Reviewed ___ Approved
Project Engineer (S) ___ Review and Resubmit ___ Not Reviewed ___ Approved

Approval only for conformance of the site construction documents to Target Developer Guide, Edition 2.3 and the Target building documents. Consultant is solely responsible for completeness, accuracy, and dimensions on the site construction documents.

CITY OF WICHITA

SOIL EROSION BMP DETAILS

CHRISTOPHER M. CARRIER, P.E.
STORM WATER ENGINEER

PROJECT NUMBER: 1301 PPS
OCA NO.: (607861)
DATE: MAY 2001
SHEET SG2.2 OF 14

DSNR: BER, KJW OPER: KSL SCALE: 1=1.00
Q:\2002\02693\002\PWS\SEBMP_PEC_DTLS1-R14 11-12-2003 11:26:26 am

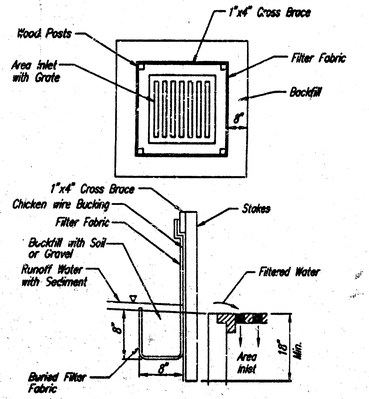

SILT FENCE BARRIERS FOR AREA INLETS
(INLET PROTECTION)

Material Specification:

Silt rence fabric should conform to the AASHTO M288 96 silt fence specification.
The wire or polymeric mesh backing used to help support the silt fence fabric should conform to the AASHTO M288 96 silt fence specification.
The posts used to support the silt fence fabric should be a hardwood material with the following minimum dimensions: 2" square (nominal) by 4' long.
The material used to frame the tops of the posts should be 1" by 4" boards.
Silt fence fabric and support backing should be attached to the wooden posts and frame with staples, wire, zip ties, or nails.

Placement:

Place a silt fence drop inlet barrier in a location where it is unlikely to be overtopped.
Water should flow through silt fence, not over it. Silt fence barriers for area inlets often fail when repeatedly overtopped.
When used as a barrier for area inlets, silt fence fabric and posts must be supported at the top by a wooden frame.
When a silt fence barrier for area inlets is located near an inlet that has steep approach slopes, the storage capacity behind the barrier is drastically reduced. Timely removal of sediment must occur for a barrier to operate properly in this location.

Proper installation method:

Excavate a trench around the perimeter of the area inlet that is at least 8" deep by 8" wide.
Drive posts to a depth of at least 18" around the perimeter of the area inlet.
The distance between posts should be 4' or less. If the distance between two adjacent corner posts is more than 4', add another post(s) between them.
Connect the tops of all the posts with a wooden frame made of 1" by 4" boards. Use nails or screws for fastening.
Attach the wire or polymeric-mesh backing to the outside of the post/frame structure with staples, wire, zip ties, or nails.
Roll out a continuous length of silt fence fabric long enough to wrap around the perimeter of the area inlet. Add more length for overlapping the fabric joint. Place the edge of the fabric in the trench, starting at the outside edge of the trench. Line all three sides of the trench with the fabric. Backfill over the fabric in the trench with the excavated soil and compact. After filling the trench, approximately 24" to 36" of silt fence fabric should remain exposed.
Attach the silt fence to the outside of the post/frame structure with staples, wire, zip ties, or nails. The joint should be overlapped to the next post.

Note: When a silt fence barrier for area inlet is placed in a shallow median ditch, make sure that the top of the barrier is not higher than the paved road. In this configuration, water may spread onto the roadway causing a hazardous condition.

List of common placement/installation mistakes to avoid:

Water should flow through a silt fence barrier for area inlet-not over it. Place a silt fence barrier for area inlet in a location where it is unlikely to be overtopped. Silt fence barrier for area inlets often fail when repeatedly overtopped.
Do not place posts on the outside of the silt fence barrier for area inlet. In this configuration, the force of the water is not resisted by the posts, but only by the staples (wire, zip ties, nails, etc.). The silt fence will rip and fail.
Do not install silt fence barrier for area inlets without framing the top of the posts.
The corner posts around area inlets are stressed in two directions whereas a normal silt fence is only stressed in one direction. This added stress requires more support.

Inspection and Maintenance:

Silt fence barrier for area inlets should be inspected every 7 days and within 24 hours of a rainfall of 1/2" or more. The following is a list of questions that should be addressed during each inspection:

Does water flow under the silt fence?
Does the silt fence sag excessively?
Has the silt fence torn or become detached from the posts?
Does sediment need to be removed from behind the area inlet barrier?

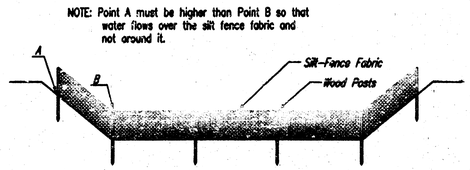

ELEVATION

SILT FENCE DITCH CHECKS
(STREAM PROTECTION)

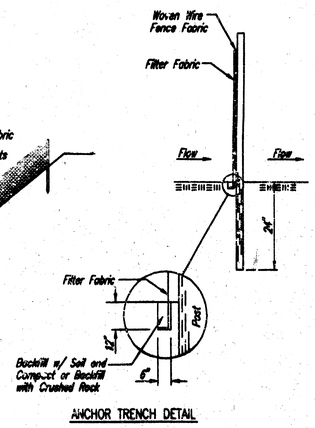

ANCHOR TRENCH DETAIL

Material Specification:

Silt fence fabric should conform to the AASHTO M288 96 silt fence specification.
The posts used to support the silt fence fabric should be a hardwood material with the following minimum dimensions: 2" square (nominal) by 4' long.
Silt fence fabric should be attached to the wooden posts with staples, wire, zip ties, or nails.

Placement:

Place silt fence in ditches where it is unlikely that it will be overtopped.
Water should flow through a silt fence ditch check, not over it. Silt fence ditch checks often fail when overtopped.
Silt fence ditch checks should be placed perpendicular to the flowline of the ditch.
The silt fence should extend far enough so that the ground level at the ends of the fence is higher than the top of the low point of the fence. This prevents water from flowing around the check.
Checks should not be placed in ditches where high flows are expected. Rock checks should be used instead.
Silt fence should be placed in ditches with slopes of 6% or less. For slopes steeper than 5%, rock checks should be used.

The following table provides check spacing for a given ditch grade:

Ditch grade (%)	Check Spacing (feet)
0.5	200
1.0	200
2.0	100
3.0	65
4.0	50
5.0	40
6.0	30

Proper installation method:

Excavate a trench perpendicular to the ditch flowline that is at least 12" deep by 6" wide.
Extend the trench in a straight line along the entire length of the proposed ditch check.
Place the soil on the upstream side of the trench for later use.
Roll out a continuous length of silt fence fabric on the downstream side of the trench.
Place the edge of the fabric in the trench starting at the top upstream edge of the trench.
Line two sides of the trench with the fabric as shown on detail. Backfill over the fabric in the trench with the excavated soil and compact. After filling the trench, approximately 24" to 36" of silt fence fabric should remain exposed.
Lay the exposed silt fence on the upstream side of the trench to clear an area for driving in the posts. Just downstream of the trench, drive posts into the ground to a depth of at least 24". Place posts no more than 4' apart.
Attach the silt fence to the anchored post with staples, wire, zip ties, or nails.

List of common placement/installation mistakes to avoid:

Water should flow through a silt fence ditch check-not over it. Place silt fence in ditches where it is unlikely that it will be overtopped. Silt fence installations quickly deteriorate when water overtops them.
Do not place silt fence posts on the upstream side of the silt fence fabric. In this configuration, the force of the water is not restricted by the posts, but only by the staples (wire, zip ties, nails, etc.). The silt fence will rip and fail.
Do not place a silt fence ditch check directly in front of a culvert outlet. It will not stand up to the concentrated flow.
Do not place silt fence ditch checks in ditches that will likely experience high flows. They will not stand up to concentrated flow.
Follow prescribed ditch check spacing guidelines. If spacing guidelines are exceeded, erosion will occur between the ditch checks.
Do not allow water to flow around the ditch check. Make sure that the ditch check is long enough so that the ground level at the ends of the fence is higher than the low point on the top of the fence.
Do not place silt fence ditch checks in channels with shallow soils underlain by rock. If the check is not anchored sufficiently, it will wash out.

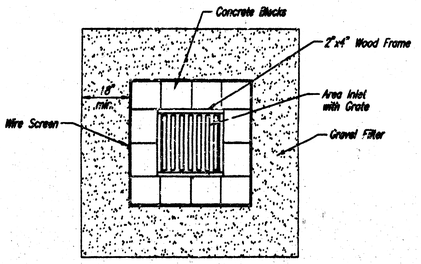

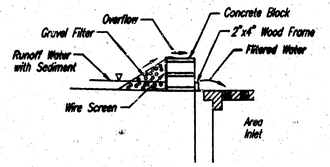

CONCRETE BLOCK FILTER FOR AREA DRAIN
(INLET PROTECTION)

Gravel barriers provide little filtering of large inflow waters. However, when installed correctly and maintained, they can effectively treat low runoff flows.

Placement of gravel filters around area drains must be completed in a manner that will not cause local flooding.

Gravel filters can be used if the immediate and adjacent area to the area drain consists of soil or pavement.

Only gravel filters are to be installed on top of the pavement.

Instructions for installing:

STEP 1: Place concrete blocks around the grate. The blocks can be stacked one or two high and should be supported by a 2"x4" board.
STEP 2: Wrap 1/2" mesh wire screen around the concrete blocks.
STEP 3: Place 1" to 1-1/2" diameter rock around the blocks and wire screen. Be sure the rock extends down from the top of the concrete block.
STEP 4: To prevent damage to vehicles, signs warning drivers about the structures may be necessary.

An alternative method is use of gravel bags that are supported to prevent collapsing.

Use of rock having diameters smaller than 1" may result in clogging of pores and reduce the amount of water flowing into an inlet.

Maintenance:

All gravel filters installed around area drains should be inspected and repaired after each runoff event. Sediment should be removed when material is within 3" of the top of any block. Periodically, the gravel should be raked to increase infiltration and filtering of runoff waters. Accumulated sediment is to be removed immediately from roads and streets after every runoff event.

Inspection and Maintenance:

Silt fence ditch checks should be inspected every 7 days and within 24 hours of a rainfall of 1/2" or more. The following is a list of questions that should be addressed during each inspection:

Does water flow around the ditch check?
Does water flow under the ditch check?
Does the silt fence sag excessively?
Has the silt fence torn or become detached from the posts?
Does sediment need to be removed from behind the ditch check?

TARGET

REVIEWED BY:

Site Development Manager ____ / ____
___ Revise and Resubmit ___ Not Reviewed ___ Approved

Project Architect ____ / ____
___ Revise and Resubmit ___ Not Reviewed ___ Approved

Project Engineer (M) ____ / ____
___ Revise and Resubmit ___ Not Reviewed ___ Approved

Project Engineer (E) ____ / ____
___ Revise and Resubmit ___ Not Reviewed ___ Approved

Project Engineer (S) ____ / ____
___ Revise and Resubmit ___ Not Reviewed ___ Approved

Approved only for conformance of the site construction documents to Target Developer Guide, Edition 2.3 and the Target building documents. Consultant is solely responsible for completeness, accuracy, and dimensions on the site construction documents.

CITY OF WICHITA

SOIL EROSION BMP DETAILS

CHRISTOPHER M. CARRIER, P.E.
STORM WATER ENGINEER

PROJECT MANAGER: 1381 PPS
CCA NO.: (607861)
DATE: MAY 2001
SHEET SG2.3 OF 14

DSNR: BCR, MJW OPER: CSL SCALE: 1=1.00
Q:\2002\02693.002\PPSS\SCBMP_PEC_DTLS2-R14 11-12-2003 11:26:47 am

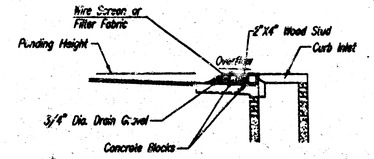

SECTION A-A

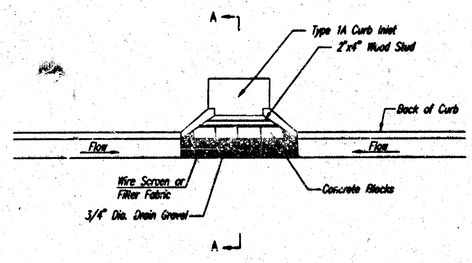

CURB INLET GRAVEL FILTERS
(INLET PROTECTION-RESIDENTIAL STREETS ONLY)

NOTE: Other types of curb inlet protection may be approved by the city so long as equal protection is provided.

A gravel inlet filter shall be installed at sump locations on residential streets. This type of protection is not to be used on arterial or collector streets at any time that it would pose an undue traffic hazard.

Instructions for Installing:

STEP 1: Place concrete blocks around the inlet as shown on drawing. Insert 2x4 board as shown.
STEP 2: Wrap 1/2" mesh wire screen around the concrete blocks.
STEP 3: Place 1" to 1-1/2" diameter rock around the blocks and wire screen. Be sure the rock extends down from the top of the concrete block.
STEP 4: To prevent damage to vehicles, signs warning drivers about the structures may be necessary. An alternative installation is the use of gravel bags supported by a 2"x4" board to prevent collapsing.

Use of rock with diameters smaller than 1" in the box may result in clogging of pores and reduce the amount of water flowing into an inlet.

Maintenance:

All curb inlet gravel filters shall be inspected and repaired after each runoff event. Sediment deposits are to be removed once material is within 8 cm (3 inches) of the top of any block. Periodically, the gravel shall be raised to increase infiltration and filtering of runoff waters. Accumulated sediment is to be removed immediately from roads and streets.

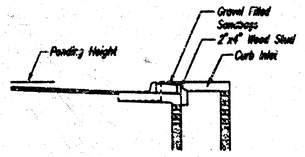

SECTION B-B

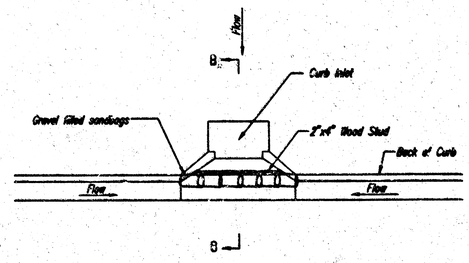

CURB INLET SANDBAG FILTERS
(INLET PROTECTION)

NOTE: Other types of curb inlet protection may be approved by the City so long as equal protection is provided.

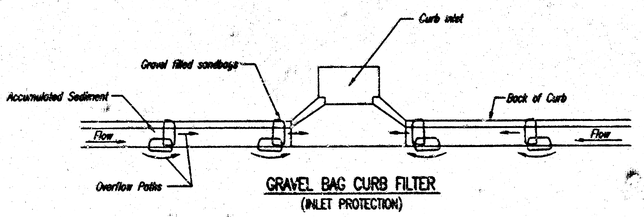

GRAVEL BAG CURB FILTER
(INLET PROTECTION)

NOTE: Place two or more sets of bags in a manner that results in maximum support. The flow line bag must be lower than top of curb.

CURB SEDIMENT TRAPS

When inlets are located on streets having a grade (i.e., sump conditions do not exist), installing gravel (or sand) bags in the gutter flow line to create small sediment traps can be considered. Gravel bags are recommended over sand bags to allow for drainage.

If the spacing between bags becomes too large, little sediment may be trapped. Spacing of bags should be completed using the table or graph that illustrates placement distances based upon street slope. When installed in the gutter, bag tops must be lower than the sidewalk.

Spacing:

Gravel bags are to be placed according to street grades using the following table or graph that appears below.

GRADE (%)	SPACING (FEET)
0.5	75
1.0	45
2.0	18
3.0	12
4.0	9
5.0	6

Maintenance:

Collected sediment shall be removed after every runoff event. Bags that are destroyed by vehicular traffic or through natural deterioration are to be immediately replaced.

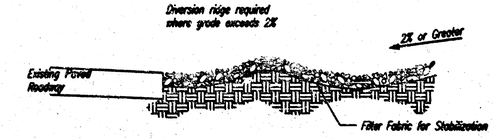

SECTION C-C

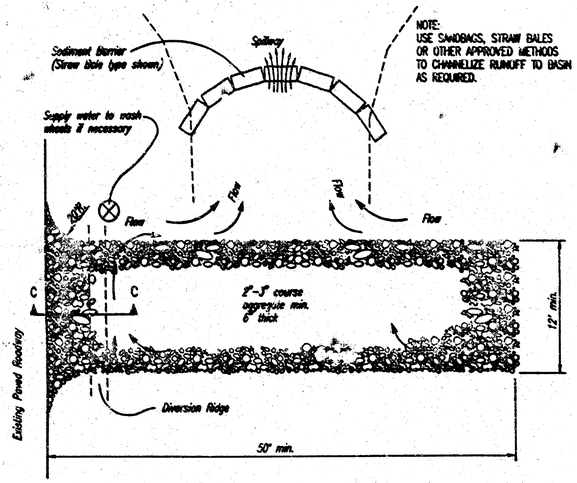

STABILIZED CONSTRUCTION ENTRANCE

NOTES:

1. THE ENTRANCE SHALL BE MAINTAINED IN A CONDITION THAT WILL PREVENT TRACKING OR FLOWING OF SEDIMENT ONTO PUBLIC RIGHTS-OF-WAY. THIS MAY REQUIRE TOP DRESSING, REPAIR AND/OR CLEANOUT OF ANY MEASURES USED TO TRAP SEDIMENT.
2. WHEN NECESSARY, WHEELS SHALL BE CLEANED PRIOR TO ENTRANCE ONTO PUBLIC RIGHT-OF-WAY.
3. WHEN WASHING IS REQUIRED, IT SHALL BE DONE ON AN AREA STABILIZED WITH CRUSHED STONE THAT DRAINS INTO AN APPROVED SEDIMENT TRAP OR SEDIMENT BASIN, AS SHOWN ABOVE.
4. DRIVE ENTRANCES ONTO RESIDENTIAL LOTS WILL NOT BE REQUIRED TO HAVE THE SEDIMENT BARRIER SHOWN, BUT WHEEL WASHING MAY BE REQUIRED IF STABILIZED ENTRANCE IS NOT SUFFICIENT TO KEEP MUD FROM BEING TRACKED ONTO ADJACENT STREET. ENTRANCE SHALL EXTEND FROM BACK OF CURB TO DWELLING.

TARGET

REVIEWED BY:

Site Development Manager ___ Review and Recommend ___ Not Recommend ___ Approved
Project Architect ___ Review and Recommend ___ Not Reviewed ___ Approved
Project Engineer (M) ___ Review and Recommend ___ Not Reviewed ___ Approved
Project Engineer (E) ___ Review and Recommend ___ Not Reviewed ___ Approved
Project Engineer (P) ___ Review and Recommend ___ Not Reviewed ___ Approved

Approval only for conformance of the site construction documents to Target Developer Guide, Section 2.3 and the Target building documents. Consultant is solely responsible for completeness, accuracy, and dimensions on the site construction documents.

CITY OF WICHITA

SOIL EROSION BMP DETAILS

CHRISTOPHER M. CARRIER, P.E.
STORM WATER ENGINEER

PROJECT NUMBER: 1301 FPS
CITY NO.: (667961)
DATE: MAY 2301
SHEET SG2.4 OF 14

18 08 05 12

DSNR: BER, KJW OPER: GSI SCALE: 1=1.00
Q:\2002\02603\002\PPSS\SEDIMP_PEC_DTL53-R14 11-12-2003 11:27:09 am