CONSTRUCTION PLANS FOR

LATERAL 2, MAIN 23

OF THE

WAR INDUSTRIES SEWER

THE CITY OF WICHITA,

SEDGWICK COUNTY, KANSAS

MICHAEL E. LINDEBAK, P.E. CITY ENGINEER

INDEX OF SHEETS

SHEET NO. 1	TITLE SHEET
SHEET NO. 2	KEY MAP
SHEET NO. 3	PLAT
SHEET NO. 4-5	PLAN/PROFILE
SHEET NO. 6	MANHOLE DETAIL SHEET
SHEET NO. 7	MANHOLE DETAIL SHEET
SHEET NO. 8	FRAME & COVER DETAIL SHEET

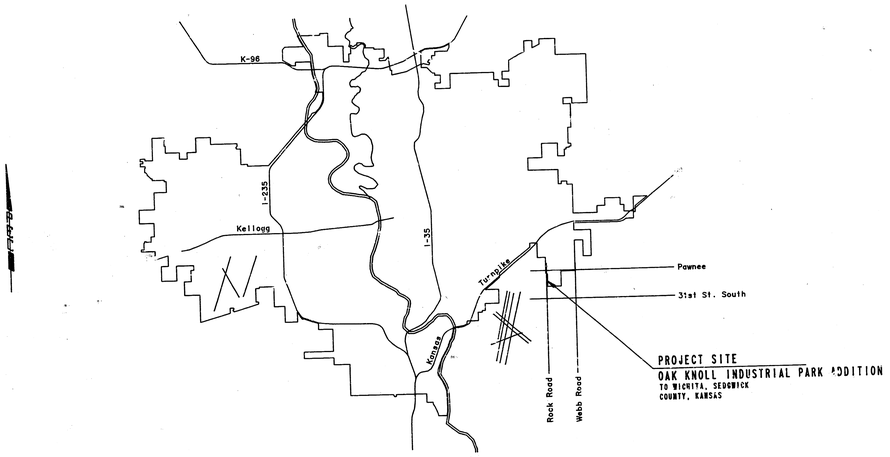

LOCATION MAP

CITY OF WICHITA PROJECT NO. 468-76-245-81142-000-000-001

APRIL, 1986

PLANS PREPARED BY

PROFESSIONAL ENGINEERING CONSULTANTS, P.A.

ENGINEERS

WICHITA, KANSAS

AS BUILT
RPL
10-87

KEVIN LAWRENCE ROOD
LICENSED
10104
KANSAS
PROFESSIONAL ENGINEER

1/8

FILMED FROM THE BEST AVAILABLE COPY

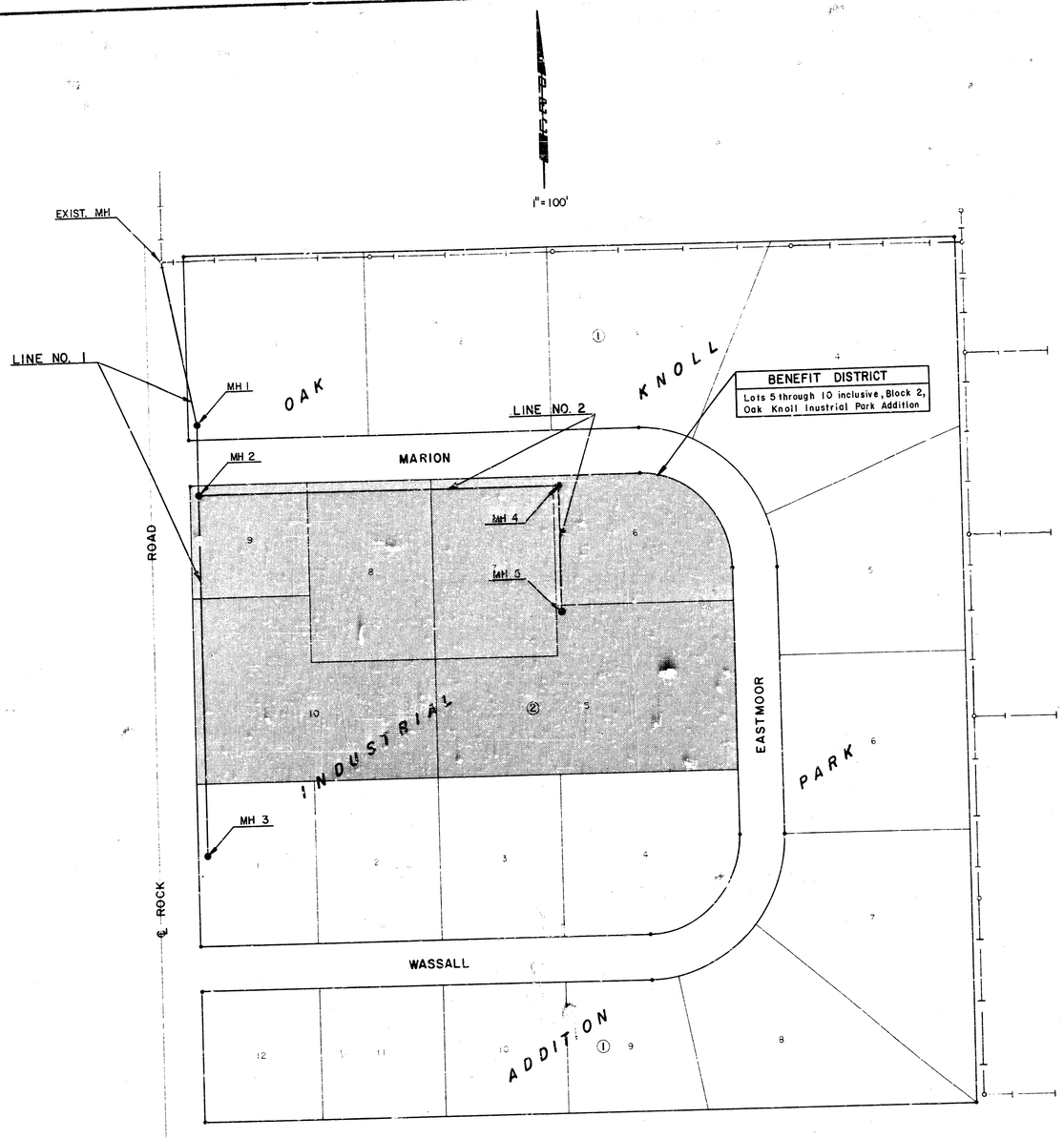

GENERAL NOTES

1. ALL CONSTRUCTION AND MATERIALS TO COMPLY WITH CITY OF WICHITA SPECIFICATIONS AND STANDARDS.

2. ALL ELEVATIONS SHOWN ARE CITY OF WICHITA DATUM (USGS-1187.4 = CITY DATUM).

3. THE CONTRACTOR SHALL LIMIT THE EXTENT OF TRENCH TO REMAIN OPEN OVERNIGHT AND WEEKENDS TO LESS THAN 50 FEET.

4. AT LEAST 48 HOURS PRIOR TO BEGINNING EXCAVATION, (EXCLUDING WEEKENDS AND HOLIDAYS), THE CONTRACTOR SHALL CONTACT THE KANSAS ONE-CALL SYSTEM, A UTILITY LOCATION SERVICE, AT (316) 687-2470 TO REQUEST THE FOLLOWING UTILITY COMPANIES TO LOCATE ANY EXISTING LINES WITHIN THE PROJECT AREA: SOUTHWESTERN BELL TELEPHONE CO., GAS SERVICE COMPANY, K.G.&E., THE WICHITA WATER DEPARTMENT, AND AIR CAPITAL CABLEVISION.

5. THE BURIED UTILITIES AS LOCATED ON THE PLANS ARE APPROXIMATE LOCATIONS ONLY. IT SHOULD BE NOTED THAT OTHER BURIED LINES AND CABLES MAY EXIST WHICH ARE NOT SHOWN ON THESE PLANS. THE CONTRACTOR SHALL EXERCISE EXTREME CAUTION DURING TRENCHING OPERATIONS TO AVOID DAMAGING THESE LINES. ANY LINES DAMAGED SHALL BE REPLACED OR REPAIRED IMMEDIATELY AS DIRECTED BY THE ENGINEER AT THE CONTRACTOR'S EXPENSE.

6. THE CONTRACTOR SHALL RESTORE ALL DITCHES, SWALES, ROAD SHOULDERS, ENTRANCES, AND BANK LINES TO THEIR ORIGINAL SLOPES UNLESS SHOWN OTHERWISE ON THE PLANS.

7. THE CONTRACTOR SHALL BE RESPONSIBLE FOR PRESERVING PROPERTY IRONS. THE CONTRACTOR SHALL BE REQUIRED TO RE-ESTABLISH ANY PROPERTY IRONS WHICH ARE DAMAGED OR DESTROYED BY HIS CONSTRUCTION OPERATIONS. SUCH IRONS SHALL BE RE-ESTABLISHED BY A LICENSED LAND SURVEYOR OR A LICENSED PROFESSIONAL ENGINEER IN ACCORDANCE WITH STATE LAWS. ALL COSTS FOR THIS WORK SHALL BE SUBSIDIARY TO THE OTHER ITEMS OF WORK.

8. ALL EXCESS EXCAVATED MATERIAL FROM THIS PROJECT SHALL BE WASTED AS DIRECTED OR APPROVED BY THE ENGINEER. NO EXCESS MATERIAL SHALL BE PLACED WITHIN STREET RIGHTS-OF-WAY. THE CONTRACTOR SHALL CONTACT THE DEVELOPER FOR INFORMATION PERTAINING TO ACCEPTABLE LOCATIONS FOR THE DISPOSITION OF WASTE MATERIAL ON SITE. WASTE MATERIAL SHALL BE BLADED SMOOTH AND SLOPED TO DRAIN. THIS WORK SHALL BE SUBSIDIARY TO OTHER BID ITEMS.

9. WHERE SHOWN, THE CONTRACTOR SHALL GRADE ALONG THE SANITARY SEWER ALIGNMENT TO THE PROFILE AND ELEVATIONS SHOWN ON THE PLANS. THE CONTRACTOR SHOULD VISIT THE SITE TO DETERMINE THE EXTENT OF GRADING PRIOR TO PREPARATION OF HIS BID. ALL COSTS FOR GRADING SHALL BE SUBSIDIARY TO THE PROJECT.

10. CONTRACTOR SHALL PROVIDE POSITIVE DRAINAGE AWAY FROM ALL MANHOLE COVERS.

KEVIN LAWRENCE LINDEBAK LICENSED 10104 KANSAS PROFESSIONAL ENGINEER

No	Revision	By	Date

LATERAL 2, MAIN 23 OF THE WAR INDUSTRIES SEWER

KEY MAP

MICHAEL E. LINDEBAK, P.E. - CITY ENGINEER
CITY OF WICHITA PROJECT NO. 468-76-245-81142-000-000-001

PROFESSIONAL ENGINEERING CONSULTANTS, P.A.
ENGINEERS
WICHITA, KANSAS

2/8

Designed by	Job No. 34-86117-4	Sht. 2 of 8
Drawn by DMM	Date April, 1986	

FILMED FROM THE BEST AVAILABLE COPY

P-Q 5-28

P-Q 5-28

OAK KNOLL INDUSTRIAL PARK ADDITION
TO WICHITA, SEDGWICK COUNTY, KANSAS

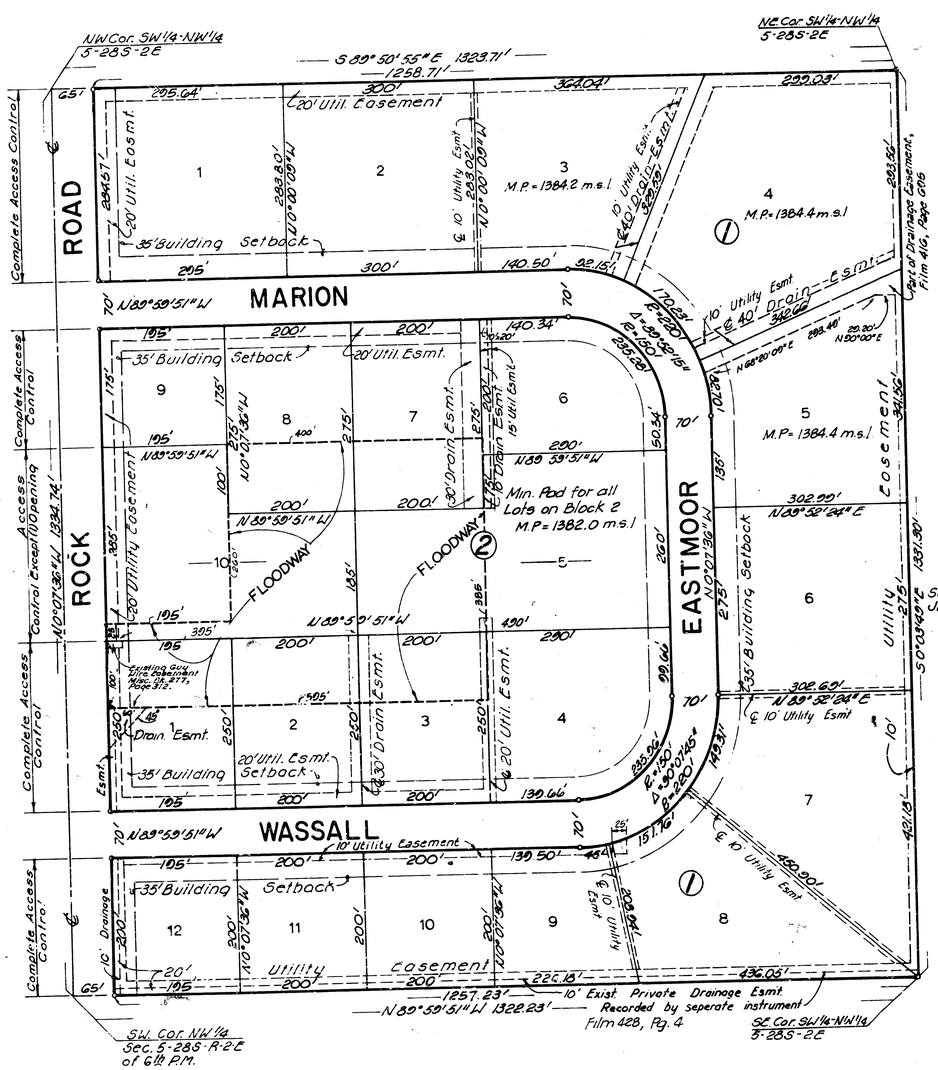

BM = Rock Road and Pawnee East, City of Wichita bench mark disc, 62' East and 53' North of center line both. Elev. 1188.25

Min. Pad Elev. as shown on Plat.

State of Kansas SS
County of Sedgwick

I, E.W. Linn, a Professional Engineer in aforesaid State and County, do hereby certify that on this 9th day of June 1981, I have caused to be surveyed and platted OAK KNOLL INDUSTRIAL PARK ADDITION to Wichita, Sedgwick County, Kansas, into lots, blocks, streets and a floodway described as follows: Beginning at the Southwest Corner of the NW1/4 of Section 5, Township 28 South, Range 2 East of the 6th P.M., Thence Bearing N0°01'32"W along the West Line of said Section 5 a distance of 1334.74 feet to the Northwest Corner of the SW1/4 of said NW1/4; Thence bearing S 89° 50' 55" E a distance of 1323.71 feet to Northeast Corner of the SW1/4 of said NW1/4; Thence bearing S0°03'49"E along the West Line of Oak Knoll 2nd Addition a distance of 1331.30 feet to the Southeast Corner of the SW1/4 of said NW1/4; Thence bearing N89°59'51" W a distance of 1322.23 feet to the point of beginning.

E. W. Linn
E. W. Linn, P.E.
No. 3684

Know all men by these presents that we, the undersigned properly owners of the land as above set forth in the Engineer's Certificate, have caused the land to be surveyed and platted into lots, blocks, streets and a floodway, same to be known as OAK KNOLL INDUSTRIAL PARK ADDITION to Wichita, Sedgwick County, Kansas. Easements, as indicated for the construction and maintenance of public utilities and drainage, are hereby granted. The streets are hereby dedicated to and for the use of the public. The floodway shall be the responsibility of the owners of the lots on which the floodway is located until such time as the governing body exercising jurisdiction elects to assume the responsibility for maintenance and improvement of the drainage, provided, however, that no building shall be constructed on or within said floodway, nor shall any fill, change of grade, creation of channel or other work be carried on without the permission of the Wichita-Sedgwick County Flood Control office or their successors of office. All abutters' right of access to and from Rock Road, over and across the West lines of Blocks 1 and 2, are hereby granted to the City of Wichita. Provided however, that Lot 10, Blk. 2 shall have access to Rock Road at one (1) location, as shown, said location to be designated by the City of Wichita, Kansas. Minimum Pad Elevation for all lots in Block 2 shall be 1382.0; for Lot 3, Block 1; 1384.2 & for Lot 4 & 5 Block 1; 1384.4 m.s.l. as shown.

American Land Development Company, Inc.

B.G. Stout, Jr. President

Byron G. Stout III Secretary

State of Kansas SS
County of Sedgwick

Be it remembered that on this 11 day of June, 1981, before me, a Notary Public in aforesaid state and county, came B.G. Stout Jr. & Byron G. Stout III, Secretary of American Land Development Company Inc., to me personally known to be the same persons who executed the foregoing instrument of writing and duly acknowledge the execution of same for and on behalf and as the act and deed of said corporation, in testimony whereof I have hereunto set my hand and affixed my notarial seal the day and year above written.

Frank F. Rucker Notary Public

My Commission Expires: [illegible]

We, B.G. Stout Jr. and Elmina G. Stout, mortgagees on the above described tract, do hereby consent to the platting of Oak Knoll Industrial Park Addition to Wichita, Sedgwick County, Kansas.

B.G. Stout Jr.

Elmina G. Stout

State of Kansas SS
County of Sedgwick

Be it remembered that on this 11 day of June, 1981, before me, a notary public in aforesaid state and county, came B.G. Stout Jr. and Elmina G. Stout, to me personally known to be the same persons who executed the foregoing instrument of writing and duly acknowledge the execution of same for & on behalf & as the act & deed of said persons, in testimony whereof I have here unto set my hand & affixed my notarial seal the day and year above written.

Frank F. Rucker Notary Public

My Commission Expires [illegible]

FRANK F. RUCKER

This plat has been submitted to and approved by the Wichita-Sedgwick County Metropolitan Area Planning Commission, Wichita, Kansas, this 9th day of April, 1981

Alvin J. Hennessy, Jr. Chairman

Robert A. Lakin Secretary

Robert A. Lakin

This plat approved and all dedications shown hereon are accepted by the City Commission of the City of Wichita, Kansas, this 1st day of July, 1981.

[illegible] Mayor
R.C. Brown

Donald C. Gisick City Clerk
Donald C. Gisick

This plat approved and all dedications shown hereon are accepted by the Board of County Commissioners of Sedgwick County, Kansas, this 29 day of July 1981

Donald E. Gragg Chairman
Donald E. Gragg

Jack Spratt Commissioner
Jack Spratt

Tom Scott Commissioner
Tom Scott

Attest Dorothy K. White
Dorothy K. White
County Clerk

Entered on transfer record this 29 day of July, 1981.

Dorothy K. White County Clerk
Dorothy K. White

This is to certify that this instrument was filed for record in the Register of Deeds Office at 2:00 P.M. on the 29th day of July, 1981.

Bettie F. McCart Register of Deeds
Bettie F. McCart

[illegible] Deputy
Pat Kettler

Sht. 3 of 8

24th Covenant 6487 pg 207

P-Q 5-28

FILMED FROM THE BEST AVAILABLE COPY....

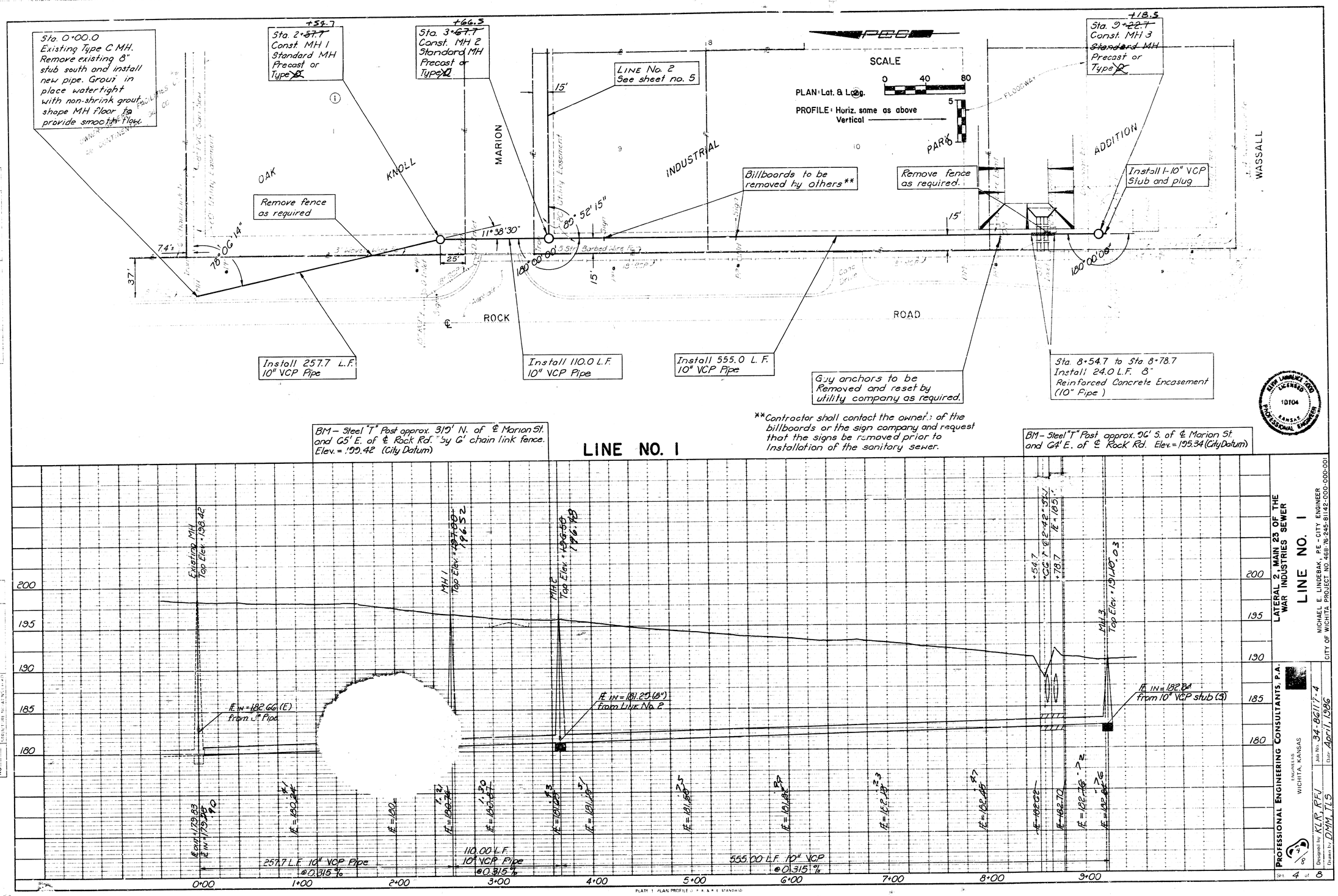

LATERAL 2, MAIN 23 OF THE WAR INDUSTRIES SEWER

LINE NO. 1

MICHAEL E. LINDEBAK, P.E. - CITY ENGINEER
CITY OF WICHITA PROJECT NO. 468-76-245-81142-000-000-001

PROFESSIONAL ENGINEERING CONSULTANTS, P.A.
ENGINEERS
WICHITA, KANSAS

Designed by KLR, RFJ
Drawn by DMM, TLS
Job No. 34-86117-4
Date April, 1986

Sheet 4 of 8

PLAN
PROFILE

FILMED FROM THE BEST AVAILABLE COPY

LINE NO. 2

Sta. 3+67.7, LINE No. 1
Sta. 0+00.0, LINE No. 2
MH 2

Sta. 5+90.0
Const. MH 4
Standard MH
Precast or
Type C

Sta. 5+90.0
MH 4

Sta. 7+85.0
Const. MH 5
Standard MH
Precast or
Type C

OAK
KNOLL
MARION
ROCK ROAD
INDUSTRIAL
PARK
ADDITION

Proposed Back of Curb

IDENTICAL POINTS

Install 590.0 L.F.
8" VCP Pipe

Sta. 5+55.0 to 5+90.0
Install 35.0 L.F. 8" Reinforced
Concrete encasement.

Install 195.0 L.F.
8" VCP Pipe

Install 1-6" Stub
and plug

89°52'15"
45°
15'
10'

LINE No. 1
See sheet no. 4

BM- Steel "T" Post approx. 36' S. of ℄ of Marion St.
and 64' E. of ℄ Rock Rd. Elev = 195.34 (City Datum)

SCALE
0 40 80
PLAN: Lat. & Long.
PROFILE: Horiz. same as above
Vertical
0 5

MH 2
Top Elev. = 192.50
IE OUT = 181.09
IE IN = 181.59
IE = 181.60
IE = 182.00
IE = 182.40
IE = 182.80
IE = 183.20
IE = 183.51
48°37'15"
IE = 184.7
+55.0
MH 4
Top Elev. = 194.60
IE OUT = 183.65
IE IN = 184.72
IE = 185.12
MH 5
Top Elev. = 193.40
IE OUT = 185.50
IE IN = 185.66
from 6" Stub (SE)
190.00 L.F. 8" VCP Pipe @ 0.40 %
195.0 L.F. 8" VCP Pipe @ 0.42 %
0:00 1:00 2:00 3:00 4:00 5:00 6:00 7:00
200 195 190 185 180

PLATE 1 PLAN PROFILE U. P. & R. I. STANDARD

LATERAL 2, MAIN 23 OF THE WAR INDUSTRIES SEWER
LINE NO. 2
MICHAEL E. LINDEBAK, P.E. - CITY ENGINEER
CITY OF WICHITA PROJECT NO. 468-76-245-81142-000-000-001

PROFESSIONAL ENGINEERING CONSULTANTS, P.A.
ENGINEERS
WICHITA, KANSAS
Job No. 34-86117-4
Date April, 1986
Designed by KLF, RFJ
Drawn by DMM, TLS
Sht 5 of 8

KENN LAWRENCE ROAD
LICENSED
10104
KANSAS
PROFESSIONAL ENGINEER

PLAN
PROFILE
NOTE BOOK
NO.

FILMED FROM THE BEST AVAILABLE COPY

SEWER APPURTENANCES DETAILS

ADOPTED AS STANDARD DESIGN
BY

City of Wichita, Kansas

STANDARD MANHOLE TYPE "C"

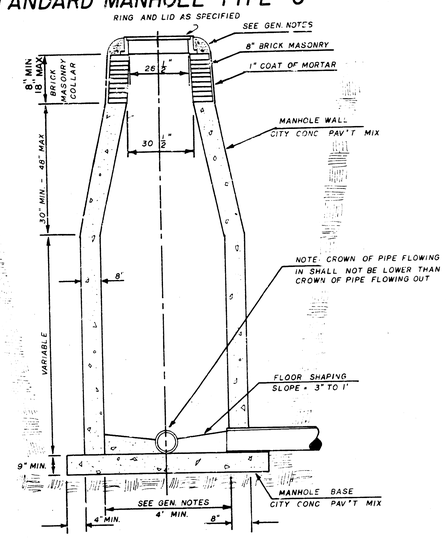

INSIDE DROP MANHOLE TYPE "C"

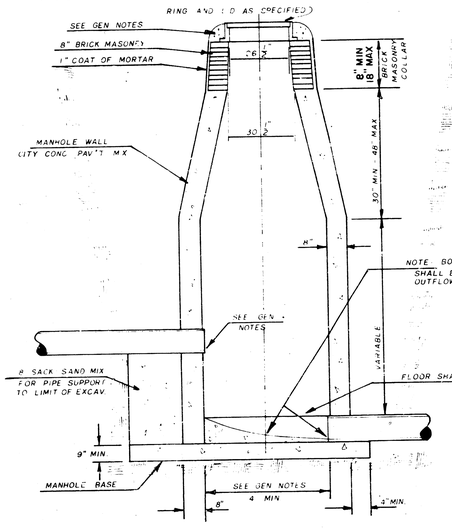

OUTSIDE DROP MANHOLE TYPE "C"

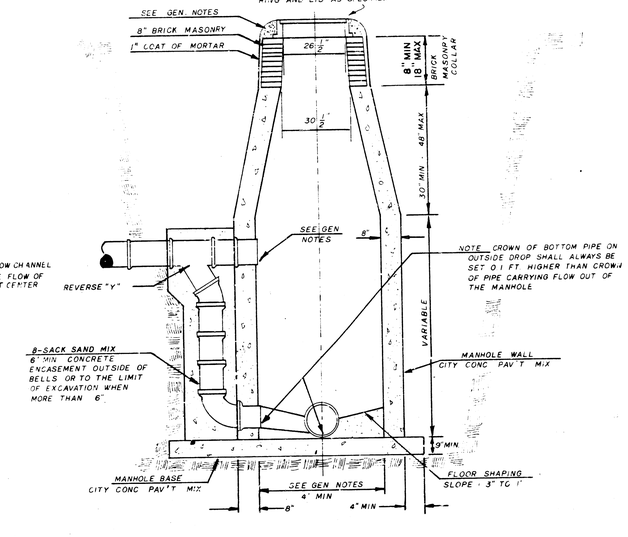

GENERAL NOTES

1. MORTAR USED IN MASONRY CONSTRUCTION SHALL CONTAIN 8 SACKS OF CEMENT PER CUBIC YARD. CONCRETE USED IN MANHOLE WALLS AND BASES SHALL CONFORM TO THE REQUIREMENTS OF CONCRETE FOR CONCRETE PAVEMENT CONSTRUCTION AS SPECIFIED IN THE CITY STANDARD PAVING SPECIFICATIONS USING CITY CONCRETE PAVEMENT MIX WITHOUT AIR ENTRAINING ADMIXTURE. MORTAR SHALL BE PLACED AROUND THE MANHOLE RING AS SHOWN ON THE DRAWINGS WHEN MANHOLES ARE CONSTRUCTED IN UNPAVED AREAS. TYPE "C" MANHOLES CAN BE CONSTRUCTED ONLY WHERE PIPE SIZES ARE 8" OR SMALLER. THE INSIDE DIAMETER OF TYPE "C" MANHOLES SHALL BE 4'. COMPLETED MANHOLE SHALL BE WITHOUT LEAKS AND WATER TIGHT.

2. REINFORCING STEEL SHALL BE INSTALLED IN THE MANHOLE BASE. REINFORCING STEEL SHALL CONSIST OF NO. 4 BARS PLACED ON 6" CENTERS IN BOTH DIRECTIONS. REINFORCING STEEL SHALL BE PLACED 6" ABOVE THE BOTTOM OF THE MANHOLE BASE. COST OF FURNISHING AND INSTALLING REINFORCING STEEL SHALL BE INCLUDED IN THE UNIT PRICE BID FOR THE MANHOLE.

3. AN OPENING SHALL BE CUT IN THE MANHOLE WALL FOR THE UPPER INLET PIPE FOR INSIDE AND OUTSIDE DROP MANHOLES. THE UPPER INLET PIPE SHALL BE GROUTED INTO THIS OPENING WITH NON-SHRINK GROUT. THE EXTERIOR OF THIS COMPLETED CONNECTION SHALL BE SEALED WITH AN APPROVED BITUMINOUS COATING SUCH THAT THE CONNECTION WILL BE WATER TIGHT.

4. THE FLOORS OF ALL MANHOLES SHALL BE SHAPED WITH FLOW CHANNELS SUCH THAT THE MANHOLES WILL BE SELF CLEANING AND FREE OF AREAS WHERE SOLIDS COULD BE DEPOSITED AS SEWAGE FLOWS THROUGH THE MANHOLE FROM ALL INLET PIPES TO THE OUTLET PIPE. FLOW CHANNELS SHALL BE FORMED TO MATCH THE BOTTOM HALVES OF THE INFLOWING PIPES AND THE OUTFLOWING PIPE AS SHOWN BY THE DRAWINGS EXCEPT FOR INSIDE DROP MANHOLES. FLOW CHANNELS FOR INSIDE DROP MANHOLES SHALL BE CONSTRUCTED AS INDICATED BY THE DRAWING. MANHOLE FLOORS SHALL HAVE SLOPES OF 3 INCHES PER FOOT IN THE AREAS OUTSIDE OF THE FLOW CHANNELS SLOPED TOWARD THE FLOW CHANNELS. PIPES LAID THROUGH MANHOLE SHALL HAVE THE TOP HALF REMOVED TO NEAT LINES FOR THE FULL INSIDE DIAMETER OF THE MANHOLE. MANHOLE FLOORS SHALL THEN BE SHAPED AROUND THE BOTTOM HALF OF THE PIPE WHICH FORMS THE FLOW CHANNEL.

5. PIPES INSTALLED WITHIN THE EXCAVATION MADE FOR THE MANHOLE SHALL BE CRADLED WITH CONCRETE TO THE LIMITS OF THE MANHOLE EXCAVATION. WHEN CLAY PIPE IS USED, THE CRADLE SHALL EXTEND TO THE FIRST JOINT OUTSIDE THE MANHOLE. THE CRADLE SHALL BE TERMINATED AT THE CLAY PIPE JOINT IN A MANNER WHICH WILL MAINTAIN THE FLEXIBILITY OF THE JOINT. COST OF CRADLE WITHIN MANHOLE EXCAVATION OR TO CLAY PIPE JOINTS ADJACENT TO MANHOLE SHALL BE INCLUDED IN THE UNIT PRICE BID FOR THE MANHOLE.

6. MANHOLE COVER CASTINGS AND MANHOLE FRAME CASTINGS SHALL CONFORM TO THE REQUIREMENTS AS INDICATED IN THE STANDARD SPECIFICATIONS AND AS SHOWN IN THE STANDARD DETAIL DRAWING.

7. THE VERTICAL DROP IN INSIDE DROP MANHOLES SHALL NOT EXCEED 4' FOR INFLOWING PIPES SIZED 12" OR SMALLER AND 2' FOR INFLOWING PIPES LARGER THAN 12". THE CROWNS OF INFLOWING PIPES SHALL NEVER BE SET LOWER THAN THE CROWN OF THE OUTFLOWING PIPE.

8. STANDARD MANHOLES TYPE "C" AND STANDARD INSIDE DROP MANHOLES TYPE "C" SHALL BE BID AS STANDARD MANHOLES FOR THE TYPE AND DIAMETER INDICATED. OUTSIDE DROP MANHOLES TYPE "C" SHALL BE BID AS STANDARD OUTSIDE DROP MANHOLES FOR THE TYPE AND DIAMETER INDICATED. ALL MANHOLE DIAMETERS WILL BE 4' UNLESS INDICATED OTHERWISE.

JNL JAN. 1982

FILMED FROM THE BEST AVAILABLE COPY

SEWER APPURTENANCES DETAILS
ADOPTED AS STANDARD DESIGN
BY
CITY OF WICHITA

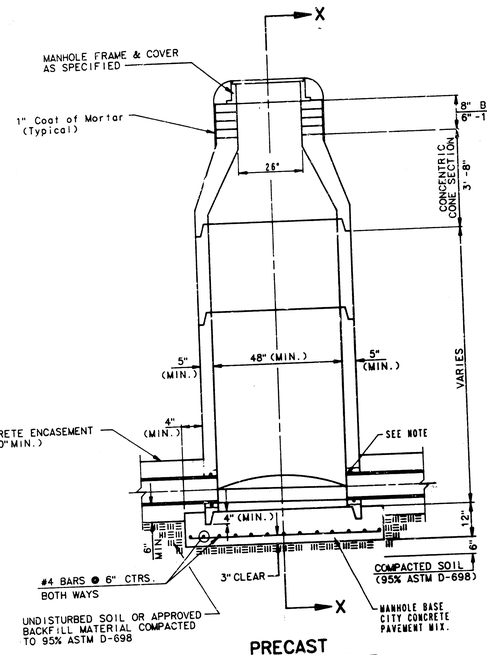

PRECAST
STANDARD MANHOLE

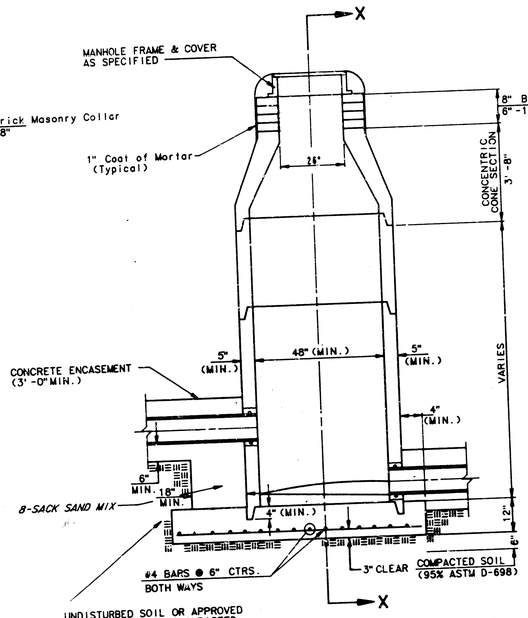

PRECAST
INSIDE DROP MANHOLE

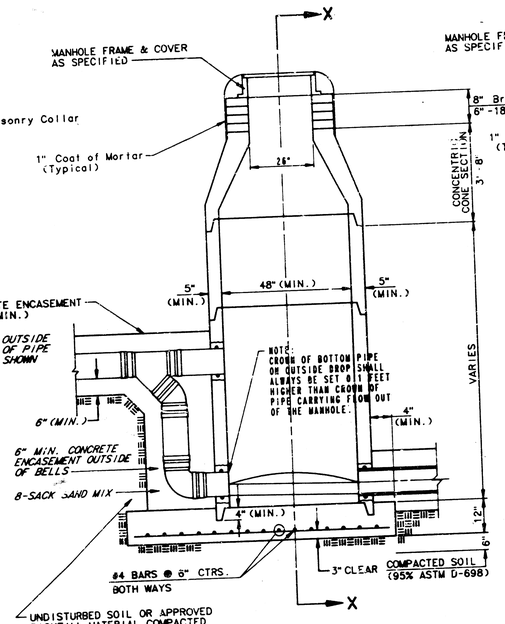

PRECAST
OUTSIDE DROP MANHOLE

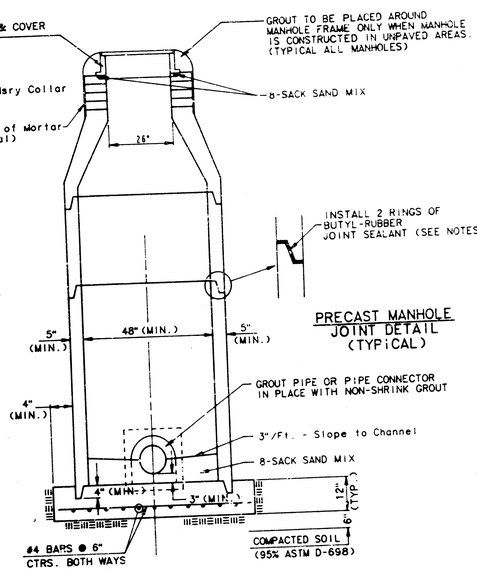

PRECAST MANHOLE
JOINT DETAIL
(TYPICAL)

SECTION X
(TYPICAL)

GENERAL NOTES

PRECAST MANHOLE NOTES

1. ALL PRECAST CONCRETE MANHOLE SECTIONS SHALL CONFORM TO THE LATEST REVISION OF A.S.T.M. C478 AS MODIFIED BY THE SPECIFICATIONS.
2. NON-SHRINK GROUT SHALL BE NON-METALLIC TYPE.
3. APPROVED FLEXIBLE WATERSTOP GASKETS SHALL BE INSTALLED TO JOIN THE SEWER TO THE MANHOLE WALL WHEN A.B.S. COMPOSITE PIPE OR P.V.C. PIPE IS USED. FOR OTHER TYPES OF PIPE THE SEWER SHALL BE GROUTED IN PLACE WITH NON-SHRINK GROUT. THE SEWER PIPE SHALL BE SUPPORTED WITH CONCRETE ENCASEMENT A MINIMUM OF 3 FEET FROM THE MANHOLE WALL AND TO THE FIRST JOINT FOR V.C.P. SUCH THAT THE JOINT REMAINS FLEXIBLE.
4. ALL INSIDE SURFACES OF THE CONCRETE MANHOLE WHICH WOULD BE EXPOSED TO SEWER GAS SHALL BE COATED WITH 2 COATS TNEMEC SERIES 66 HI-BUILD EPOXOLINE, DRY THICKNESS OF 8 MILS (MIN.)
5. EXTERIOR MANHOLE WALLS SHALL BE COATED WITH 1 COAT MOBILARMA 633 BITUMINUS COATING.
6. JOINT SEALING COMPOUND SHALL BE KENT SEAL NO. 2 OR APPROVED EQUAL.
7. PRECAST MANHOLES SHALL BE SET AT LEAST 4 INCHES INTO THE MANHOLE BASE.
8. TOP OF MANHOLE FLOOR SLAB SHALL BE AT LEAST 3 INCHES BELOW THE FLOW LINE OF THE OUTLET PIPE TO INSURE SUFFICIENT MINIMUM THICKNESS OF SHAPED INVERT.
9. LIFTING HOLES SHALL BE FILLED WITH NON-SHRINK GROUT AND THE INTERIOR SURFACE COATED AS SPECIFIED.
10. MORTAR USED IN MASONRY CONSTRUCTION SHALL CONTAIN 8 SACKS OF CEMENT PER CUBIC YARD. CONCRETE USED IN MANHOLE BASES SHALL CONFORM TO THE REQUIREMENTS OF CONCRETE FOR CONCRETE PAVEMENT CONSTRUCTION AS SPECIFIED IN THE CITY STANDARD PAVING SPECIFICATIONS USING CITY CONCRETE PAVEMENT MIX WITHOUT AIR ENTRAINING ADMIXTURE. MORTAR SHALL BE PLACED AROUND THE MANHOLE RING AS SHOWN ON THE DRAWINGS WHEN MANHOLES ARE CONSTRUCTED IN UNPAVED AREAS. MANHOLES CONSTRUCTED WHERE PIPE SIZES ARE SMALLER THAN 24" SHALL HAVE AN INSIDE DIAMETER OF 4'. MANHOLES CONSTRUCTED WHERE PIPE SIZES ARE 24" OR LARGER SHALL HAVE AN INSIDE DIAMETER OF 5'. COMPLETED MANHOLE SHALL BE WITHOUT LEAKS AND WATER TIGHT.
11. REINFORCING STEEL SHALL BE INSTALLED IN THE MANHOLE BASES AND SHALL CONSIST OF NO. 4 BARS PLACED ON 6" CENTERS IN BOTH DIRECTIONS. THE MANHOLE BASE REINFORCEMENT SHALL BE PLACED AT LEAST 3" ABOVE THE BOTTOM OF THE MANHOLE BASE. ALL COSTS FOR FURNISHING AND INSTALLING REINFORCING STEEL SHALL BE INCLUDED IN THE UNIT PRICE BID FOR THE MANHOLE.
12. OPENINGS SHALL BE CUT INTO THE MANHOLE WALL WHEN OUTSIDE DROPS ARE CONSTRUCTED ON EXISTING MANHOLES. SUCH OPENINGS CUT INTO EXISTING MANHOLES SHALL BE AS SMALL AS PRACTICAL TO FACILITATE INSTALLING AND GROUTING THE NEW PIPE IN PLACE. WATERSTOP GASKETS SHALL BE USED WITH P.V.C. AND A.B.S. COMPOSITE PIPE. THE NEW PIPE SHALL BE GROUTED INTO THE OPENING USING AN APPROVED NONSHRINK GROUT FOR THE FULL MANHOLE WALL THICKNESS. THE EXTERIOR OF THE COMPLETED CONNECTION SHALL BE SEALED WITH AN APPROVED BITUMINOUS COATING SUCH THAT THE CONNECTION WILL BE WATER TIGHT. FLOOR OF MANHOLE SHALL BE MODIFIED TO FORM NEW FLOW CHANNEL FOR THE NEW CONNECTION AS INDICATED BY THE DRAWING. THIS WORK, INCLUDING MODIFICATION OF MANHOLE FLOOR, SHALL BE PAID FOR AT THE UNIT PRICE BID FOR OUTSIDE DROP STACK CONSTRUCTED ON EXISTING MANHOLE.
13. THE FLOORS OF ALL MANHOLES SHALL BE SHAPED WITH FLOW CHANNELS SUCH THAT THE MANHOLES WILL BE SELF CLEANING AND FREE OF AREAS WHERE SOLIDS COULD BE DEPOSITED AS SEWAGE FLOWS THRUGH THE MANHOLE FROM ALL INLET PIPES TO THE OUTLET PIPE. FLOW CHANNELS SHALL BE FORMED TO MATCH THE BOTTOM AREAS OF THE INFLOWING PIPES AND THE OUTFLOWING PIPE AS SHOWN BY THE DRAWINGS EXCEPT FOR INSIDE DROP MANHOLES. FLOW CHANNELS FOR INSIDE DROP MANHOLES SHALL BE CONSTRUCTED AS INDICATED BY THE DRAWING. MANHOLE FLOORS SHALL HAVE SLOPES OF 3 INCHES PER FOOT IN THE AREAS OUTSIDE OF THE FLOW CHANNELS SLOPED TOWARD THE FLOW CHANNELS. PIPES LAID THROUGH MANHOLES SHALL HAVE THE TOP HALF REMOVED TO MEET LINES FOR THE FULL INSIDE DIAMETER OF THE MANHOLE. MANHOLE FLOORS SHALL THEN BE SHAPED AROUND THE BOTTOM HALF OF THE PIPE WHICH FORMS THE FLOW CHANNEL.
14. PIPES INSTALLED WITHIN THE EXCAVATION MADE FOR THE MANHOLE SHALL BE CRADLED WITH CONCRETE TO THE LIMITS OF THE MANHOLE EXCAVATION. WHEN CLAY PIPE IS USED, THE CRADLE SHALL EXTEND TO THE FIRST JOINT OUTSIDE THE MANHOLE. THE CRADLE SHALL BE TERMINATED AT THE CLAY PIPE JOINT IN A MANNER WHICH WILL MAINTAIN THE FLEXIBILITY OF THE JOINT. COST OF CRADLE WITHIN MANHOLE EXCAVATION OR TO CLAY PIPE JOINTS ADJACENT TO MANHOLE SHALL BE INCLUDED IN THE UNIT PRICE BID FOR THE MANHOLE.
15. MANHOLE COVER CASTINGS AND MANHOLE FRAME CASTINGS SHALL CONFORM TO THE REQUIREMENTS AS INDICATED IN THE STANDARD SPECIFICATIONS AND AS SHOWN IN THE STANDARD DETAIL DRAWING.
16. THE VERTICAL DROP IN INSIDE DROP MANHOLES SHALL NOT EXCEED 4'. FOR INFLOWING PIPES SIZED 12" OR SMALLER AND 2' FOR INFLOWING PIPES LARGER THAN 12". THE CROWNS OF INFLOWING PIPES SHALL NEVER BE SET LOWER THAN THE CROWN OF THE OUTFLOWING PIPE.
17. STANDARD MANHOLES AND STANDARD INSIDE DROP MANHOLES SHALL BE BID AS STANDARD MANHOLES FOR THE TYPE AND DIAMETER INDICATED. AS STANDARD OUTSIDE DROP MANHOLES SHALL BE BID AS STANDARD OUTSIDE DROP OUTSIDE DROP MANHOLES FOR THE TYPE AND DIAMETER INDICATED. ALL MANHOLE DIAMETERS WILL BE 4' UNLESS INDICATED OTHERWISE.
18. A BRICK MASONRY COLLAR SHALL BE INSTALLED BETWEEN THE CAST IRON FRAME AND THE CONCENTRIC CONE. THE COLLAR WILL HAVE 8" WALLS AND A VERTICAL HEIGHT OF 6" MINIMUM AND 18" MAXIMUM. A 1" COAT OF MORTAR WILL BE PLASTERED ON THE OUTSIDE OF THE COLLAR.

FILMED FROM THE BEST AVAILABLE COPY

MANHOLE FRAME AND COVER DETAIL

ADOPTED AS STANDARD DESIGN

BY

City of Wichita, Kansas

MANHOLE COVER

Weight: 190 Lbs.

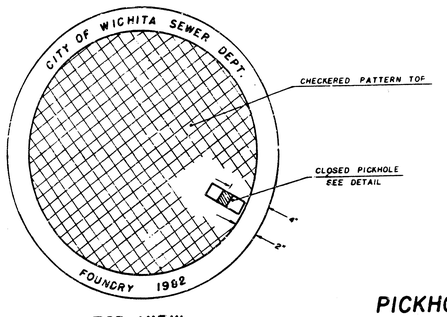

TOP VIEW

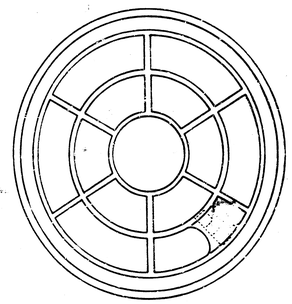

BOTTOM VIEW

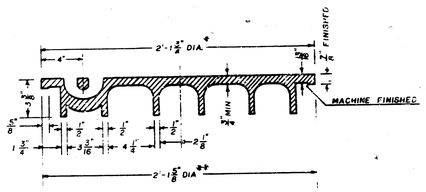

SECTION VIEW

* OUTSIDE DIA TOP OF COVER
** OUTSIDE DIA. BOTTOM OF COVER

PICKHOLE DETAIL

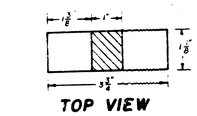

TOP VIEW

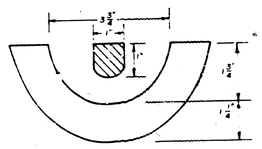

SECTION VIEW

MANHOLE FRAME

Weight: 240 Lbs.

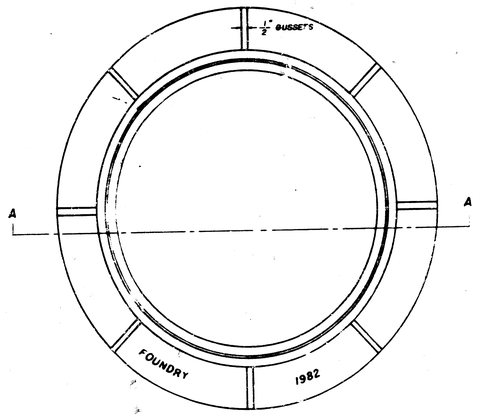

TOP VIEW

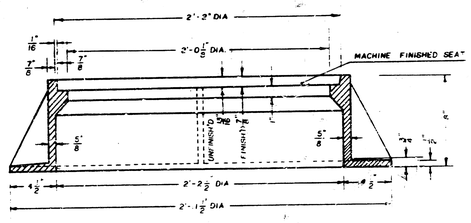

SECTION A-A

GENERAL NOTES

1. MANHOLE CASTINGS SHALL BE MANUFACTURED USING GOOD QUALITY GRAY IRON CONFORMING TO CLASS 30 OF A.S.T.M. DESIGNATION A-48. DIMENSIONS AND WEIGHTS SHOWN ON THE DETAILED DRAWINGS SHALL BE CONSIDERED AS MINIMUM REQUIREMENTS AND ANY DEVIATIONS FROM THE DIMENSIONS SHOWN MUST BE SPECIFICALLY APPROVED. THE FINISHED CASTINGS SHALL BE OF UNIFORM QUALITY, FREE FROM BLOWHOLES, POROSITY, HARD SPOTS, SHRINKAGE DISTORTIONS OR OTHER DEFECTS.

2. MANHOLE CASTINGS SHALL BE COATED WITH AN ASPHALT PAINT RESULTING IN A SMOOTH, TOUGH AND TENACIOUS COATING WHICH IS NOT BRITTLE OR TACKY.

3. MANHOLE CASTINGS SHALL BE MANUFACTURED SUCH THAT A COVER MANUFACTURED BY ANY ONE FOUNDRY WILL FIT INTERCHANGEABLY INTO A FRAME MANUFACTURED BY ANOTHER FOUNDRY AND STILL MEET ALLOWABLE CLEARANCES AND NON-ROCKING REQUIREMENTS. THIS WILL REQUIRE MANUFACTURING OF THE MATCHING FACES ON THE COVER AND THE FRAME TO CLOSE TOLERANCES.

4. THE OUTSIDE CIRCUMFERENCE OF THE VERTICAL FACE OF THE COVER AND THE INSIDE CIRCUMFERENCE OF THE VERTICAL FACE IN THE FRAME RECESS SHALL BE MANUFACTURED TO TOLERANCES SUCH THAT THE CLEARANCE BETWEEN THE COVER AND FRAME WILL NOT EXCEED 1/8" AT ANY POINT AROUND THE CIRCUMFERENCE OF THE COVER. THE SEATING SURFACES BETWEEN THE COVER AND FRAME SHALL BE MACHINED SUCH THAT THESE SURFACES SHALL MAKE FULL CONTACT FOR THEIR FULL CIRCUMFERENCE TO PRECLUDE THE COVER FROM ROCKING IN THE FRAME.

5. THE MANHOLE FRAME AND COVER SHALL BE MARKED WITH LETTERING INDICATING THE NAME OF THE MANUFACTURER AND THE YEAR WHEN THE COVER OR FRAME WAS CAST. THE COVER SHALL BE FURTHER IDENTIFIED WITH REGARDS TO OWNERSHIP USING LETTERS AT LEAST 1" IN HEIGHT. THIS IDENTIFICATION SHALL BE "CITY OF WICHITA SEWER DEPARTMENT". THE WORD DEPARTMENT MAY BE ABBREVIATED. THE TEXTURE OF THE TOP SURFACE OF THE COVER SHALL BE MANUFACTURED IN A CHECKERED PATTERN DESIGN AS INDICATED ON THE DRAWINGS. SMOOTH BLOCKOUTS SHALL BE UTILIZED TO HIGHLIGHT THE LETTERING ON THE COVER SURFACE. THE TOTAL AREA OF SMOOTH SURFACE BLOCKOUT SHALL NOT EXCEED THE AREA AS INDICATED ON THE DRAWING. POSITIONING OF SMOOTH BLOCKOUTS AND LETTERING MAY VARY FROM THAT SHOWN ON THE DETAILED DRAWING.

JNL DEC. 1981

FILMED FROM THE BEST AVAILABLE COPY