CONSTRUCTION PLANS FOR

LATERAL 11, MAIN 24

OF THE

WAR INDUSTRIES SEWER

IN

THE CITY OF WICHITA,

SEDGWICK COUNTY, KANSAS

MICHAEL E. LINDEBAK, P.E.-CITY ENGINEER

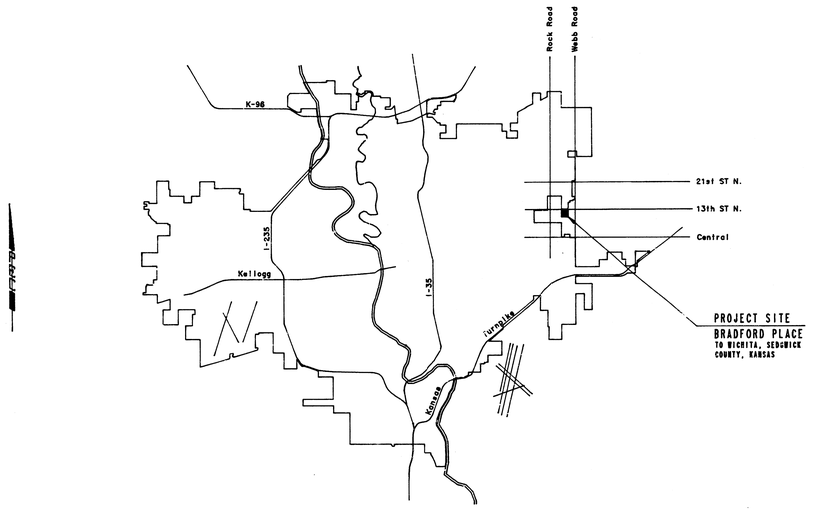

LOCATION MAP

INDEX OF SHEETS

SHEET NO. 1	TITLE SHEET
SHEET NO. 2	KEY MAP
SHEET NO. 3	EASEMENT GRADING
SHEET NO. 4	PLAT
SHEET NO. 5-7	PLAN/PROFILE
SHEET NO. 8	TYPE "D" MANHOLE DETAILS
SHEET NO. 9	TYPE "P" MANHOLE DETAILS
SHEET NO. 10	TYPE "C" MANHOLE DETAILS
SHEET NO. 11	FRAME & COVER DETAIL
SHEET NO. 12	RISER DETAILS

CITY OF WICHITA PROJECT NO. 468-76-245-81781-000-000-001

DECEMBER, 1987

PLANS PREPARED BY

PROFESSIONAL ENGINEERING CONSULTANTS, P.A.

ENGINEERS

WICHITA, KANSAS

MICHAEL D. SCHOLAND LICENSED 6778 KANSAS PROFESSIONAL ENGINEER

AS BUILT
4-29-88
RDL

1/12

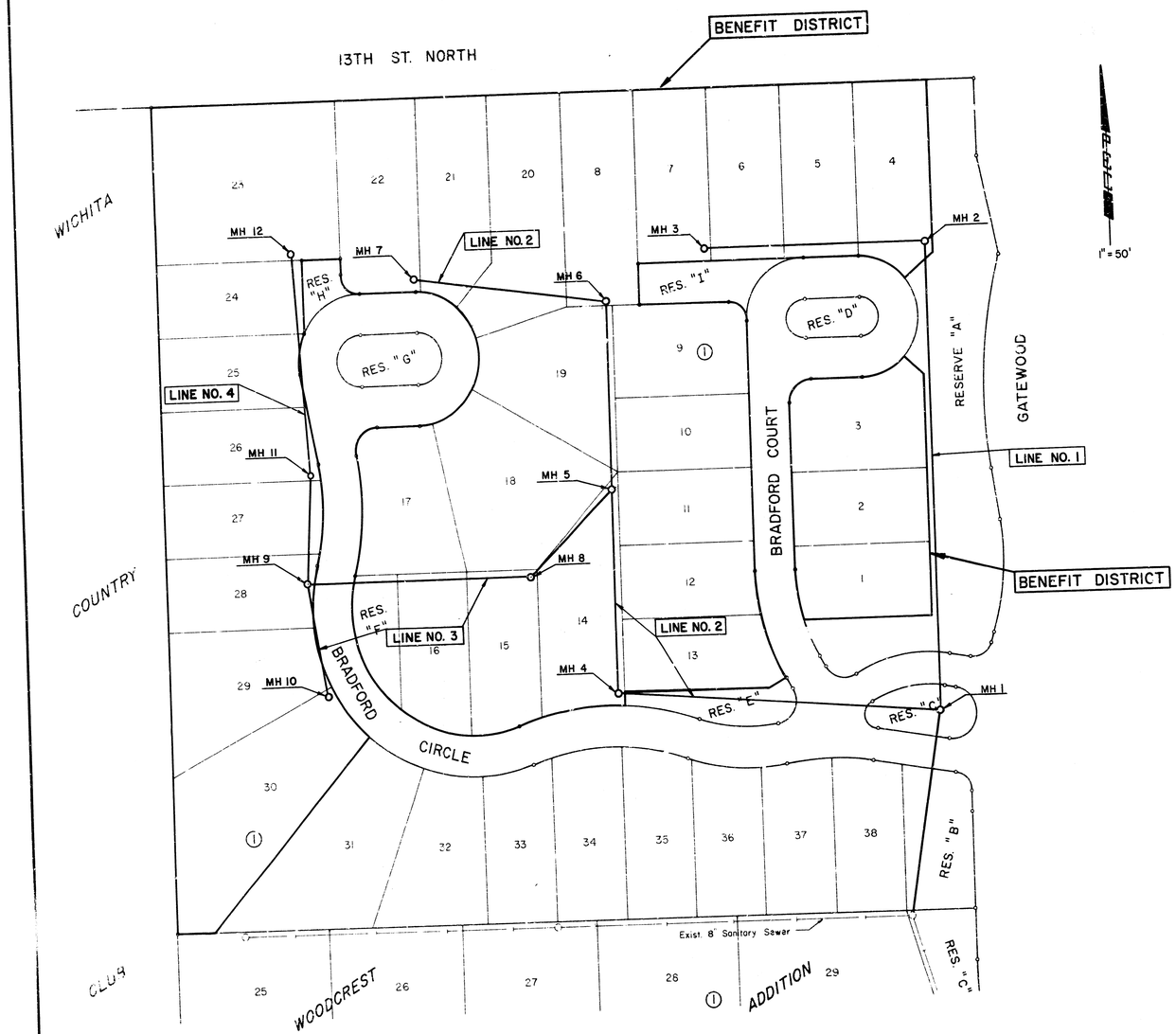

GENERAL NOTES

1. ALL CONSTRUCTION AND MATERIALS TO COMPLY WITH CITY OF WICHITA SPECIFICATIONS AND STANDARDS.
2. ALL ELEVATIONS SHOWN ARE CITY OF WICHITA DATUM (USGS–1187.4 = CITY DATUM).
3. THE CONTRACTOR SHALL LIMIT THE EXTENT OF TRENCH TO REMAIN OPEN OVERNIGHT AND WEEKENDS TO LESS THAN 50 FEET.
4. AT LEAST 48 HOURS PRIOR TO BEGINNING EXCAVATION, IF REQUIRED, (EXCLUDING WEEKENDS AND HOLIDAYS), THE CONTRACTOR SHALL CONTACT THE KANSAS ONE-CALL SYSTEM, A UTILITY LOCATION SERVICE, AT (316) 687-2470 TO REQUEST THE FOLLOWING UTILITY COMPANIES TO LOCATE ANY EXISTING LINES WITHIN THE PROJECT AREA: GAS SERVICE COMPANY, K.G. & E., THE WICHITA WATER DEPARTMENT, AIR CAPITAL CABLEVISION, AND THE TELEPHONE COMPANY.
5. UNDERGROUND UTILITY SERVICE LINES AND OVERHEAD UTILITY POLE LINES ARE TO BE ADJUSTED AS NECESSARY BY OTHER PRIOR TO CONSTRUCTION UNLESS THE PLANS SPECIFICALLY CALL FOR THEIR ADJUSTMENT BY THE CONTRACTOR OR UNLESS THE PLANS SPECIFICALLY IDENTIFY A UTILITY TO BE ADJUSTED BY ITS OWNER DURING CONSTRUCTION. EXISTING UTILITIES AND THEIR LOCATION, AS SHOWN ON THE PLANS, REPRESENT THE BEST INFORMATION OBTAINABLE FOR DESIGN. THE CONTRACTOR WILL BE REQUIRED TO WORK AROUND EXISTING UTILITIES WITHIN THE RIGHT-OF-WAY WHICH DO NOT CONFLICT WITH PROPOSED CONSTRUCTION.
6. THE CONTRACTOR SHALL BE RESPONSIBLE FOR PRESERVING PROPERTY IRONS. THE CONTRACTOR SHALL BE REQUIRED TO RE-ESTABLISH ANY PROPERTY IRONS WHICH ARE DAMAGED OR DESTROYED BY HIS CONSTRUCTION OPERATIONS. SUCH IRONS SHALL BE RE-ESTABLISHED BY A LICENSED LAND SURVEYOR IN ACCORDANCE WITH STATE LAWS. ALL COSTS FOR THIS WORK SHALL BE SUBSIDIARY TO THE OTHER ITEMS OF WORK.
7. CONTRACTOR SHALL PROVIDE POSITIVE DRAINAGE AWAY FROM ALL MANHOLE COVERS.
8. CONTRACTOR SHALL GRADE THE SANITARY SEWER ALIGNMENT TO THE PROFILE AND ELEVATIONS SHOWN ON THE EASEMENT GRADING PLAN TO THE EXTENT THAT DIRT GENERATED BY THIS PROJECT WILL ALLOW. THE CONTRACTOR SHALL NOT BE REQUIRED TO FURNISH ADDITIONAL DIRT TO ACCOMPLISH THIS GRADING. ALL COSTS FOR GRADING SHALL BE SUBSIDIARY TO THE PROJECT.
9. UNLESS OTHERWISE SPECIFIED ON THE PLANS, MANHOLES MAY BE TYPE "P", "C", OR "D" MANHOLES. MANHOLES SHALL BE CONSTRUCTED IN ACCORDANCE WITH THE STANDARD SPECIFICATIONS AND THE STANDARD DETAIL DRAWINGS.

RISER LOCATION TABLE

TEE SADDLE LOCATION					4" RISER PIPE
LINE NO.	STATION	BLOCK NO.	LOT NO.	DIRECTION	(L.F.)
2	2+78	1	13	RT.	6.5
2	3+30	1	12	RT.	6.5
2	3+87	1	11	RT.	6.5
2	4+43	1	10	RT.	5.0
2	4+48	1	19	LT.	5.5
2	5+00	1	9	RT.	3.0
2	5+00	1	14	LT.	6.0
3	0+30	1	18	RT.	6.0
3	0+35	1	15	LT.	5.0
3	1+09	1	16	LT.	5.5
3	1+57	1	17	RT.	3.5
3	1+62	1			

Bench Mark: RR spike in south face of power pole located at northeast corner of Gatewood and 13th Street North. Elev. = 199.29

Bench Mark: Chiseled "a" in back curb of P.C. on west side of Gatewood, approximately 35' south of the south property line or Bradford Place Addition. Elev. = 191.89

Bench Mark: RR spike in east face of 12" diameter hedge tree, WNW of the southwest corner of Bradford Place Addition. Elev. = 198.15

MICHAEL D. SCHOMAKER LICENSED 6778 KANSAS PROFESSIONAL ENGINEER

No.	Revision	By	Date

LATERAL 11, MAIN 24 OF THE
WAR INDUSTRIES SEWER

KEY MAP

MICHAEL E. LINDEBAK, P.E. - CITY ENGINEER
CITY OF WICHITA PROJECT NO. 468-76-245-81781-000-000-001

PROFESSIONAL ENGINEERING CONSULTANTS, P.A.
ENGINEERS
WICHITA, KANSAS

Designed by CRY, MDS | Job No. 34-8757G-E | Sht. 2 of 12
Drawn by GM | Date December 1987

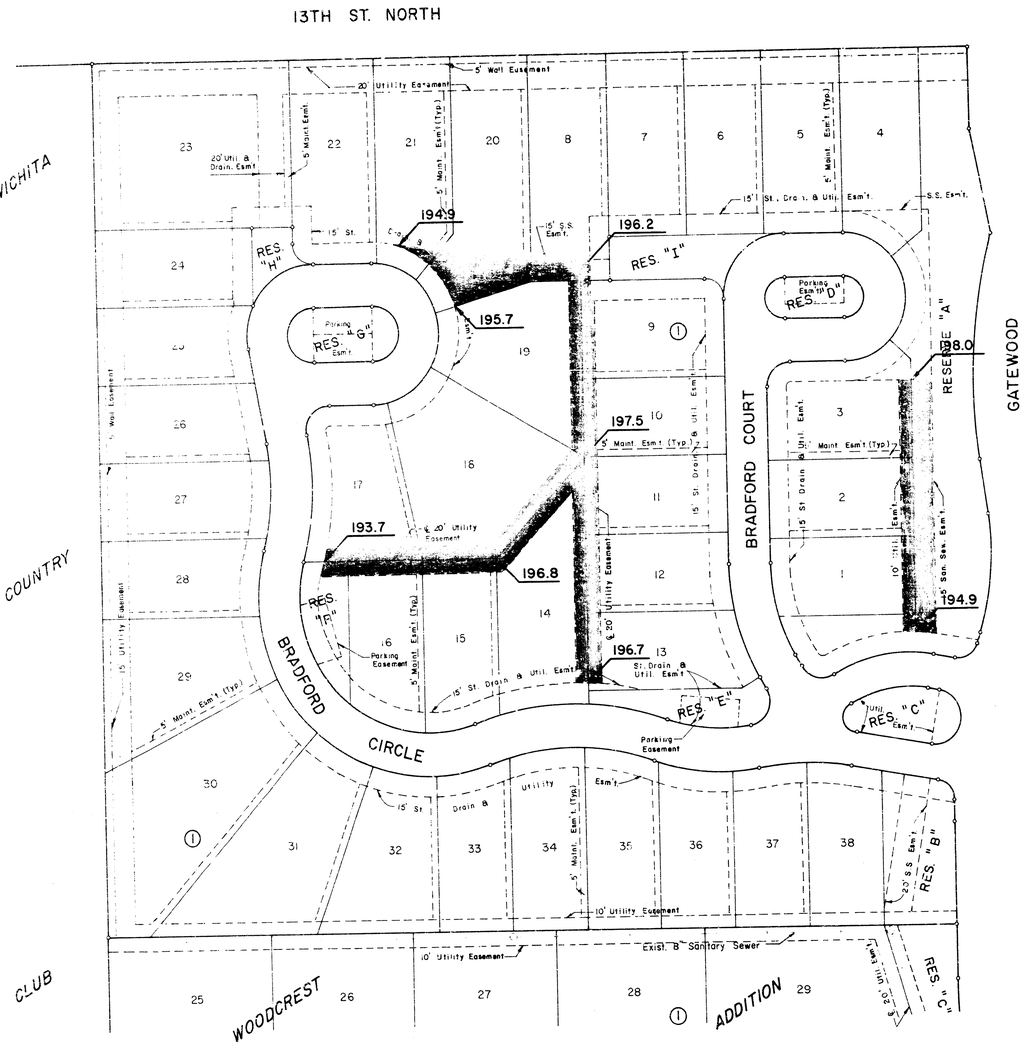

1"=50'

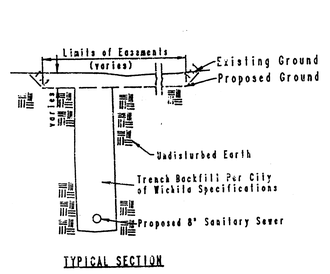

"CUT" SITUATIONS

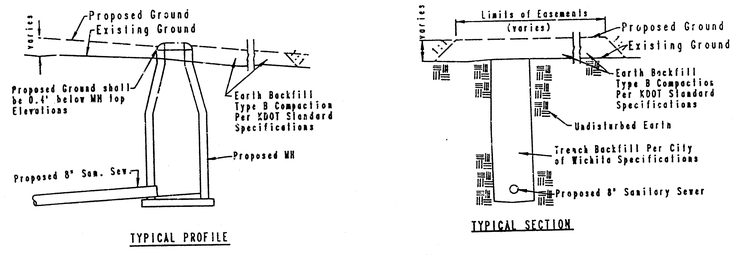

"FILL" SITUATIONS

EASEMENT GRADING

Limits of Area to be Graded

MICHAEL G. SCHOMAKER LICENSED 6778 KANSAS PROFESSIONAL ENGINEER

LATERAL II, MAIN 24 OF THE
WAR INDUSTRIES SEWER

EASEMENT GRADING

MICHAEL E. LINDEBAK, P.E. - CITY ENGINEER
CITY OF WICHITA PROJECT NO. 468-76-245-81/81-000-000-00

PROFESSIONAL ENGINEERING CONSULTANTS, P.A.
WICHITA, KANSAS

3/12

Designed by CRY, MDS	Job No. 34-8757G-2	Sht. 3 12
Drawn by GM	Date December 1987	

BRADFORD PLACE

AN ADDITION TO WICHITA, SEDGWICK COUNTY, KANSAS

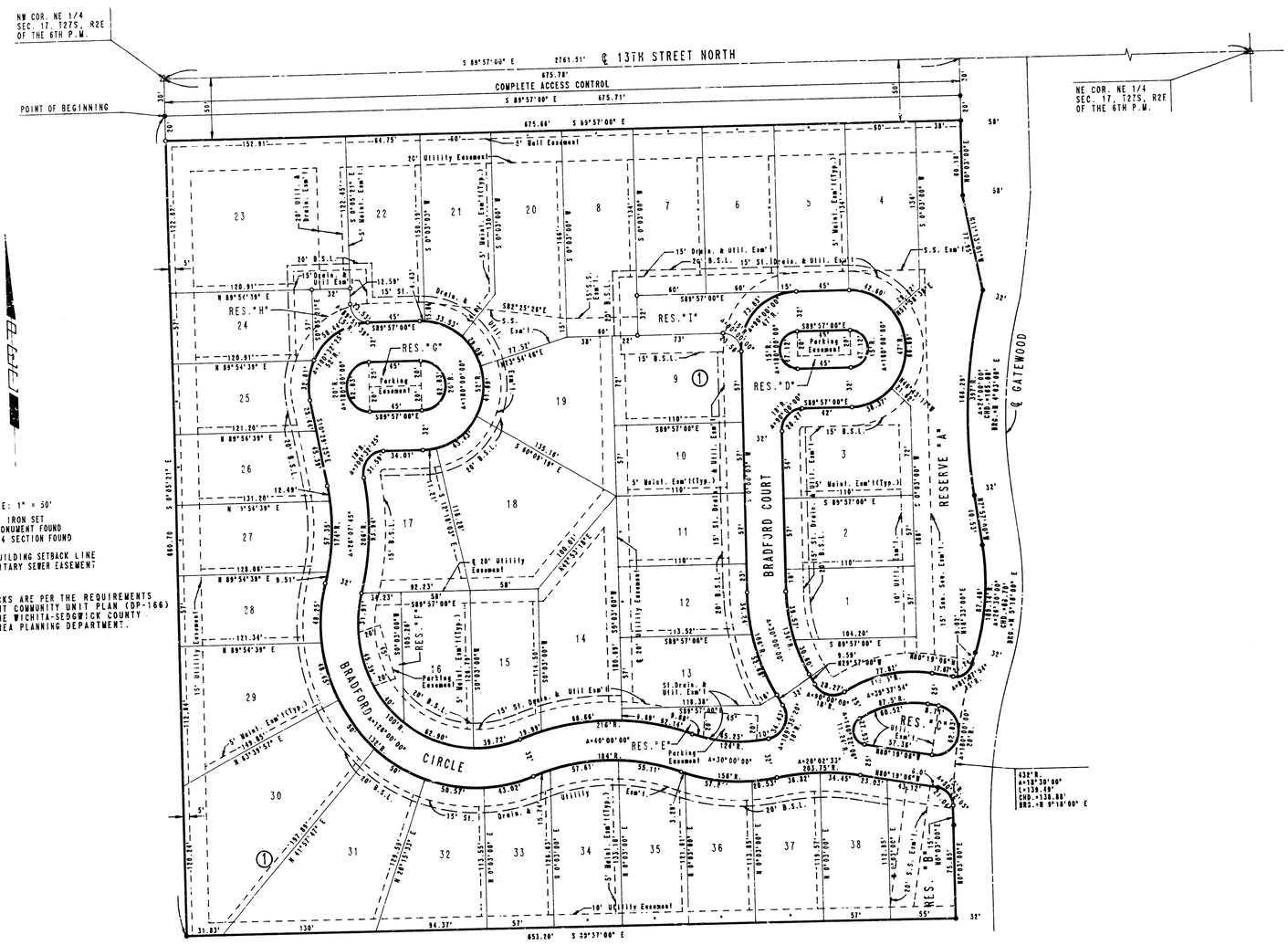

SCALE: 1" = 50'

○ = IRON SET
● = MONUMENT FOUND
△ = 1/4 SECTION FOUND

B.S.L.=BUILDING SETBACK LINE
S.S.=SANITARY SEWER EASEMENT

SIDEYARD SETBACKS ARE PER THE REQUIREMENTS OF THE LAKEPOINT COMMUNITY UNIT PLAN (DP-166) ON FILE WITH THE WICHITA-SEDGWICK COUNTY METROPOLITAN AREA PLANNING DEPARTMENT.

No.	Revision	By	Date

LATERAL 11, MAIN 24 OF THE
WAR INDUSTRIES SEWER

PLAT

MICHAEL E. LINDEBAK, P.E. - CITY ENGINEER
CITY OF WICHITA PROJECT NO. 468-76-245-81781-000-069-001

PROFESSIONAL ENGINEERING CONSULTANTS, P.A.
ENGINEERS
WICHITA, KANSAS

Designed by	Job No.	Sht. 4 of 12
Drawn by	Date	

PLAN — SURVEYED / PLOTTED / GRADES CHECKED / ALIGNMENT CHECKED / RT OF WAY CHECKED / NOTE BOOK / NO. / BY / DATE

PROFILE — SURVEYED / PLOTTED / GRADES CHECKED / ALIGNMENT CHECKED / NOTE BOOK / NO. / STRUCTURE NOT SHOWN / BY / DATE

Sta. 0+00.0
Exist. Concrete Manhole
Break into Exist. MH
and Install new 8" Pipe.
Grout water-tight
W/ non shrink grout. Reshape
MH floor to provide smooth
flow. ①

Sta. 1+59.5 .2
Construct MH-1
Outside Drop MH

Sta. 5+23.8
Construct MH-2
Standard MH

Sta. 7+03.3
Construct MH-3
Standard MH

Tp 'C'

LINE No.
See sheet no. 6

WOODCREST ADDITION

BRADFORD CIRCLE

BRADFORD

BRADFORD COURT

PLACE

C. 13TH STREET NORTH

GATEWOOD

CAUTION!!
Proposed 8" Water
(by others)

CAUTION!!
Buried Electric
and Telephone

Exist. 8" San. Sew.

Install 159.5 L.F.
8" Pipe

Install 363.8 L.F.
8" Pipe

Install 180.0 L.F.
8" Pipe

Install 1-4"
Stub and Plug

RES. "B"

RES. "C"

RES. "D"

RESERVE "A"

8" Conc. Walk

15' St. Drain & Util. Esm't

15' San. Sew. Esm't

10' Util. Esm't

20' Util. Esm't

5' Maint. Esm't (Typ.)

20' Util. Easement

5' Wall Esm't

Iron

O.L.P.

Elec. Bx.

10" Cedars

4" Oak

5" Pines

6" Pines

Elms & Pines

PSC

SCALE

PLAN: Lat. & Long. 0 40 80

PROFILE: Horiz. same as above
Vertical 5 0

MICHAEL D. SCHUMAKER LICENSED 6778 KANSAS PROFESSIONAL ENGINEER

LINE NO. 1

Proposed Ground (by others)

Existing Ground

Proposed Ground

Proposed Ground (by others)

Exist. MH Top Elev.=1133.93

MH-1 Top Elev.=1135.45

MH-2 Top Elev.=1138.35

MH-3 Top Elev.=1140.25

E IN=179.60 from LINE No. 2

E IN=189.30 from 1-4" Stub (NW)

E OUT=177.03
E IN=177.86

E OUT=179.90
E IN=179.77

E OUT=179.55
E IN=185.55

E=185.75

E=186.65

E=186.55

E OUT=187.08
E IN=187.23

E=187.55

E=187.23

153.5 L.F. 8" Pipe @ 1.20%

363.8 L.F. 8" Pipe @ 0.40%

180± L.F. 8" Pipe @ 0.40%

0+00 1+00 2+00 3+00 4+00 5+00 6+00 7+00

200 195 190 185 180 175

PLATE 1 PLAN PROFILE (F.H.A.N.K. STANDARD)

EUGENE DIETZGEN CO.

PROFESSIONAL ENGINEERING CONSULTANTS, P.A.
ENGINEERS
WICHITA, KANSAS

LATERAL II, MAIN 24 OF THE
WAR INDUSTRIES SEWER

MICHAEL E. LINDEBAK, P.E. CITY ENGINEER
CITY OF WICHITA PROJECT NO 468-76-243-8/81.-000-000.001

Designed by C.P.Y. MDS
Drawn by G.M. TLS
Job No. 34-87576-2
Date December, 1987

Sht. 5 of 12

5/12

Sta. 1+59.5, Line No. 1 = Sta. 0+00.0, Line No. 2
MH 1

Sta. 2+62.6
Construct MH 4
Standard MH
Tp 'C'

Sta. 4 ~~+20.7~~ +19.6
Construct MH 5
Standard MH
Tp 'C'

Sta. 5 ~~+67.4~~ +66.8
Construct MH 6
Standard MH
Tp 'C'

Sta. 7 ~~+26.8~~ +26.1
Construct MH 7
Standard MH
Tp 'C'

WOODCREST ADDITION

BRADFORD CIRCLE

BRADFORD PLACE

BRADFORD COURT

GATEWOOD

Line No. 1
See sheet no. 5

Line No. 3
See sheet no. 7

Install 157.8 L.F. 8" PVC Pipe

Install 262.9 L.F. 8" PVC Pipe

Install 140.7 L.F. 8" Pipe

Install 152.4 L.F. 8" Pipe

Install 1-4" Stub and Plug

RES. "C"

RES. "E"

RES. "G"

RES. "H"

RES. "I"

RESERVE "A"

133° 57' 58"

85° 07' 48"

180° 00' 00"

55°

SCALE

PLAN: Lat. & Long. 0 40 80

PROFILE: Horiz. same as above
Vertical 5 0

PLAN
SURVEYED
PLOTTED
GRADES CHECKED
ALIGN. & INTERSECTIONS LAID OUT
NO.
BY
DATE

PROFILE
SURVEYED
PLOTTED
GRADES CHECKED
ALIGN. & INTERSECTIONS LAID OUT
NO.
BY
DATE

LINE NO. 2

Proposed Ground (by others)

MH 1 Top Elev = 1635.45
MH 4 Top Elev = 1068.65
MH 5 Top Elev = 1078.62
MH 6 Top Elev = 1068.28
MH 7 Top Elev = 1044.65

E OUT = 1179.59
E IN = 1179.41

E = 179.99 .47

E = 180.50 .24

E OUT = 180.49 .40
E IN = 180.89 .43

E = 180.68 .62

E OUT = 181.08 .25
E IN = 183.26 .38

E = 183.76 .79

E OUT = 184.13 .13
E IN = 184.26 .28

E = 184.28 .39

E = 184.29 .74

E = 184.80 .83

E IN = 181.46
from Line No. 3

E IN = 185.21
from 1-4" Stub (N)

262.9 L.F. 8" PVC Pipe @ 0.30%

157.8 L.F. 8" PVC Pipe @ 0.30%

140.7 L.F. 8" Pipe @ 0.40%

155.5 L.F. 8" Pipe @ 0.40%

0+00 1+00 2+00 3+00 4+00 5+00 6+00 7+00

205 200 195 190 185 180 175

PLATE 1 PLAN PROFILE D P P & R E STANDARD

EUGENE DIETZGEN CO

PROFESSIONAL ENGINEERING CONSULTANTS, P.A.
ENGINEERS
WICHITA, KANSAS

Designed by CRY, MDS
Drawn by GM, TLS
Job No. 34-0757G-2
Date December 1987

Sht. 6 of 12

LATERAL II, MAIN 24 OF THE WAR INDUSTRIES SEWER

LINE NO. 2

MICHAEL E. LINDEBAK, P.E. CITY ENGINEER
CITY OF WICHITA PROJECT NO. 468-76-2.45-81781-000-000-001

MICHAEL D. SCHOMAKER LICENSED 8778 KANSAS PROFESSIONAL ENGINEER

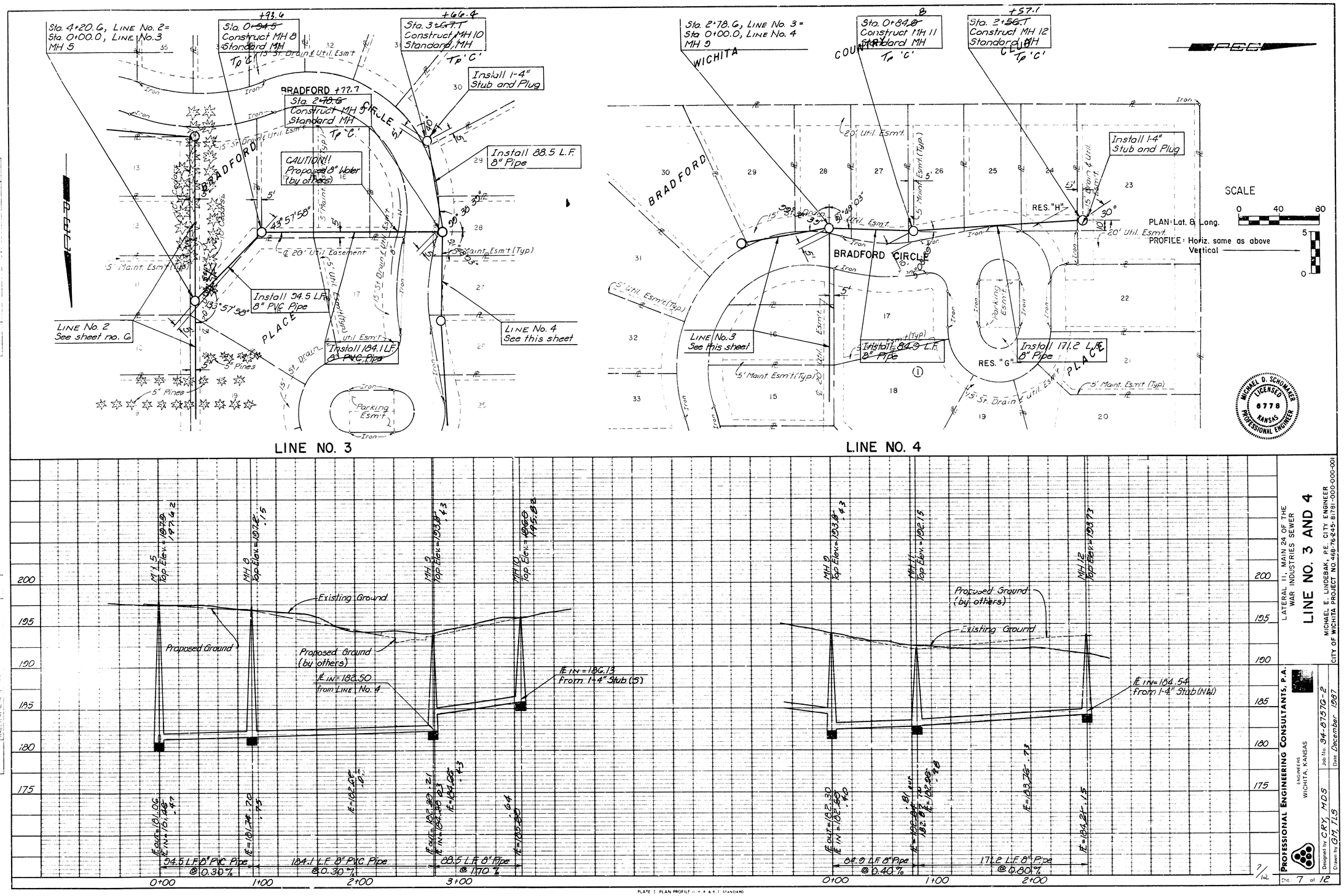

LATERAL 11, MAIN 24 OF THE WAR INDUSTRIES SEWER

LINE NO. 3 AND 4

MICHAEL E. LINDEBAK, P.E. CITY ENGINEER
CITY OF WICHITA PROJECT NO. 468-76-245-81781-000-000-001

PROFESSIONAL ENGINEERING CONSULTANTS, P.A.
ENGINEERS
WICHITA, KANSAS

Designed by CRY, MDS
Drawn by GM, TLS
Job No. 34-87576-2
Date December 1987

Sht. 7 of 12

PLATE 1 PLAN PROFILE

SEWER APPURTENANCES DETAILS

ADOPTED AS STANDARD DESIGN BY

CITY OF WICHITA, KANSAS

TYPE "D" MANHOLE

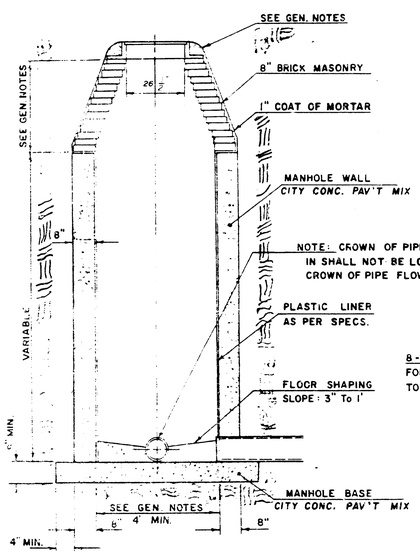

TYPE "D" INSIDE DROP MANHOLE

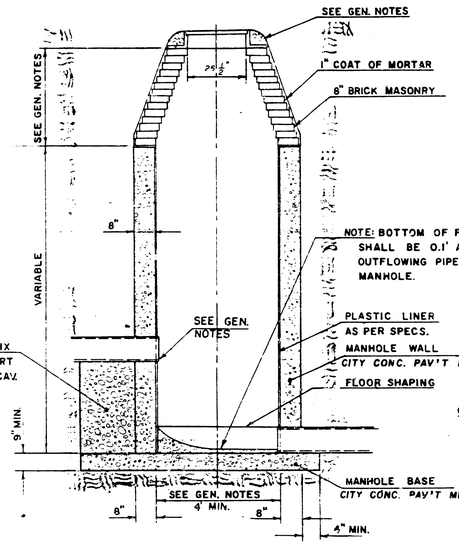

TYPE "D" OUTSIDE DROP MANHOLE

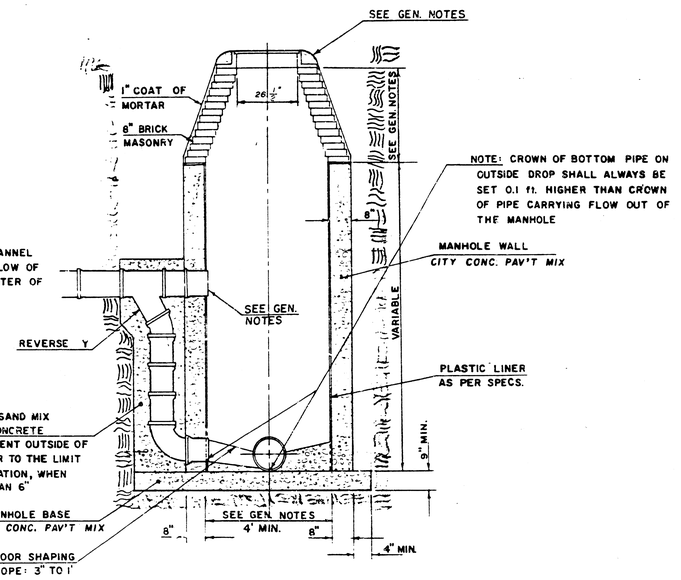

GENERAL NOTES

1. MORTAR USED IN MASONRY CONSTRUCTION SHALL CONTAIN 8 SACKS OF CEMENT PER CUBIC YARD. CONCRETE USED IN MANHOLE WALLS AND BASES SHALL CONFORM TO THE REQUIREMENTS OF CONCRETE FOR CONCRETE PAVEMENT CONSTRUCTION AS SPECIFIED IN THE CITY STANDARD PAVING SPECIFICATIONS USING CITY CONCRETE PAVEMENT MIX WITHOUT AIR ENTRAINING ADMIXTURE. MORTAR SHALL BE PLACED AROUND THE MANHOLE RING AS SHOWN ON THE DRAWINGS WHEN MANHOLES ARE CONSTRUCTED IN UNPAVED AREAS. PLASTIC LINING INSIDE THE MANHOLE SHALL CONFORM TO THE REQUIREMENTS SPECIFIED IN THE STANDARD SPECIFICATIONS FOR PLASTIC LINING FOR REINFORCED CONCRETE PIPE FOR SANITARY SEWER CONSTRUCTION. ALL INSIDE SURFACES OF THE MANHOLE WALL WHICH WOULD BE EXPOSED TO SEWER GAS SHALL BE PROTECTED BY THE PLASTIC LINING. TYPE "D" MANHOLES MAY BE USED ON PIPE SIZES 10" TO 36" WHEN THE MANHOLE DEPTH EXCEEDS THE REQUIRED CORBEL HEIGHT BY 1' PLUS THE OUTSIDE DIAMETER OF THE LARGEST PIPE IN THE MANHOLE. MANHOLES CONSTRUCTED WHERE PIPE SIZES ARE SMALLER THAN 24" SHALL HAVE A DIAMETER OF 4'. MANHOLES CONSTRUCTED WHERE THE PIPE SIZES ARE 24" OR LARGER SHALL HAVE A DIAMETER OF 5'. THE HEIGHT OF THE CORBELS ON 4' DIAMETER MANHOLES SHALL BE 4' MANHOLES HAVING A DIAMETER OF 5' SHALL HAVE CORBELS 6' IN HEIGHT. COMPLETED MANHOLE SHALL BE WITHOUT LEAKS AND WATER TIGHT.

2. REINFORCING STEEL SHALL BE INSTALLED IN THE MANHOLE BASE. REINFORCING STEEL SHALL CONSIST OF NO. 4 BARS PLACED ON 6" CENTERS IN BOTH DIRECTIONS. REINFORCING STEEL SHALL BE PLACED 6" ABOVE THE BOTTOM OF THE MANHOLE BASE. COST OF FURNISHING AND INSTALLING REINFORCING STEEL SHALL BE INCLUDED IN THE UNIT PRICE BID FOR THE MANHOLE.

3. AN OPENING SHALL BE CUT IN THE MANHOLE WALL FOR THE UPPER INLET PIPE FOR INSIDE AND OUTSIDE DROP MANHOLES. THE UPPER INLET PIPE SHALL BE GROUTED INTO THIS OPENING WITH NON-SHRINK GROUT. THE EXTERIOR OF THIS COMPLETED CONNECTION SHALL BE SEALED WITH AN APPROVED BITUMINOUS COATING SUCH THAT THE CONNECTION WILL BE WATER TIGHT. THE INTERIOR PLASTIC LINING SHALL BE SEALED AROUND THE INLET PIPE OPENING IN SUCH A MANNER THAT WILL EFFECTIVELY MAINTAIN THE INTEGRITY OF THE PROTECTIVE PLASTIC LINER.

4. THE FLOORS OF ALL MANHOLES SHALL BE SHAPED WITH FLOW CHANNELS SUCH THAT THE MANHOLES WILL BE SELF CLEANING AND FREE OF AREAS WHERE SOLIDS COULD BE DEPOSITED AS SEWAGE FLOWS THROUGH THE MANHOLE FROM THE INLET PIPES TO THE OUTLET PIPE. FLOW CHANNELS SHALL BE FORMED TO MATCH THE BOTTOM HALVES OF THE INFLOWING PIPES AND THE OUTFLOWING PIPE AS SHOWN BY THE DRAWINGS EXCEPT FOR INSIDE DROP MANHOLES. FLOW CHANNELS FOR INSIDE DROP MANHOLES SHALL BE CONSTRUCTED AS INDICATED BY THE DRAWING. MANHOLE FLOORS SHALL HAVE SLOPES OF 3 INCHES PER FOOT IN THE AREAS OUTSIDE OF THE FLOW CHANNELS SLOPED TOWARD THE FLOW CHANNELS. PIPES LAID THROUGH MANHOLES SHALL HAVE THE TOP HALF REMOVED TO NEAT LINES FOR THE FULL INSIDE DIAMETER OF THE MANHOLE. MANHOLE FLOORS SHALL THEN BE SHAPED AROUND THE BOTTOM HALF OF THE PIPE WHICH FORMS THE FLOW CHANNEL.

5. PIPES INSTALLED WITHIN THE EXCAVATION MADE FOR THE MANHOLE SHALL BE CRADLED WITH CONCRETE TO THE LIMITS OF THE MANHOLE EXCAVATION. WHEN CLAY PIPE IS USED, THE CRADLE SHALL EXTEND TO THE FIRST JOINT OUTSIDE THE MANHOLE. THE CRADLE SHALL BE TERMINATED AT THE CLAY PIPE JOINT IN A MANNER WHICH WILL MAINTAIN THE FLEXIBILITY OF THE JOINT. COST OF CRADLE WITHIN MANHOLE EXCAVATION OR TO CLAY PIPE JOINTS ADJACENT TO MANHOLE SHALL BE INCLUDED IN THE UNIT PRICE BID FOR THE MANHOLE.

6. MANHOLE COVER CASTINGS AND MANHOLE FRAME CASTINGS SHALL CONFORM TO THE REQUIREMENTS AS INDICATED IN THE STANDARD SPECIFICATIONS AND AS SHOWN IN THE STANDARD DETAIL DRAWING.

7. THE VERTICAL DROP IN INSIDE DROP MANHOLES SHALL NOT EXCEED 4' FOR INFLOWING PIPES SIZED 12" OR SMALLER AND 2' FOR INFLOWING PIPES LARGER THAN 12". THE CROWNS OF INFLOWING PIPES SHALL NEVER BE SET LOWER THAN THE CROWN OF THE OUTFLOWING PIPE.

8. STANDARD MANHOLES TYPE "D" AND STANDARD INSIDE DROP MANHOLES TYPE "D" SHALL BE BID AS STANDARD MANHOLES FOR THE TYPE AND DIAMETER INDICATED. OUTSIDE DROP MANHOLES TYPE "D" SHALL BE BID AS STANDARD OUTSIDE DROP MANHOLES FOR THE TYPE AND DIAMETER INDICATED. ALL MANHOLE DIAMETERS WILL BE 4' UNLESS INDICATED OTHERWISE.

REVISED JAN. 1982 8/12

JUNE, 1980

SEWER APPURTENANCES DETAILS
ADOPTED AS STANDARD DESIGN
BY
CITY OF WICHITA

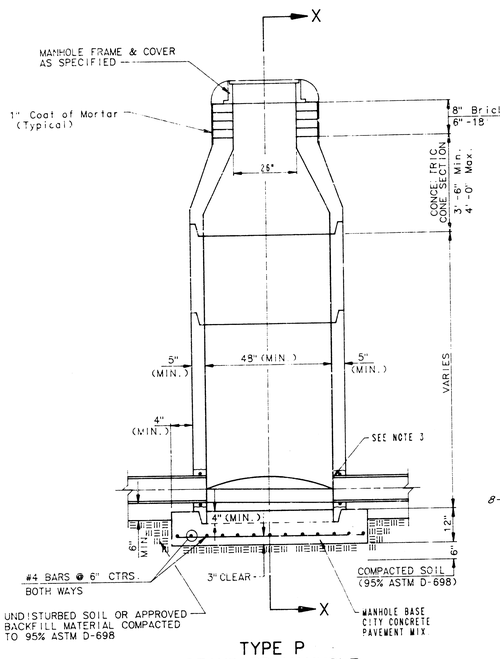

TYPE P
STANDARD MANHOLE

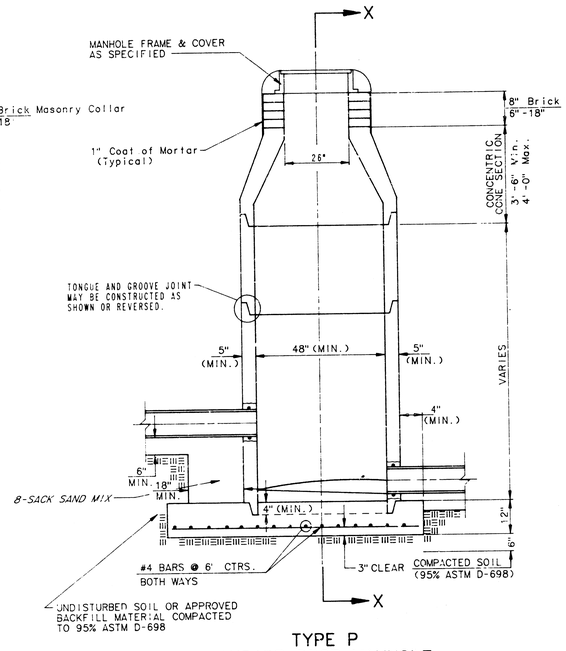

TYPE P
INSIDE DROP MANHOLE

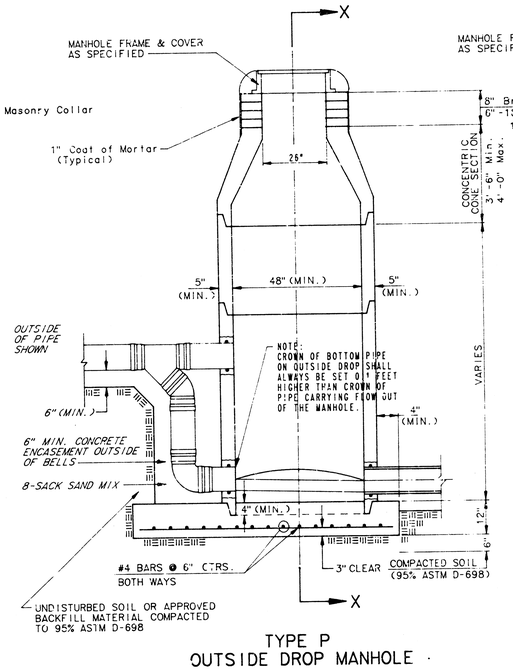

TYPE P
OUTSIDE DROP MANHOLE

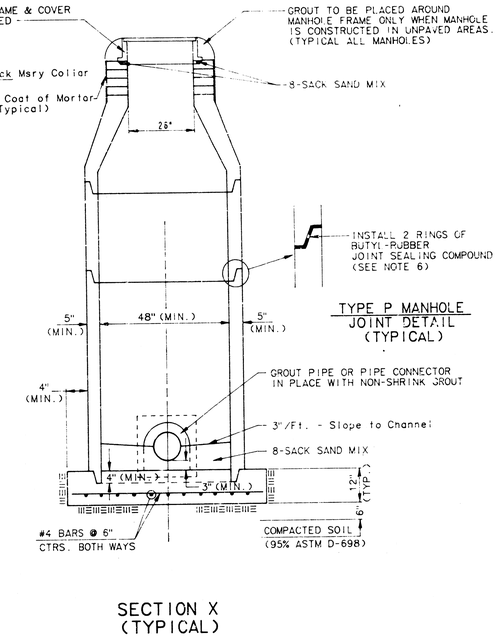

TYPE P MANHOLE
JOINT DETAIL
(TYPICAL)

SECTION X
(TYPICAL)

GENERAL NOTES

PRECAST MANHOLE NOTES

1. ALL PRECAST CONCRETE MANHOLE SECTIONS SHALL CONFORM TO THE LATEST REVISION OF A.S.T.M. C478 AS MODIFIED BY THE SPECIFICATIONS.
2. NON-SHRINK GROUT SHALL BE NON-METALLIC TYPE.
3. APPROVED FLEXIBLE WATERSTOP GASKETS SHALL BE INSTALLED TO JOIN THE SEWER TO THE MANHOLE WALL WHEN A.B.S. COMPOSITE PIPE OR P.V.C. PIPE IS USED. FOR OTHER TYPES OF PIPE THE SEWER SHALL BE GROUTED IN PLACE WITH NON-SHRINK GROUT. THE SEWER PIPE SHALL BE SUPPORTED WITH CONCRETE ENCASEMENT A MINIMUM OF 3 FEET FROM THE MANHOLE WALL AND TO THE FIRST JOINT FOR V.C.P. SUCH THAT THE JOINT REMAINS FLEXIBLE.
4. ALL INSIDE SURFACES OF THE CONCRETE MANHOLE WHICH WOULD BE EXPOSED TO SEWER GAS SHALL BE COATED WITH 2 COATS TNEMEC SERIES 66 HI-BUILD EPOXOLINE, DRY THICKNESS OF 8 MILS (MIN.)
5. EXTERIOR MANHOLE WALLS SHALL BE COATED WITH 1 COAT MOBILARMA 633 BITUMINUS COATING.
6. JOINT SEALING COMPOUND SHALL BE KENT SEAL NO. 2 OR APPROVED EQUAL.
7. PRECAST MANHOLES SHALL BE SET AT LEAST 4 INCHES INTO THE MANHOLE BASE.
8. TOP OF MANHOLE FLOOR SLAB SHALL BE AT LEAST 3 INCHES BELOW THE FLOW LINE OF THE OUTLET PIPE TO INSURE SUFFICIENT MINIMUM THICKNESS OF SHAPED INVERT.
9. LIFTING HOLES SHALL BE FILLED WITH NON-SHRINK GROUT AND THE INTERIOR SURFACE COATED AS SPECIFIED.
10. MORTAR USED IN MASONRY CONSTRUCTION SHALL CONTAIN 6 SACKS OF CEMENT PER CUBIC YARD. CONCRETE USED IN MANHOLE BASES SHALL CONFORM TO THE REQUIREMENTS OF CONCRETE FOR CONCRETE PAVEMENT CONSTRUCTION AS SPECIFIED IN THE CITY STANDARD PAVING SPECIFICATIONS USING CITY CONCRETE PAVEMENT MIX WITHOUT AIR ENTRAINING ADMIXTURE. MORTAR SHALL BE PLACED AROUND THE MANHOLE RING AS SHOWN ON THE DRAWINGS WHEN MANHOLES ARE CONSTRUCTED IN UNPAVED AREAS. MANHOLES CONSTRUCTED WHERE PIPE SIZES ARE SMALLER THAN 24" SHALL HAVE AN INSIDE DIAMETER OF 4'. MANHOLES CONSTRUCTED WHERE PIPE SIZES ARE 24" OR LARGER SHALL HAVE AN INSIDE DIAMETER OF 5'. COMPLETED MANHOLE SHALL BE WITHOUT LEAKS AND WATER TIGHT.
11. REINFORCING STEEL SHALL BE INSTALLED IN THE MANHOLE BASES AND SHALL CONSIST OF NO. 4 BARS PLACED ON 6" CENTERS IN BOTH DIRECTIONS. THE MANHOLE BASE REINFORCEMENT SHALL BE PLACED AT LEAST 3" ABOVE THE BOTTOM OF THE MANHOLE BASE. ALL COSTS FOR FURNISHING AND INSTALLING REINFORCING STEEL SHALL BE INCLUDED IN THE UNIT PRICE BID FOR THE MANHOLE.
12. OPENINGS SHALL BE CUT INTO THE MANHOLE WALL WHEN OUTSIDE DROPS ARE CONSTRUCTED ON EXISTING MANHOLES. SUCH OPENINGS CUT INTO EXISTING MANHOLES SHALL BE AS SMALL AS PRACTICAL TO FACILITATE INSTALLING AND GROUTING THE NEW PIPE IN PLACE. WATERSTOP GASKETS SHALL BE USED WITH P.V.C. AND A.B.S. COMPOSITE PIPE. THE NEW PIPE SHALL BE GROUTED INTO THE OPENING USING AN APPROVED NONSHRINK GROUT FOR THE FULL MANHOLE WALL THICKNESS. THE EXTERIOR OF THE COMPLETED CONNECTION SHALL BE SEALED WITH AN APPROVED BITUMINOUS COATING SUCH THAT THE CONNECTION WILL BE WATER TIGHT. FLOOR OF MANHOLE SHALL BE MODIFIED TO FORM NEW FLOW CHANNEL FOR THE NEW CONNECTION AS INDICATED BY THE DRAWING. THIS WORK, INCLUDING MODIFICATION OF MANHOLE FLOOR, SHALL BE PAID FOR AT THE UNIT PRICE BID FOR OUTSIDE DROP STACK CONSTRUCTED ON EXISTING MANHOLE.
13. THE FLOORS OF ALL MANHOLES SHALL BE SHAPED WITH FLOW CHANNELS SUCH THAT THE MANHOLES WILL BE SELF CLEANING AND FREE OF AREAS WHERE SOLIDS COULD BE DEPOSITED AS SEWAGE FLOWS THROUGH THE MANHOLE FROM ALL INLET PIPES TO THE OUTLET PIPE. FLOW CHANNELS SHALL BE FORMED TO MATCH THE BOTTOM HALVES OF THE INFLOWING PIPES AND THE OUTFLOWING PIPE AS SHOWN BY THE DRAWINGS EXCEPT FOR INSIDE DROP MANHOLES. FLOW CHANNELS FOR INSIDE DROP MANHOLES SHALL BE CONSTRUCTED AS INDICATED BY THE DRAWING. MANHOLE FLOORS SHALL HAVE SLOPES OF 3 INCHES PER FOOT IN THE AREAS OUTSIDE OF THE FLOW CHANNELS SLOPED TOWARD THE FLOW CHANNELS. PIPES LAID THROUGH MANHOLES SHALL HAVE THE TOP HALF REMOVED TO NEAT LINES FOR THE FULL INSIDE DIAMETER OF THE MANHOLE. MANHOLE FLOORS SHALL THEN BE SHAPED AROUND THE BOTTOM HALF OF THE PIPE WHICH FORMS THE FLOW CHANNEL.
14. PIPES INSTALLED WITHIN THE EXCAVATION MADE FOR THE MANHOLE SHALL BE CRADLED WITH CONCRETE TO THE LIMITS OF THE MANHOLE EXCAVATION. WHEN CLAY PIPE IS USED, THE CRADLE SHALL EXTEND TO THE FIRST JOINT OUTSIDE THE MANHOLE. THE CRADLE SHALL BE TERMINATED AT THE CLAY PIPE JOINT IN A MANNER WHICH WILL MAINTAIN THE FLEXIBILITY OF THE JOINT. COST OF CRADLE WITHIN MANHOLE EXCAVATION OR TO CLAY PIPE JOINTS ADJACENT TO MANHOLE SHALL BE INCLUDED IN THE UNIT PRICE BID FOR THE MANHOLE.
15. MANHOLE COVER CASTINGS AND MANHOLE FRAME CASTINGS SHALL CONFORM TO THE REQUIREMENTS AS INDICATED IN THE STANDARD SPECIFICATIONS AND AS SHOWN IN THE STANDARD DETAIL DRAWING.
16. THE VERTICAL DROP IN INSIDE DROP MANHOLES SHALL NOT EXCEED 4' FOR INFLOWING PIPES SIZED 12" OR SMALLER AND 2' FOR INFLOWING PIPES LARGER THAN 12". THE CROWNS OF INFLOWING PIPES SHALL NEVER BE SET LOWER THAN THE CROWN OF THE OUTFLOWING PIPE.
17. STANDARD MANHOLES AND STANDARD INSIDE DROP MANHOLES SHALL BE BID AS STANDARD MANHOLES FOR THE TYPE AND DIAMETER INDICATED. OUTSIDE DROP MANHOLES SHALL BE BID AS STANDARD OUTSIDE DROP MANHOLES FOR THE TYPE AND DIAMETER INDICATED. ALL MANHOLE DIAMETERS WILL BE 4' UNLESS INDICATED OTHERWISE.
18. A BRICK MASONRY COLLAR SHALL BE INSTALLED BETWEEN THE CAST IRON FRAME AND THE CONCENTRIC CONE. THE COLLAR WILL HAVE 8" WALLS AND A VERTICAL HEIGHT OF 6" MINIMUM AND 18" MAXIMUM. A 1" COAT OF MORTAR WILL BE PLASTERED ON THE OUTSIDE OF THE COLLAR.

9/12

Sht. 9 of 12

Revised: June 12, 1996

SEWER APPURTENANCES DETAILS

ADOPTED AS STANDARD DESIGN
BY

City of Wichita, Kansas

STANDARD MANHOLE TYPE "C"

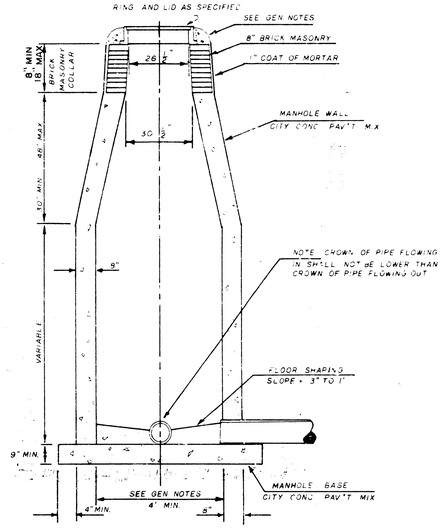

INSIDE DROP MANHOLE TYPE "C"

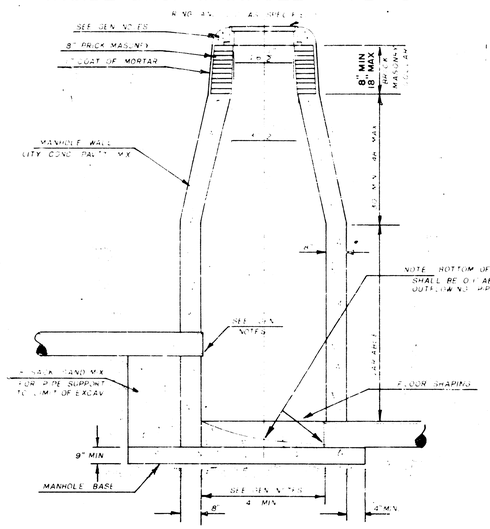

CUTSIDE DROP MANHOLE TYPE "C"

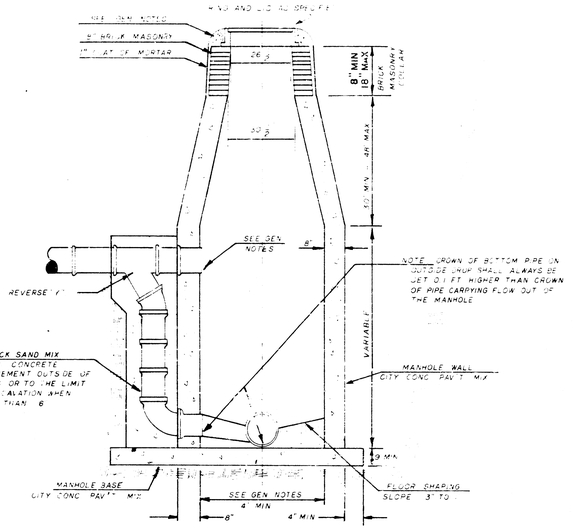

GENERAL NOTES

1. MORTAR USED IN MASONRY CONSTRUCTION SHALL CONTAIN 6 SACKS OF CEMENT PER CUBIC YARD. CONCRETE USED IN MANHOLE WALLS AND BASES SHALL CONFORM TO THE REQUIREMENTS OF CONCRETE FOR CONCRETE PAVEMENT CONSTRUCTION AS SPECIFIED IN THE CITY STANDARD PAVING SPECIFICATIONS USING CITY CONCRETE PAVEMENT MIX WITHOUT AIR ENTRAINING ADMIXTURE. MORTAR SHALL BE PLACED AROUND THE MANHOLE RING AS SHOWN ON THE DRAWINGS WHEN MANHOLES ARE CONSTRUCTED IN UNPAVED AREAS. TYPE "C" MANHOLES CAN BE CONSTRUCTED ONLY WHERE PIPE SIZES ARE 8" OR SMALLER. THE INSIDE DIAMETER OF TYPE "C" MANHOLES SHALL BE 4'. COMPLETED MANHOLE SHALL BE WITHOUT LEAKS AND WATER TIGHT.

2. REINFORCING STEEL SHALL BE INSTALLED IN THE MANHOLE BASE. REINFORCING STEEL SHALL CONSIST OF NO. 4 BARS PLACED ON 6" CENTERS IN BOTH DIRECTIONS. REINFORCING STEEL SHALL BE PLACED 6" ABOVE THE BOTTOM OF THE MANHOLE BASE. COST OF FURNISHING AND INSTALLING REINFORCING STEEL SHALL BE INCLUDED IN THE UNIT PRICE BID FOR THE MANHOLE.

3. AN OPENING SHALL BE CUT IN THE MANHOLE WALL FOR THE UPPER INLET PIPE FOR INSIDE AND OUTSIDE DROP MANHOLES. THE UPPER INLET PIPE SHALL BE GROUTED INTO THIS OPENING WITH NON-SHRINK GROUT. THE EXTERIOR OF THE COMPLETED CONNECTION SHALL BE SEALED WITH AN APPROVED BITUMINOUS COATING SUCH THAT THE CONNECTION WILL BE WATER TIGHT.

4. THE FLOOR OF ALL MANHOLES SHALL BE SHAPED WITH FLOW CHANNELS SUCH THAT THE MAIN SEWER WILL BE SELF CLEANING, AND FREE OF AREAS WHERE SOLIDS SHALL BE DEPOSITED AS LEAVE FLOWS THROUGH THE MANHOLE FROM ALL INLET PIPES TO THE OUTLET PIPE. FLOW CHANNELS SHALL BE FORMED TO HEIGHT OF THE TOP HALF OF THE INFLOWING PIPES AND THE OUTFLOWING PIPE AS SHOWN ON THE DRAWINGS EXCEPT FOR INSIDE DROP MANHOLES. FLOW CHANNELS IN INSIDE DROP MANHOLES SHALL BE CONSTRUCTED AS INDICATED ON THE DRAWING. MANHOLE FLOORS SHALL HAVE SLOPES OF 3 INCHES PER FOOT IN THE AREAS OUTSIDE OF THE FLOW CHANNELS SLOPED TOWARD THE FLOW CHANNELS. PIPES LAID THROUGH MANHOLE SHALL HAVE THE TOP HALF REMOVED TO NEAT LINES FOR THE FULL INSIDE DIAMETER OF THE MANHOLE. MANHOLE FLOORS SHALL THEN BE SHAPED AROUND THE BOTTOM HALF OF THE PIPE WHICH FORMS THE FLOW CHANNEL.

5. PIPES INSTALLED WITHIN THE EXCAVATION MADE FOR THE MANHOLE SHALL BE INSTALLED WITH CONCRETE TO THE LIMITS OF THE MANHOLE EXCAVATION. WHEN CLAY PIPE IS USED, THE CRADLE SHALL EXTEND TO THE FIRST JOINT OUTSIDE THE MANHOLE. THE CRADLE SHALL BE TERMINATED AT THE CLAY PIPE JOINT IN A MANNER WHICH WILL MAINTAIN THE FLEXIBILITY OF THE JOINT. COST OF CRADLE WITHIN MANHOLE EXCAVATION OR TO CLAY PIPE JOINT, WHICHEVER IS ADJACENT TO MANHOLE SHALL BE INCLUDED IN THE UNIT PRICE BID FOR THE MANHOLE.

6. MANHOLE COVER RATING AND MANHOLE FRAME SETTING HEIGHT SHALL CONFORM TO THE REQUIREMENTS AS INDICATED IN THE STANDARD SPECIFICATIONS AND AS SHOWN IN THE STANDARD DETAIL DRAWING.

7. THE VERTICAL DROP IN INSIDE DROP MANHOLES SHALL NOT BE LESS THAN 2' FOR INFLOWING PIPES 12" DIA OR SMALLER AND 3' FOR INFLOWING PIPES LARGER THAN 12". THE ELEVATION OF INFLOWING PIPE SHALL NOT BE LOWER THAN THE CROWN OF THE OUTFLOWING PIPE.

8. STANDARD MANHOLE TYPE "C" AND STANDARD INSIDE DROP MANHOLE TYPE "C" SHALL BE USED TO STANDARD MANHOLES FOR THE TYPE AND DIAMETER INDICATED. OUTSIDE DROP MANHOLES TYPE "C" SHALL BE USED TO STANDARD INSIDE DROP MANHOLES FOR THE TYPE AND DIAMETER INDICATED. ALL MANHOLE DIAMETERS WITH BE 4' UNLESS INDICATED OTHERWISE.

MANHOLE FRAME AND COVER DETAIL

ADOPTED AS STANDARD DESIGN

BY

City of Wichita, Kansas

MANHOLE COVER

Weight: 180 Lbs.

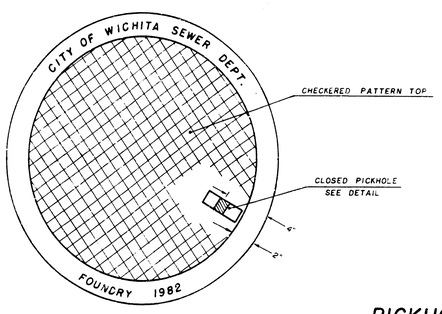

TOP VIEW

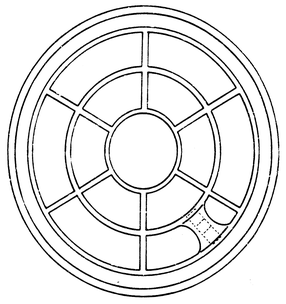

BOTTOM VIEW

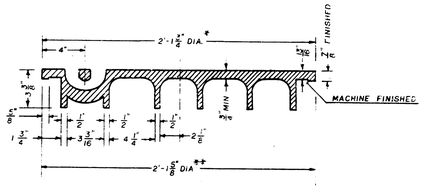

SECTION VIEW

* OUTSIDE DIA TOP OF COVER

** OUTSIDE DIA BOTTOM OF COVER

PICKHOLE DETAIL

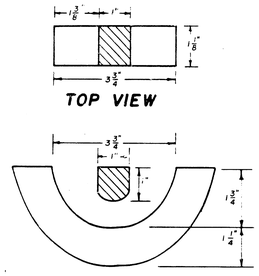

TOP VIEW

SECTION VIEW

MANHOLE FRAME

Weight: 240 Lbs.

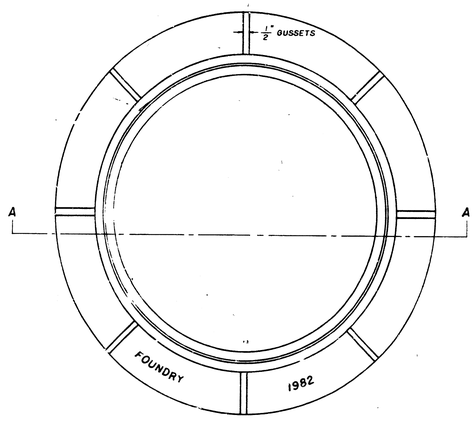

TOP VIEW

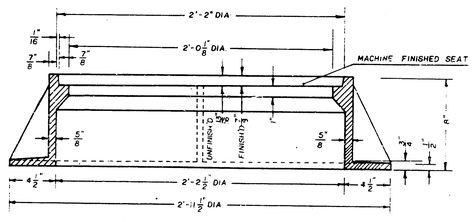

SECTION A-A

GENERAL NOTES

1. MANHOLE CASTINGS SHALL BE MANUFACTURED USING GOOD QUALITY GRAY IRON CONFORMING TO CLASS 30 OF A.S.T.M. DESIGNATION A-48. DIMENSIONS AND WEIGHTS SHOWN ON THE DETAILED DRAWINGS SHALL BE CONSIDERED AS MINIMUM REQUIREMENTS AND ANY DEVIATIONS FROM THE DIMENSIONS SHOWN MUST BE SPECIFICALLY APPROVED. THE FINISHED CASTINGS SHALL BE OF UNIFORM QUALITY, FREE FROM BLOWHOLES, POROSITY, HARD SPOTS, SHRINKAGE DISTORTIONS OR OTHER DEFECTS.

2. MANHOLE CASTINGS SHALL BE COATED WITH AN ASPHALT PAINT RESULTING IN A SMOOTH, TOUGH AND TENACIOUS COATING WHICH IS NOT BRITTLE OR TACKY.

3. MANHOLE CASTINGS SHALL BE MANUFACTURED SUCH THAT A COVER MANUFACTURED BY ANY ONE FOUNDRY WILL FIT INTERCHANGEABLY INTO A FRAME MANUFACTURED BY ANOTHER FOUNDRY AND STILL MEET ALLOWABLE CLEARANCES AND NON-ROCKING REQUIREMENTS. THIS WILL REQUIRE MANUFACTURING OF THE MATCHING FACES ON THE COVER AND THE FRAME TO CLOSE TOLERANCES.

4. THE OUTSIDE CIRCUMFERENCE OF THE VERTICAL FACE OF THE COVER AND THE INSIDE CIRCUMFERENCE OF THE VERTICAL FACE IN THE FRAME RECESS SHALL BE MANUFACTURED TO TOLERANCES SUCH THAT THE CLEARANCE BETWEEN THE COVER AND FRAME WILL NOT EXCEED 1/8" AT ANY POINT AROUND THE CIRCUMFERENCE OF THE COVER. THE SEATING SURFACES BETWEEN THE COVER AND FRAME SHALL BE MACHINED SUCH THAT THESE SURFACES SHALL MAKE FULL CONTACT FOR THEIR FULL CIRCUMFERENCE TO PRECLUDE THE COVER FROM ROCKING IN THE FRAME.

5. THE MANHOLE FRAME AND COVER SHALL BE MARKED WITH LETTERING INDICATING THE NAME OF THE MANUFACTURER AND THE YEAR WHEN THE COVER OR FRAME WAS CAST. THE COVER SHALL BE FURTHER IDENTIFIED WITH REGARDS TO OWNERSHIP USING LETTERS AT LEAST 1" IN HEIGHT. THIS IDENTIFICATION SHALL BE "CITY OF WICHITA SEWER DEPARTMENT". THE WORD DEPARTMENT MAY BE ABBREVIATED. THE TEXTURE OF THE TOP SURFACE OF THE COVER SHALL BE MANUFACTURED IN A CHECKERED PATTERN DESIGN AS INDICATED ON THE DRAWINGS. SMOOTH BLOCKOUTS SHALL BE UTILIZED TO HIGHLIGHT THE LETTERING ON THE COVER SURFACE. THE TOTAL AREA OF SMOOTH SURFACE BLOCKOUT SHALL NOT EXCEED THE AREA AS INDICATED ON THE DRAWING. POSITIONING OF SMOOTH BLOCKOUTS AND LETTERING MAY VARY FROM THAT SHOWN ON THE DETAILED DRAWING.

REVISED APRIL, 1980.

VERTICAL RISER DETAIL

ADOPTED AS STANDARD DESIGN BY

CITY OF WICHITA, KANSAS

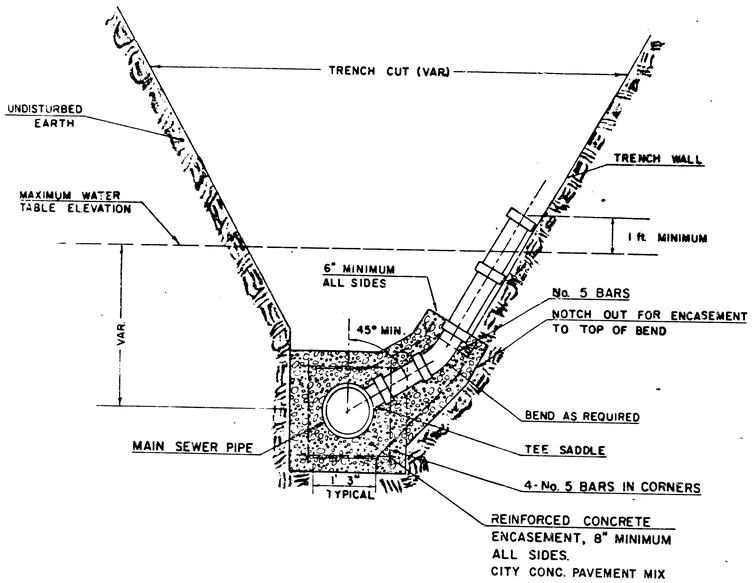

TYPICAL RISER FOR SLOPING TRENCH WALLS

NOTE:
TOP OF 4" OR 6" RISER PIPE TO BE EXTENDED TO AN ELEVATION OF 1 ft MINIMUM ABOVE THE WATER TABLE ELEVATION, WHEN WATER EXISTS, OR TO AN ELEVATION SUITABLE FOR PROVIDING SERVICE TO THE LOT TO BE SERVED AND THEN PLUGGED.

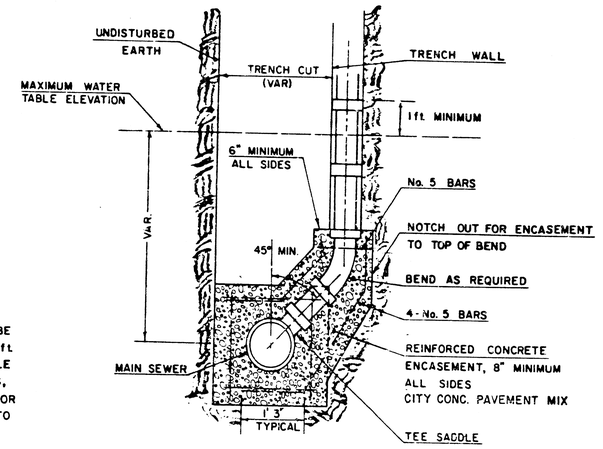

TYPICAL RISER FOR VERTICAL TRENCH WALLS

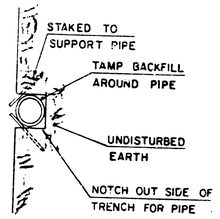

GENERAL NOTE

RISERS SHALL BE INSTALLED TO SERVE ALL LOTS OR TRACTS WHEN THE MAIN SEWER LINE IS BELOW THE WATER TABLE. RISERS SHALL ALSO BE INSTALLED TO SERVE ALL LOTS AND TRACTS WHEN THE MAIN SEWER LINE DEPTH IS SUCH THAT WOULD MAKE THE BUILDING SEWER LINE CONNECTION DIFFICULT. INSTALLATION OF RISERS BECAUSE OF MAIN LINE SEWER DEPTH SHALL BE AS APPROVED BY THE ENGINEER. THE LOCATION OF RISERS TO SERVE DEVELOPED PROPERTY SHALL BE APPROVED BY THE PROPERTY OWNER. PIPE STUBS SHALL BE INSTALLED IN MANHOLES WHERE LOCATIONS OF MANHOLES WILL PROVIDE SATISFACTORY SERVICE CONNECTIONS AS DETERMINED BY THE FIELD ENGINEER. THE VERTICAL DISTANCE BETWEEN THE FLOW LINE OF THE MANHOLE PIPE STUB AND THE FLOW LINE OF THE MAIN SEWER LINE SHALL NOT EXCEED 4 FT. MANHOLE PIPE STUBS SHALL NOT BE SET BELOW AN ELEVATION WHICH WILL PERMIT THE TOP OF THE INSIDE OF THE STUB TO MATCH THE TOP OF THE INSIDE OF THE MAIN SEWER PIPE. PIPE STUBS AND RISERS INSTALLED TO SERVE COMMERCIAL OR INDUSTRIAL PROPERTY SHALL BE 6 INCH. PIPE STUBS AND RISERS INSTALLED TO SERVE RESIDENTIAL PROPERTY MAY BE EITHER 6 INCH OR 4 INCH DEPENDING UPON THE AVAILABLE GRADE AND THE SIZE OF THE LOT AS DETERMINED BY THE FIELD ENGINEER. ENCASEMENT OF VITRIFIED CLAY MAIN SEWER PIPE SHALL EXTEND TO THE FIRST JOINT IN THE MAIN SEWER CLAY PIPE ON EACH SIDE OF THE RISER INSTALLATION. ENCASEMENT OF A.B.S. COMPOSITE OR P.V.C. MAIN SEWER PIPE SHALL EXTEND A MINIMUM OF 3 FT. ON BOTH SIDES OF THE CENTERLINE OF THE RISER. FOUR INCH AND SIX INCH RISER PIPE SHALL BE ENCASED WITH CONCRETE TO THE TOP OF THE BEND AS INDICATED IN THE DRAWINGS. FOUR INCH AND SIX INCH CLAY PIPE USED FOR RISERS SHALL BE EXTRA STRENGTH PIPE CONFORMING TO THE REQUIREMENTS OF THE LATEST REVISION OF A.S.T.M. DESIGNATION C700 WITH COMPRESSION JOINTS AS SPECIFIED FOR CLAY PIPE IN THE STANDARD SPECIFICATIONS. FOUR INCH AND SIX INCH A.B.S. OR P.V.C. PIPE SHALL BE PIPE APPROVED FOR USE IN THE CITY BY THE CHIEF PLUMBING AND MECHANICAL INSPECTOR FOR THE CENTRAL INSPECTION DIVISION OF THE DEPARTMENT OF HOUSING AND ECONOMIC DEVELOPMENT. LOCATIONS OF THE ENDS OF THE RISERS SHALL BE MARKED BY FASTENING GREEN COLORED PLASTIC TAPE TO THE END OF THE RISER WHICH SHALL BE EXTENDED TO THE GROUND SURFACE AS THE EXCAVATION IS BACKFILLED SUCH THAT THE COLORED TAPE WILL BE VISIBLE WHEN THE PROJECT IS COMPLETED. THE ENDS OF THE RISER PIPE AND MANHOLE STUBS SHALL BE CAPPED OR PLUGGED USING FITTINGS FURNISHED BY THE MANUFACTURER OF THE PIPE. CONTRACTOR'S METHODS FOR SUPPORTING AND BACKFILLING RISER PIPE SHALL BE APPROVED BY THE ENGINEER.

FURNISHING AND INSTALLING RISERS SHALL BE PAID FOR AT THE UNIT PRICES BID FOR 4" PIPE, 6" PIPE AND REINFORCED CONCRETE ENCASEMENT FOR THE VARIOUS MAIN SEWER PIPE SIZES INDICATED; WHICH PRICE SHALL INCLUDE ALL COSTS FOR COMPLETION OF THIS ITEM INCLUDING SADDLES, BENDS, CONCRETE, REINFORCING STEEL, CAPS OR PLUGS, AND ALL OTHER NECESSARY MATERIALS OR WORK. CONCRETE ENCASEMENT OF THE RISER PIPE TO THE TOP OF THE BEND AS SHOWN BY THE DRAWINGS WILL NOT BE PAID FOR DIRECTLY AND THE COST FOR THIS WORK SHALL BE CONSIDERED AS SUBSIDIARY TO THE OTHER ITEMS OF WORK.

THE PROJECT INSPECTOR SHALL REPORT ON INSPECTOR CARDS THE LOCATION OF ALL RISERS CONSTRUCTED AS MEASURED FROM THE NEAREST MANHOLE, THE DIRECTION OF SERVICE, THE ELEVATION OF THE TOP OF THE RISER, AND THE PAY QUANTITIES INVOLVED. THE PROJECT INSPECTOR SHALL ALSO REPORT ON INSPECTOR CARDS THE LOCATION, DIRECTION OF SERVICE, AND SIZE OF ALL STUBS INSTALLED IN MANHOLES.