CONSTRUCTION PLANS FOR

LATERAL 14, MAIN 24

OF THE

WAR INDUSTRIES SEWER

IN

THE CITY OF WICHITA,

SEDGWICK COUNTY, KANSAS

MICHAEL E. LINDEBAK, P.E.-CITY ENGINEER

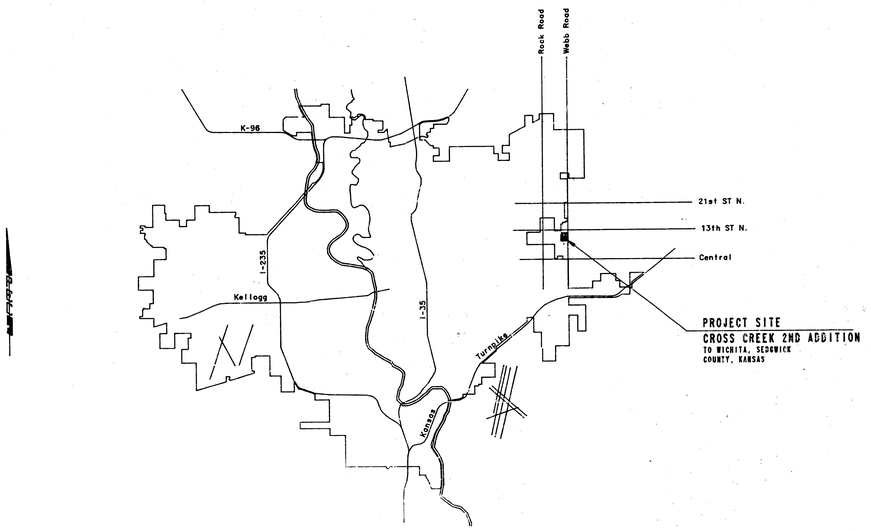

LOCATION MAP

INDEX OF SHEETS

SHEET NO. 1	TITLE SHEET
SHEET NO. 2	KEY MAP and EASEMENT GRADING
SHEET NO. 3	PLAT
SHEET NO. 4	PLAN/PROFILE
SHEET NO. 5	TYPE "P" MANHOLE DETAILS
SHEET NO. 6	TYPE "D" MANHOLE DETAILS
SHEET NO. 7	TYPE "C" MANHOLE DETAILS
SHEET NO. 8	FRAME & COVER DETAIL
SHEET NO. 9	RISERS DETAILS

BUILT PER PLAN RDL 1-89

CITY OF WICHITA PROJECT NO. 468-76-245-81875-000-000-001

JUNE, 1988

PLANS PREPARED BY

PROFESSIONAL ENGINEERING CONSULTANTS, P.A.

ENGINEERS

WICHITA, KANSAS

MICHAEL D. SCHOMAKER LICENSED 6778 KANSAS PROFESSIONAL ENGINEER

1/9

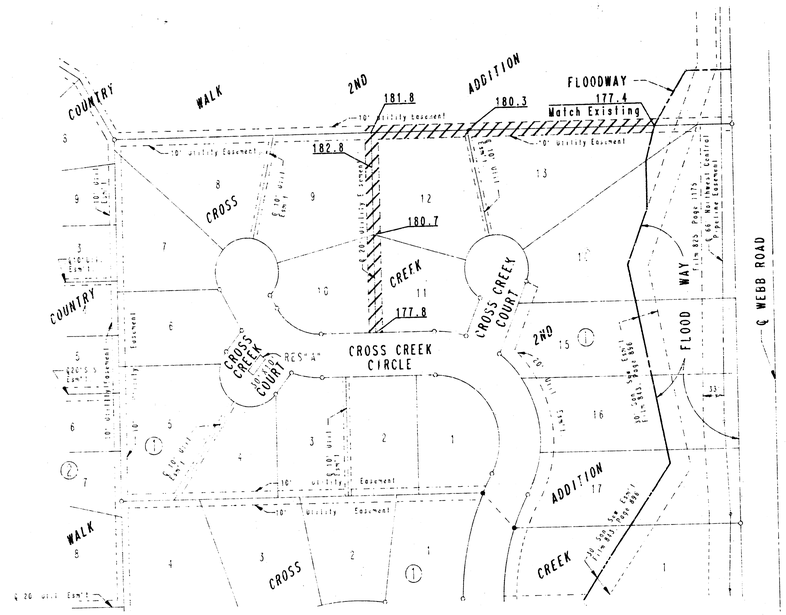

SCALE 1"=100'

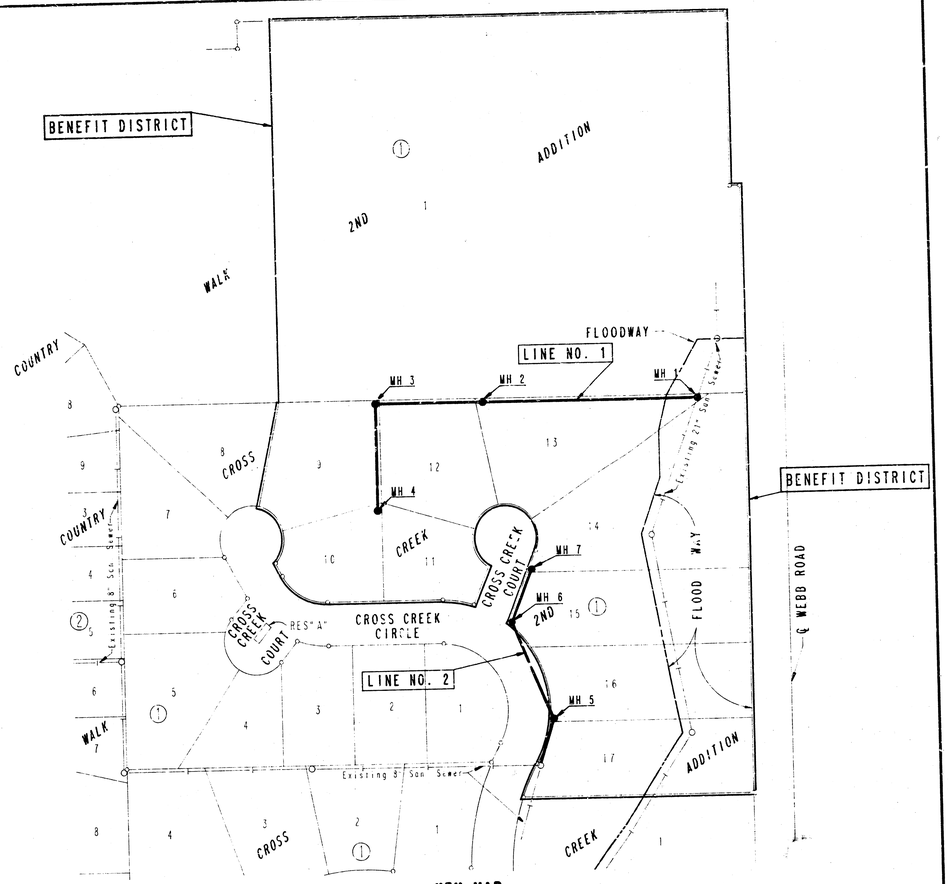

KEY MAP

EASEMENT GRADING

Limits of Area to be Graded

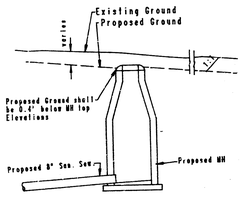

TYPICAL PROFILE

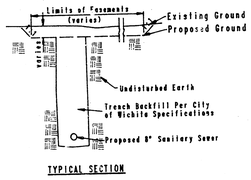

TYPICAL SECTION

"CUT" SITUATIONS

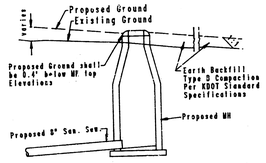

TYPICAL PROFILE

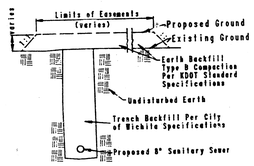

TYPICAL SECTION

"FILL" SITUATIONS

BENCH MARKS

BM - RR Spike in Northeast face 18" Elm 25' East and 25' North of the Northeast corner of Lot 10, Cross Creek 2nd Addition. ELEV.=180.72

BM - RR Spike in South face 20" Elm 107' West and 14' North of the Southeast corner of Lot 1, Cross Creek 2nd Addition. ELEV.=175.50

BM - Chiseled "□" Southwest corner RCB 37' North and 15' East of the Northeast corner of Cross Creek 2nd Addition. ELEV.=170.14

GENERAL NOTES

1. ALL CONSTRUCTION AND MATERIALS TO COMPLY WITH CITY OF S.CHITA SPECIFICATIONS AND STANDARDS.
2. ALL ELEVATIONS SHOWN ARE CITY OF WICHITA DATUM (USGS-1187.4 = CITY DATUM).
3. THE CONTRACTOR SHALL LIMIT THE EXTENT OF TRENCH TO REMAIN OPEN OVERNIGHT AND WEEKENDS TO LESS THAN 55 FEET.
4. AT LEAST 48 HOURS PRIOR TO BEGINNING EXCAVATION, IF REQUIRED, (EXCLUDING WEEKENDS AND HOLIDAYS), THE CONTRACTOR SHALL CONTACT THE KANSAS ONE-CALL SYSTEM, A UTILITY LOCATION SERVICE, AT (316) 687-2470 TO REQUEST THE FOLLOWING UTILITY COMPANIES TO LOCATE ANY EXISTING LINES WITHIN THE PROJECT AREA: GAS SERVICE COMPANY, K.G.&E., THE WICHITA WATER DEPARTMENT, AIR CAPITAL CABLEVISTON, AND THE TELEPHONE COMPANY.
5. UNDERGROUND UTILITY SERVICE LINES AND OVERHEAD UTILITY POLE LINES ARE TO BE ADJUSTED AS NECESSARY BY OTHERS PRIOR TO CONSTRUCTION UNLESS THE PLANS SPECIFICALLY CALL FOR THEIR ADJUSTMENT BY THE CONTRACTOR OR UNLESS THE PLANS SPECIFICALLY IDENTIFY A UTILITY TO BE ADJUSTED BY ITS OWNER DURING CONSTRUCTION. EXISTING UTILITIES AND THEIR LOCATION, AS SHOWN ON THE PLANS, REPRESENT THE BEST INFORMATION OBTAINABLE FOR DESIGN. THE CONTRACTOR WILL BE REQUIRED TO WORK AROUND EXISTING UTILITIES WITHIN THE RIGHT-OF-WAY WHICH DO NOT CONFLICT WITH PROPOSED CONSTRUCTION.
6. THE CONTRACTOR SHALL BE RESPONSIBLE FOR PRESERVING PROPERTY IRONS. THE CONTRACTOR SHALL BE REQUIRED TO RE-ESTABLISH ANY PROPERTY IRONS WHICH ARE DAMAGED OR DESTROYED BY HIS CONSTRUCTION OPERATIONS. SUCH IRONS SHALL BE RE-ESTABLISHED BY A LICENSED LAND SURVEYOR IN ACCORDANCE WITH STATE LAWS. ALL COSTS FOR THIS WORK SHALL BE SUBSIDIARY TO THE OTHER ITEMS OF WORK.
7. CONTRACTOR SHALL PROVIDE POSITIVE DRAINAGE AWAY FROM ALL MANHOLE COVERS.
8. CONTRACTOR SHALL GRADE THE SANITARY SEWER ALIGNMENT TO THE PROFILE AND ELEVATIONS SHOWN ON THE EASEMENT GRADING PLAN TO THE EXTENT THAT DIRT GENERATED BY THIS PROJECT WILL ALLOW. THE CONTRACTOR SHALL NOT BE REQUIRED TO FURNISH ADDITIONAL DIRT TO ACCOMPLISH THIS GRADING. ALL COSTS FOR GRADING SHALL BE SUBSIDIARY TO THE PROJECT.
9. UNLESS OTHERWISE SPECIFIED ON THE PLANS, MANHOLES MAY BE TYPE "p", "C", OR "B" MANHOLES. MANHOLES SHALL BE CONSTRUCTED IN ACCORDANCE WITH THE STANDARD SPECIFICATIONS AND THE STANDARD DETAIL DRAWINGS.

RISER LOCATION TABLE

NO.	TEE SADDLE LOCATION LINE NO.	STATION	BLOCK NO.	LOT NO.	DIRECTION	4" RISER PIPE (L.F.)
1	2	0+15	1	17	Rt.	3.0

MICHAEL D. SCHOMAKER LICENSED 6778 KANSAS PROFESSIONAL ENGINEER

No.	Revision	By	Date

LATERAL 14, MAIN 24 OF THE WAR INDUSTRIES SEWER

KEY MAP and EASEMENT GRADING

MICHAEL E. LINDEBAK, P.E. - CITY ENGINEER
CITY OF WICHITA PROJECT NO. 468-76-245-81875-000-000-001

PROFESSIONAL ENGINEERING CONSULTANTS, P.A.
ENGINEERS
WICHITA, KANSAS

Designed by WDS, CRY	Job No. 34-38252-1	Sht. 2 of 9
Drawn by TWV, GLW	Date JUNE, 1988	

2/9

E 3-31

CROSS CREEK 2ND ADDITION

TO WICHITA, SEDGWICK COUNTY, KANSAS

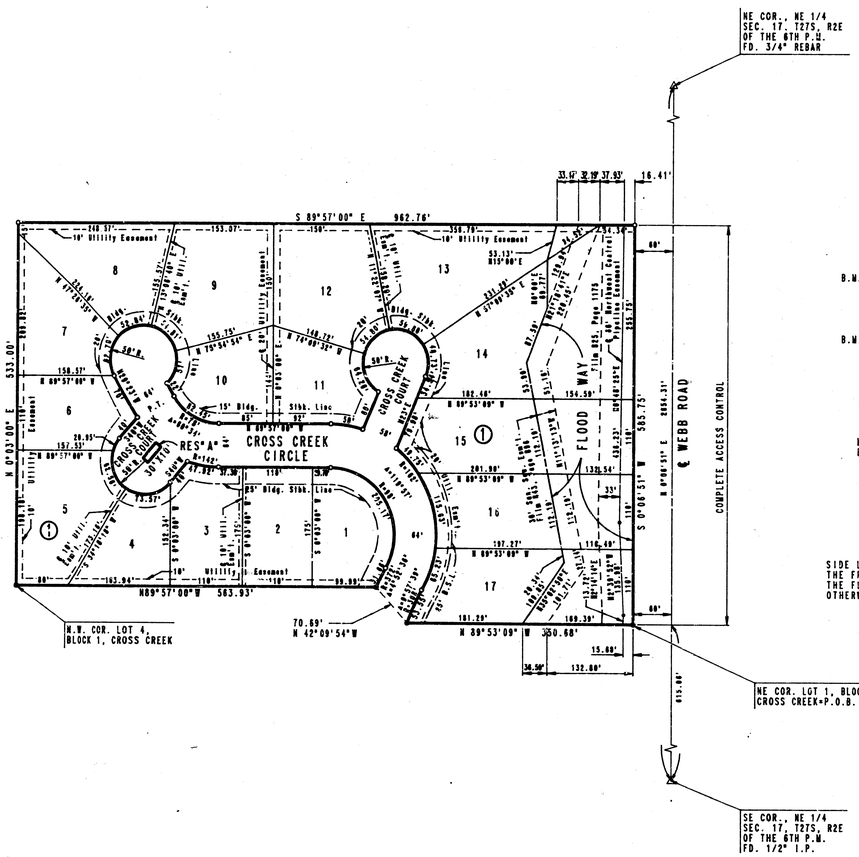

SCALE: 1" = 100'

● = IRON FOUND
○ = IRON SET
△ = SECTION CORNER
B.S.L. = BUILDING SETBACK LINE

B.M. - CITY OF WICHITA BENCH MARK DISC, 34 FT. EAST AND 44 FT. SOUTH OF NE CORNER SE 1/4 SEC. 17, 12?S, R2E. ELEV.=1360.32 M.S.L.

B.M. - CHIS. "O" SW CORNER RCB .37' NORTH AND 15' EAST OF NE CORNER LOT 14, BLOCK 1 CROSS CREEK 2ND ADDITION ELEV.=1370.14 CITY DATUM ELEV.=1357.54 M.S.L.

MINIMUM PAD ELEVATION AS FOLLOWS:

BLOCK 1	CITY DATUM FT.	M.S.L. FT.
LOT 13	174.5	1361.90
LOT 14	173.5	1360.90
LOT 15	173.0	1360.40
LOT 16	172.5	1359.90
LOT 17	172.0	1359.40

SIDE LOT LINES IN BLOCK 1 ARE DIMENSIONED FROM THE FRONT LOT LINE TO THE FLOODWAY LINE AND FROM THE FLOODWAY LINE TO THE BACK LOT LINE UNLESS OTHERWISE INDICATED.

STATE OF KANSAS)
) SS
COUNTY OF SEDGWICK)

I, JAMES P. MOORE, A REGISTERED LAND SURVEYOR IN AFORESAID STATE AND COUNTY DO HEREBY CERTIFY ON THIS 2nd DAY OF June, 1988 THAT I WAS IN RESPONSIBLE CHARGE OF SURVEYING AND PLATTING OF CROSS CREEK 2ND ADDITION TO WICHITA, SEDGWICK COUNTY, KANSAS, INTO A RESERVE, LOTS, BLOCKS AND STREETS AS SHOWN ON THE ACCOMPANYING PLAT AND DESCRIBED AS A TRACT OF LAND LOCATED IN THE NORTHEAST QUARTER (NE 1/4) SECTION 17, T27S, R2E OF THE 6TH P. M. AND INCLUDING A REPLAT OF PART OF LOT 1, BLOCK 2 COUNTRY WALK AN ADDITION TO WICHITA, SEDGWICK COUNTY, KANSAS, MORE PRECISELY DESCRIBED AS FOLLOWS:

BEGINNING AT THE NORTHEAST CORNER OF LOT 1, BLOCK 2 OF CROSS CREEK AN ADDITION TO WICHITA, SEDGWICK COUNTY, KANSAS;

THENCE N89°53'09"W, ALONG THE NORTH LINE OF SAID BLOCK 2 A DISTANCE OF 350.68 FEET TO THE NORTHWEST CORNER OF SAID LOT 1, BLOCK 2;

THENCE N42°09'54"W A DISTANCE OF 70.69 FEET TO THE NORTHEAST CORNER OF LOT 1, BLOCK 1 OF SAID CROSS CREEK;

THENCE N89°57'00"W ALONG THE NORTH LINE OF SAID BLOCK 1, A DISTANCE OF 563.93 FEET TO THE NORTHWEST CORNER OF LOT 4, BLOCK 1 SAID CROSS CREEK, BEING ON THE EAST LINE OF BLOCK 2, COUNTRY WALK, AN ADDITION TO WICHITA, SEDGWICK COUNTY, KANSAS;

THENCE N0°03'00"E, ALONG SAID EAST LINE AND THE EXTENSION OF SAID EAST LINE A DISTANCE OF 533.00 FEET;

THENCE S89°57'00"E, A DISTANCE OF 962.76 FEET TO THE WEST RIGHT-OF-WAY LINE OF WEBB ROAD;

THENCE S0°06'51"W ALONG SAID RIGHT-OF-WAY A DISTANCE OF 585.75 FEET TO THE POINT OF BEGINNING, ENCOMPASSING 12.228 ACRES MORE OR LESS.

James P. Moore
JAMES P. MOORE, L.S. 829
PROFESSIONAL ENGINEERING CONSULTANTS, P.A.

JAMES P. MOORE LS-829 KANSAS LAND SURVEYOR

KNOW ALL MEN BY THESE PRESENTS THAT WE, THE UNDERSIGNED PROPERTY OWNERS OF THE LAND AS ABOVE SET FORTH IN THE LAND SURVEYOR'S CERTIFICATE, HAVE CAUSED THE LAND TO BE SURVEYED AND PLATTED INTO LOTS, BLOCKS, STREETS AND A RESERVE THE SAME TO BE KNOWN AS CROSS CREEK 2ND ADDITION TO WICHITA, SEDGWICK COUNTY, KANSAS. EASEMENTS AS INDICATED FOR THE CONSTRUCTION AND MAINTENANCE OF PUBLIC UTILITIES AND DRAINAGE ARE HEREBY GRANTED. THE STREETS ARE HEREBY DEDICATED TO AND FOR THE USE OF THE PUBLIC. THE FLOODWAY SHALL BE THE RESPONSIBILITY OF THE OWNERS UNTIL SUCH TIME AS THE GOVERNING BODY EXERCISING JURISDICTION ELECTS TO ASSUME THE RESPONSIBILITY FOR THE MAINTENANCE AND IMPROVEMENT OF THE FLOODWAY. PROVIDED FURTHER THAT NO STRUCTURES SHALL BE CONSTRUCTED ON OR WITHIN SAID FLOODWAY, NOR SHALL ANY FILL, CHANGE OF GRADE, CREATION OF CHANNEL OR OTHER WORK BE CARRIED ON WITHOUT THE PERMISSION OF THE CITY ENGINEER, CITY OF WICHITA. MINIMUM PAD ELEVATION FOR LOTS 13 TO 17 BLOCK 1 ARE INDICATED ON THE FACE OF THE PLAT. ALL ABUTTERS RIGHTS OF ACCESS TO AND FROM WEBB ROAD OVER AND ACROSS THE EAST LINE OF CROSS CREEK 2ND ADDITION ARE HEREBY GRANTED TO THE CITY OF WICHITA. ALL PORTIONS OF COUNTRY WALK AN ADDITION TO WICHITA, SEDGWICK COUNTY, KANSAS, LOCATED WITHIN THE ABOVE DESCRIBED TRACT OF LAND ARE HEREBY VACATED AND REPLATTED BY VIRTUE OF K.S.A. 12-512(b) AMENDED.

RESERVE "A" IS HEREBY PLATTED FOR LANDSCAPING, AND IS TO BE OWNED AND MAINTAINED BY ONE OR MORE HOMEOWNERS ASSOCIATION TO BE FORMED WITHIN CROSS CREEK 2ND ADDITION TO WICHITA, SEDGWICK COUNTY, KANSAS.

OWNERS:

LAKEPOINT COMPANY, A KANSAS GENERAL PARTNERSHIP
BY RITCHIE DEVELOPMENT CORPORATION
MANAGING PARTNER OF SAID PARTNERSHIP

BY: Jack D. Ritchie
JACK D. RITCHIE, C.E.O.

STATE OF KANSAS)
) SS
COUNTY OF SEDGWICK)

BE IT REMEMBERED THAT ON THIS 3rd DAY OF June, 1988, BEFORE ME, A NOTARY PUBLIC IN AND FOR SAID STATE AND COUNTY, CAME RITCHIE DEVELOPMENT CORPORATION, BY JACK D. RITCHIE, C.E.O., ON BEHALF OF LAKEPOINT COMPANY, A KANSAS GENERAL PARTNERSHIP, TO ME PERSONALLY KNOWN TO BE THE SAME PERSON WHO EXECUTED THE FOREGOING INSTRUMENT OF WRITING AND DULY ACKNOWLEDGED THE EXECUTION OF THE SAME. IN TESTIMONY WHEREOF I HAVE HEREUNTO SET MY HAND AND AFFIXED MY NOTARIAL SEAL THE DAY AND YEAR ABOVE WRITTEN.

Charlene A. Stilwell, NOTARY PUBLIC

MY APPOINTMENT EXPIRES 11/30/91

CHARLENE A. STILWELL NOTARY PUBLIC My Appt. Exp. STATE OF KANSAS

THIS PLAT HAS BEEN SUBMITTED TO AND APPROVED BY THE WICHITA-SEDGWICK COUNTY METROPOLITAN AREA PLANNING COMMISSION, WICHITA, KANSAS. DATED THIS 7th DAY OF June, 1988.

Elton Parsons, CHAIRMAN
ELTON PARSONS

Marvin S. Krout, SECRETARY
MARVIN S. KROUT

THIS PLAT APPROVED AND ALL DEDICATIONS SHOWN HEREON ARE ACCEPTED BY THE CITY COUNCIL OF THE CITY OF WICHITA, KANSAS. DATED THIS DAY OF June, 1988.

Sheldon Kamen, MAYOR
SHELDON KAMEN

Dale E. Rea, DEPUTY CITY CLERK
DALE E. REA

ENTERED ON TRANSFER RECORD THIS 27 DAY OF June, 1988.

Don Wright, COUNTY CLERK
DON WRIGHT

THIS IS TO CERTIFY THAT THIS INSTRUMENT WAS FILED FOR RECORD IN THE REGISTER OF DEEDS OFFICE AT 3:30P M., ON THIS 27TH DAY OF JUNE, 1988.

Pat Kettler, REGISTER OF DEEDS
PAT KETTLER

Ed Resa, DEPUTY
ED RESA

95486

20.00 k

3/9

Sht. 3 of 3

E 3-31

L

Sta. 0+00.0
Construct MH 1 * on
Exist. 21" San. Sew.
Outside Drop MH
Remove exist. 21" pipe as
required after MH
acceptance.

Sta. 3+27.8
Const. MH 2
Standard MH

Sta. 4+94.0
Const. MH 3
Standard MH

Sta. 6+50.6
Const. MH 4
Standard MH

Sta. 0+00.0
Break into Ex. Precast MH
and Install new 8" Pipe.
Grout water tight w/non-
shrink grout. Reshape MH
floor to provide smooth
flow.

Sta. 0+71.7
Const. MH 5
Standard MH

Sta. 2+26.6
Const. MH 6
Standard MH

Sta. 3+10.4
Const. MH 7
Standard MH

CROSS CREEK COURT

CROSS CREEK CIRCLE

CROSS CREEK

2ND ADDITION

COUNTRY WALK 2ND ADDITION

FLOODWAY

Install 1-4" Stub and Plug

Install 1-4" Stub and Plug

Install 1-4" Stub and Plug

Install 1-4" Stub and Plug

Install 327.8 L.F. 8" Pipe

Install 166.2 L.F. 8" Pipe

Install 156.6 L.F. 8" Pipe

Install 71.7 L.F. 8" Pipe

Install 154.9 L.F. 8" Pipe

Install 83.8 L.F. 8" Pipe

* Prior to beginning construction, the Contractor shall excavate at Sta. 0+00.0 to verify the horizontal and vertical location of the exist. 21" pipe. Any discrepancy between plan and field information shall be reported immediately to the engineer so that any adjustments may be made.

SCALE:
PLAN: LAT. & LONG. 40 0 40 80
PROFILE: HORIZ. SAME AS ABOVE
VERT. 0 5

LINE NO. 1

LINE NO. 2

WH 1 Top Elev. =173.2
WH 2 Top Elev. =181.6
WH 3 Top Elev. =182.3
WH 4 Top Elev. =180.9
Exist. MH Top Elev. =174.35
WH 5 Top Elev. =176.5
WH 6 Top Elev. =177.7
WH 7 Top Elev. =180.1

Existing Ground
Proposed Ground
Proposed Ground (By Others)
Existing Ground

DWS Elev. =172.2

E in=171.00 from 2-4" Stubs (SE & SW)

E in=171.10 from 1-4" Stub (NE)

E out=158.35 (21" PVC)
E in=163.90

E=166.90
E=167.90
E=168.90
E=169.10
E=169.47
E=169.84
E=170.21
E=170.46
E=170.87
E=171.35
E=171.72
E=172.09
E=172.46
E=166.57
E=168.157
E=170.56
E=170.177

E out=158.65 From Ex. 8" (W)
E in=162.37

E out=166.00
E in=166.00

E out=169.10
E in=169.10

E=170.56

327.8 L.F. 8" Pipe @ 1.00 %
166.2 L.F. 8" Pipe @ 0.40 %
156.6 L.F. 8" Pipe @ 0.40 %
71.7 L.F. 8" Pipe @ 2.00 %
154.9 L.F. 8" Pipe @ 2.00 %
83.8 L.F. 8" Pipe @ 1.75 %

0+00 1+00 2+00 3+00 4+00 5+00 6+00 0+00 1+00 2+00 3+00

185 180 175 170 165 160 155

MICHAEL D. SCHOMAKER LICENSED 6778 KANSAS PROFESSIONAL ENGINEER

PROFESSIONAL ENGINEERING CONSULTANTS, P.A.
ENGINEERS
WICHITA, KANSAS

Designed By MDS, CRY
Drawn By TWV, GLM

LATERAL 14, MAIN 24 OF THE WAR INDUSTRIES SEWER

LINE NO. 1 and 2

MICHAEL E. LINDEBAK, P.E. - CITY ENGINEER
CITY OF WICHITA PROJECT NO. 468-78-744 & 81873-000-00-00-44

Job No. 34-88252-1
Date June, 1986

4/9

Sheet 4 of 9

SEWER APPURTENANCES DETAILS
ADOPTED AS STANDARD DESIGN
BY
CITY OF WICHITA

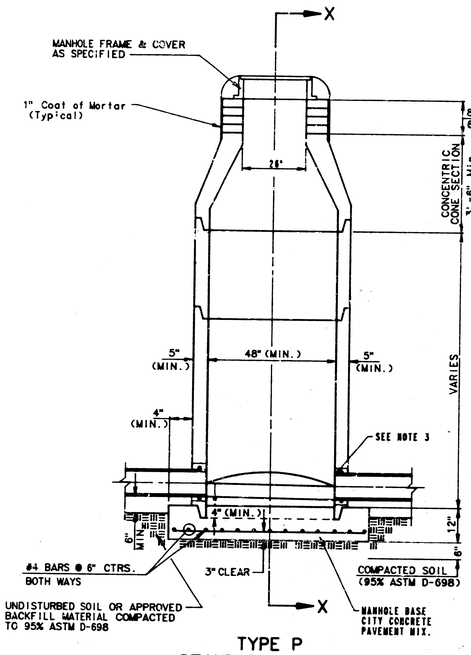

TYPE P
STANDARD MANHOLE

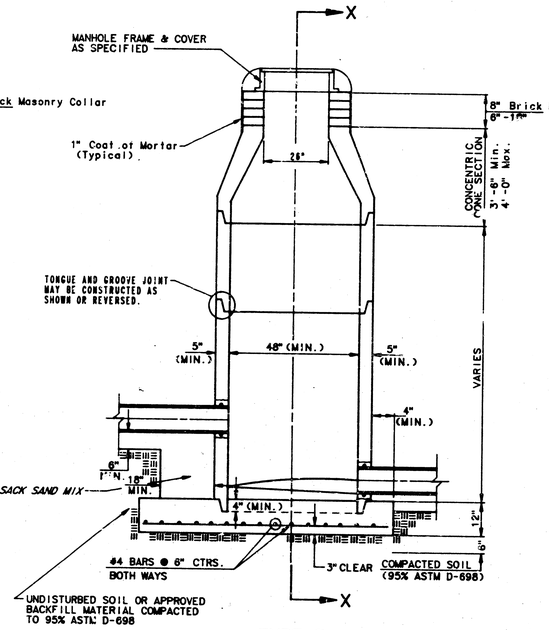

TYPE P
INSIDE DROP MANHOLE

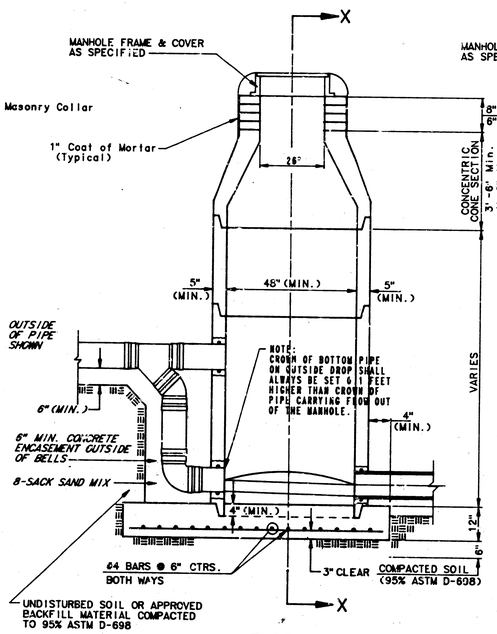

TYPE P
OUTSIDE DROP MANHOLE

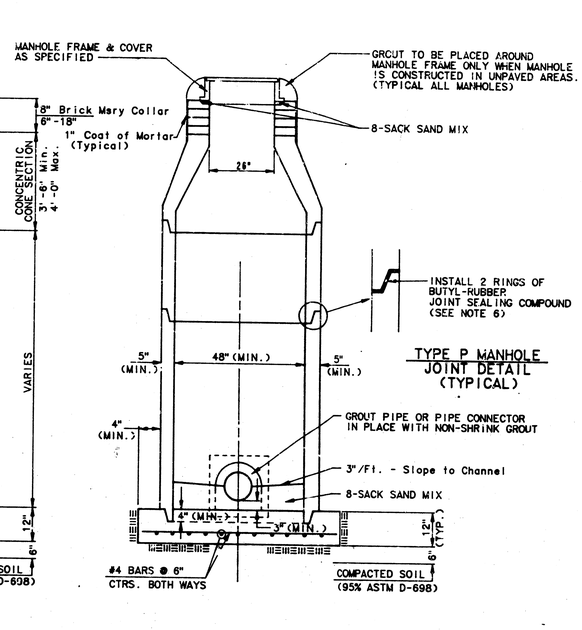

TYPE P MANHOLE
JOINT DETAIL
(TYPICAL)

SECTION X
(TYPICAL)

GENERAL NOTES

PRECAST MANHOLE NOTES

1. ALL PRECAST CONCRETE MANHOLE SECTIONS SHALL CONFORM TO THE LATEST REVISION OF A.S.T.M. C478 AS MODIFIED BY THE SPECIFICATIONS.
2. NON-SHRINK GROUT SHALL BE NON-METALLIC TYPE.
3. APPROVED FLEXIBLE WATERSTOP GASKETS SHALL BE INSTALLED TO JOIN THE SEWER TO THE MANHOLE WALL WHEN A.B.S. COMPOSITE PIPE OR P.V.C. PIPE IS USED. FOR OTHER TYPES OF PIPE THE SEWER SHALL BE GROUTED IN PLACE WITH NON-SHRINK GROUT. THE SEWER PIPE SHALL BE SUPPORTED WITH CONCRETE ENCASEMENT A MINIMUM OF 3 FEET FROM THE MANHOLE WALL AND TO THE FIRST JOINT FOR V.C.P. SUCH THAT THE JOINT REMAINS FLEXIBLE.
4. ALL INSIDE SURFACES OF THE CONCRETE MANHOLE WHICH WOULD BE EXPOSED TO SEWER GAS SHALL BE COATED WITH 2 COATS TREMEC SERIES 66 HI-BUILD EPOXOLINE, DRY THICKNESS OF 8 MILS (MIN.)
5. EXTERIOR MANHOLE WALLS SHALL BE COATED WITH 1 COAT MOBILARMA 633 BITUMINUS COATING.
6. JOINT SEALING COMPOUND SHALL BE KENT SEAL NO. 2 OR APPROVED EQUAL.
7. PRECAST MANHOLES SHALL BE SET AT LEAST 4 INCHES INTO THE MANHOLE BASE.
8. TOP OF MANHOLE FLOOR SLAB SHALL BE AT LEAST 3 INCHES BELOW THE FLOW LINE OF THE OUTLET PIPE TO INSURE SUFFICIENT MINIMUM THICKNESS OF SHAPED INVERT.
9. LIFTING HOLES SHALL BE FILLED WITH NON-SHRINK GROUT AND THE INTERIOR SURFACE COATED AS SPECIFIED.
10. MORTAR USED IN MASONRY CONSTRUCTION SHALL CONTAIN 6 SACKS OF CEMENT PER CUBIC YARD. CONCRETE USED IN MANHOLE BASES SHALL CONFORM TO THE REQUIREMENTS OF CONCRETE FOR CONCRETE PAVEMENT CONSTRUCTION AS SPECIFIED IN THE CITY STANDARD PAVING SPECIFICATIONS USING CITY CONCRETE PAVEMENT MIX WITHOUT AIR ENTRAINING ADMIXTURE. MORTAR SHALL BE PLACED AROUND THE MANHOLE RING AS SHOWN ON THE DRAWINGS WHEN MANHOLES ARE CONSTRUCTED IN UNPAVED AREAS. MANHOLES CONSTRUCTED WHERE PIPE SIZES ARE SMALLER THAN 24" SHALL HAVE AN INSIDE DIAMETER OF 4'. MANHOLES CONSTRUCTED WHERE PIPE SIZES ARE 24" OR LARGER SHALL HAVE AN INSIDE DIAMETER OF 5'. COMPLETED MANHOLE SHALL BE WITHOUT LEAKS AND WATER TIGHT.
11. REINFORCING STEEL SHALL BE INSTALLED IN THE MANHOLE BASES AND SHALL CONSIST OF NO. 4 BARS PLACED ON 6" CENTERS IN BOTH DIRECTIONS. THE MANHOLE BASE REINFORCEMENT SHALL BE PLACED AT LEAST 3" ABOVE THE BOTTOM OF THE MANHOLE BASE. ALL COSTS FOR FURNISHING AND INSTALLING REINFORCING STEEL SHALL BE INCLUDED IN THE UNIT PRICE BID FOR THE MANHOLE.
12. OPENINGS SHALL BE CUT INTO THE MANHOLE WALL WHEN OUTSIDE DROPS ARE CONSTRUCTED OR EXISTING MANHOLES. SUCH OPENINGS CUT INTO EXISTING MANHOLES SHALL BE AS SMALL AS PRACTICAL TO FACILITATE INSTALLING AND GROUTING THE NEW PIPE IN PLACE. WATERSTOP GASKETS SHALL BE USED WITH P.V.C. AND A.B.S. COMPOSITE PIPE. THE NEW PIPE SHALL BE GROUTED INTO THE OPENING USING AN APPROVED NONSHRINK GROUT FOR THE FULL MANHOLE WALL THICKNESS. THE EXTERIOR OF THE COMPLETED CONNECTION SHALL BE SEALED WITH AN APPROVED BITUMINOUS COATING SUCH THAT THE CONNECTION WILL BE WATER TIGHT. FLOOR OF MANHOLE SHALL BE MODIFIED TO FORM NEW FLOW CHANNEL FOR THE NEW CONNECTION AS INDICATED BY THE DRAWING. THIS WORK, INCLUDING MODIFICATION OF MANHOLE FLOOR, SHALL BE PAID FOR AT THE UNIT PRICE BID FOR OUTSIDE DROP STACK CONSTRUCTED OR EXISTING MANHOLE.
13. THE FLOORS OF ALL MANHOLES SHALL BE SHAPED WITH FLOW CHANNELS SUCH THAT THE MANHOLES WILL BE SELF CLEANING AND FREE OF AREAS WHERE SOLIDS COULD BE DEPOSITED AS SEWAGE FLOWS THROUGH THE MANHOLE FROM ALL INLET PIPES TO THE OUTLET PIPE. FLOW CHANNELS SHALL BE FORMED TO MATCH THE BOTTOM HALVES OF THE INFLOWING PIPES AND THE OUTFLOWING PIPE AS SHOWN BY THE DRAWINGS EXCEPT FOR INSIDE DROP MANHOLES. FLOW CHANNELS FOR INSIDE DROP MANHOLES SHALL BE CONSTRUCTED AS INDICATED BY THE DRAWING. MANHOLE FLOORS SHALL HAVE SLOPES OF 3 INCHES PER FOOT IN THE AREAS OUTSIDE OF THE FLOW CHANNELS SLOPED TOWARD THE FLOW CHANNELS. PIPES LAID THROUGH MANHOLES SHALL HAVE THE TOP HALF REMOVED TO MEET LINES FOR THE FULL INSIDE DIAMETER OF THE MANHOLE. MANHOLE FLOORS SHALL THEN BE SHAPED AROUND THE BOTTOM HALF OF THE PIPE WHICH FORMS THE FLOW CHANNEL.
14. PIPES INSTALLED WITHIN THE EXCAVATION MADE FOR THE MANHOLE SHALL BE CRADLED WITH CONCRETE TO THE LIMITS OF THE MANHOLE EXCAVATION. WHEN CLAY PIPE IS USED, THE CRADLE SHALL EXTEND TO THE FIRST JOINT OUTSIDE THE MANHOLE. THE CRADLE SHALL BE TERMINATED AT THE CLAY PIPE JOINT IN A MANNER WHICH WILL MAINTAIN THE FLEXIBILITY OF THE JOINT. COST OF CRADLE WITHIN MANHOLE EXCAVATION OR TO CLAY PIPE JOINTS ADJACENT TO MANHOLE SHALL BE INCLUDED IN THE UNIT PRICE BID FOR THE MANHOLE.
15. MANHOLE COVER CASTINGS AND MANHOLE FRAME CASTINGS SHALL CONFORM TO THE REQUIREMENTS AS INDICATED IN THE STANDARD SPECIFICATIONS AND AS SHOWN IN THE STANDARD DETAIL DRAWING.
16. THE VERTICAL DROP IN INSIDE DROP MANHOLES SHALL NOT EXCEED 4' FOR INFLOWING PIPES SIZED 12" OR SMALLER AND 2' FOR INFLOWING PIPES LARGER THAN 12". THE CROWNS OF INFLOWING PIPES SHALL NEVER BE SET LOWER THAN THE CROWN OF THE OUTFLOWING PIPE.
17. STANDARD MANHOLES AND STANDARD INSIDE DROP MANHOLES SHALL BE BID AS STANDARD MANHOLES FOR THE TYPE AND DIAMETER INDICATED. OUTSIDE DROP MANHOLES SHALL BE BID AS STANDARD OUTSIDE DROP MANHOLES FOR THE TYPE AND DIAMETER INDICATED. ALL MANHOLE DIAMETERS WILL BE 4' UNLESS INDICATED OTHERWISE.
18. A BRICK MASONRY COLLAR SHALL BE INSTALLED BETWEEN THE CAST IRON FRAME AND THE CONCENTRIC CONE. THE COLLAR WILL HAVE 8" WALLS AND A VERTICAL HEIGHT OF 6" MINIMUM AND 18" MAXIMUM. A 1" COAT OF MORTAR WILL BE PLASTERED ON THE OUTSIDE OF THE COLLAR.

SEWER APPURTENANCES DETAILS

ADOPTED AS STANDARD DESIGN BY

CITY OF WICHITA, KANSAS

TYPE "D" MANHOLE

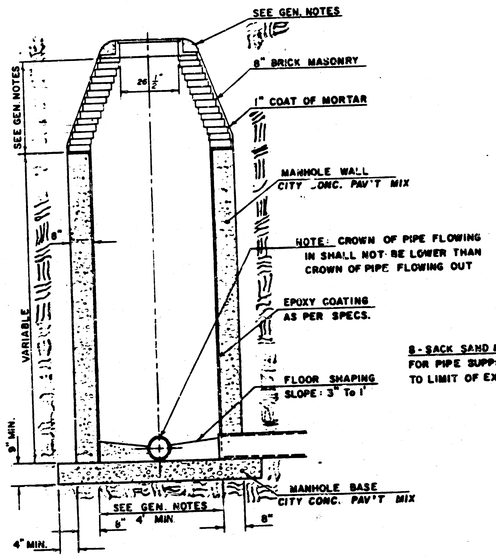

TYPE "D" INSIDE DROP MANHOLE

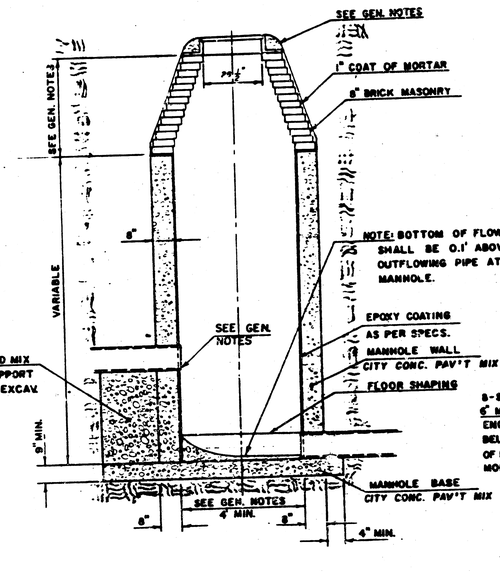

TYPE "D" OUTSIDE DROP MANHOLE

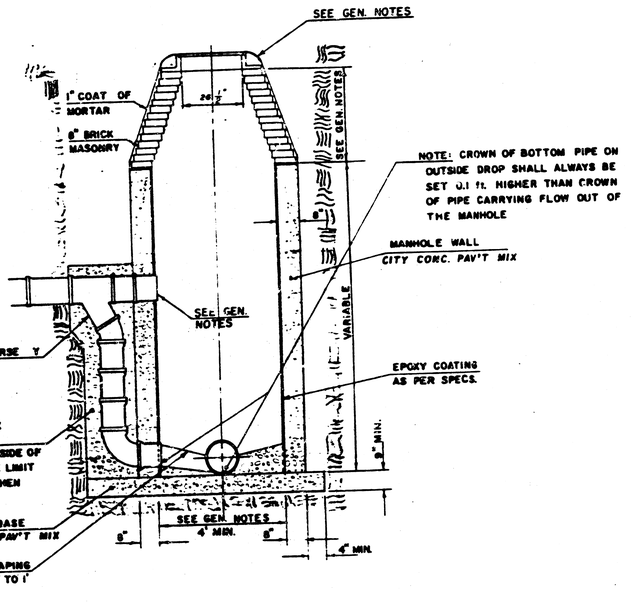

GENERAL NOTES

1. MORTAR USED IN MASONRY CONSTRUCTION SHALL CONTAIN 6 SACKS OF CEMENT PER CUBIC YARD. CONCRETE USED IN MANHOLE WALLS AND BASES SHALL CONFORM TO THE REQUIREMENTS OF CONCRETE FOR CONCRETE PAVEMENT CONSTRUCTION AS SPECIFIED IN THE CITY STANDARD PAVING SPECIFICATIONS USING CITY CONCRETE PAVEMENT MIX WITHOUT AIR ENTRAINING ADMIXTURE. MORTAR SHALL BE PLACED AROUND THE MANHOLE RING AS SHOWN ON THE DRAWINGS WHEN MANHOLES ARE CONSTRUCTED IN UNPAVED AREAS.

   ALL INSIDE SURFACES OF THE CONCRETE MANHOLE WALL WHICH WOULD BE EXPOSED TO SEWER GAS SHALL BE PROTECTED BY AN APPROVED EPOXY COATING. TYPE "D" MANHOLES MAY BE USED ON PIPE SIZES 8" TO 36" WHEN THE MANHOLE DEPTH EXCEEDS THE REQUIRED CORBEL HEIGHT BY 1' PLUS THE OUTSIDE DIAMETER OF THE LARGEST PIPE IN THE MANHOLE.

   MANHOLES CONSTRUCTED WHERE PIPE SIZES ARE SMALLER THAN 24" SHALL HAVE A DIAMETER OF 4'. MANHOLES CONSTRUCTED WHERE THE PIPE SIZES ARE 24" OR LARGER SHALL HAVE A DIAMETER OF 5'. THE HEIGHT OF THE CORBELS ON 4' DIAMETER MANHOLES SHALL BE 4' MANHOLES HAVING A DIAMETER OF 5' SHALL HAVE CORBELS 6' IN HEIGHT. COMPLETED MANHOLE SHALL BE WITHOUT LEAKS AND WATER TIGHT.

2. REINFORCING STEEL SHALL BE INSTALLED IN THE MANHOLE BASE. REINFORCING STEEL SHALL CONSIST OF NO. 4 BARS PLACED ON 6" CENTERS IN BOTH DIRECTIONS. REINFORCING STEEL SHALL BE PLACED 6" ABOVE THE BOTTOM OF THE MANHOLE BASE. COST OF FURNISHING AND INSTALLING REINFORCING STEEL SHALL BE INCLUDED IN THE UNIT PRICE BID FOR THE MANHOLE.

3. AN OPENING SHALL BE CUT IN THE MANHOLE WALL FOR THE UPPER INLET PIPE FOR INSIDE AND OUTSIDE DROP MANHOLES. THE UPPER INLET PIPE SHALL BE GROUTED INTO THIS OPENING WITH NON-SHRINK GROUT. THE EXTERIOR OF THIS COMPLETED CONNECTION SHALL BE SEALED WITH AN APPROVED BITUMINOUS COATING SUCH THAT THE CONNECTION WILL BE WATER TIGHT. THE INTERIOR PLASTIC LINING SHALL BE SEALED AROUND THE INLET PIPE OPENING IN SUCH A MANNER THAT WILL EFFECTIVELY MAINTAIN THE INTEGRITY OF THE PROTECTIVE PLASTIC LINER.

4. THE FLOORS OF ALL MANHOLES SHALL BE SHAPED WITH FLOW CHANNELS SUCH THAT THE MANHOLES WILL BE SELF CLEANING AND FREE OF AREAS WHERE SOLIDS COULD BE DEPOSITED AS SEWAGE FLOWS THROUGH THE MANHOLE FROM ALL INLET PIPES TO THE OUTLET PIPE. FLOW CHANNELS SHALL BE FORMED TO MATCH THE BOTTOM HALVES OF THE INFLOWING PIPES AND THE OUTFLOWING PIPE AS SHOWN BY THE DRAWINGS EXCEPT FOR INSIDE DROP MANHOLES. FLOW CHANNELS FOR INSIDE DROP MANHOLES SHALL BE CONSTRUCTED AS INDICATED BY THE DRAWING. MANHOLE FLOORS SHALL HAVE SLOPES OF 3 INCHES PER FOOT IN THE AREAS OUTSIDE OF THE FLOW CHANNELS SLOPED TOWARD THE FLOW CHANNELS. PIPES LAID THROUGH MANHOLES SHALL HAVE THE TOP HALF REMOVED TO NEAT LINES FOR THE FULL INSIDE DIAMETER OF THE MANHOLE. MANHOLE FLOORS SHALL THEN BE SHAPED AROUND THE BOTTOM HALF OF THE PIPE WHICH FORMS THE FLOW CHANNEL.

5. PIPES INSTALLED WITHIN THE EXCAVATION MADE FOR THE MANHOLE SHALL BE CRADLED WITH CONCRETE TO THE LIMITS OF THE MANHOLE EXCAVATION. WHEN CLAY PIPE IS USED, THE CRADLE SHALL EXTEND TO THE FIRST JOINT OUTSIDE THE MANHOLE. THE CRADLE SHALL BE TERMINATED AT THE CLAY PIPE JOINT IN A MANNER WHICH WILL MAINTAIN THE FLEXIBILITY OF THE JOINT. COST OF CRADLE WITHIN MANHOLE EXCAVATION OR TO CLAY PIPE JOINTS ADJACENT TO MANHOLE SHALL BE INCLUDED IN THE UNIT PRICE BID FOR THE MANHOLE.

6. MANHOLE COVER CASTINGS AND MANHOLE FRAME CASTINGS SHALL CONFORM TO THE REQUIREMENTS AS INDICATED IN THE STANDARD SPECIFICATIONS AND AS SHOWN IN THE STANDARD DETAIL DRAWING.

7. THE VERTICAL DROP IN INSIDE DROP MANHOLES SHALL NOT EXCEED 4' FOR INFLOWING PIPES SIZED 12" OR SMALLER AND 2' FOR INFLOWING PIPES LARGER THAN 12". THE CROWNS OF INFLOWING PIPES SHALL NEVER BE SET LOWER THAN THE CROWN OF THE OUTFLOWING PIPE.

8. STANDARD MANHOLES TYPE "D" AND STANDARD INSIDE DROP MANHOLES TYPE "D" SHALL BE BID AS STANDARD MANHOLES FOR THE TYPE AND DIAMETER INDICATED. OUTSIDE DROP MANHOLES TYPE "D" SHALL BE BID AS STANDARD OUTSIDE DROP MANHOLES FOR THE TYPE AND DIAMETER INDICATED. ALL MANHOLE DIAMETERS WILL BE 4' UNLESS INDICATED OTHERWISE.

NOTE: EPOXY COATING ON INTERIOR CONCRETE SURFACES MAY BE DELETED WHEN TYPE "D" MANHOLES ARE CONSTRUCTED ON SEWERS WITH DIAMETERS SMALLER THAN 10".

6/19

APRIL 1987 Sht 6 of 9

SEWER APPURTENANCES DETAILS

ADOPTED AS STANDARD DESIGN
BY

City of Wichita, Kansas

STANDARD MANHOLE TYPE "C"

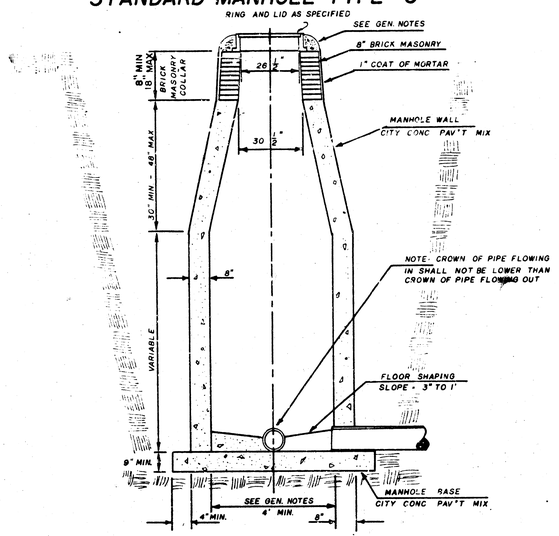

INSIDE DROP MANHOLE TYPE "C"

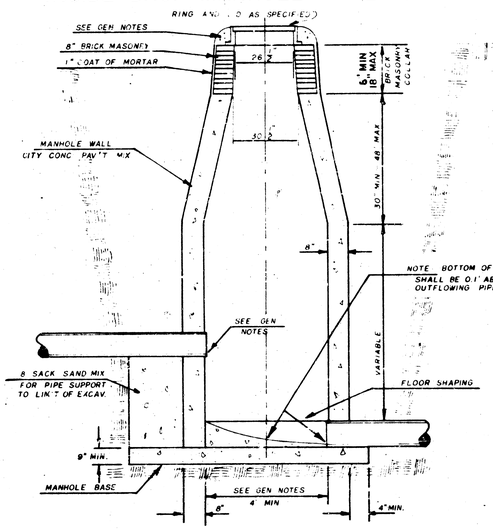

OUTSIDE DROP MANHOLE TYPE "C"

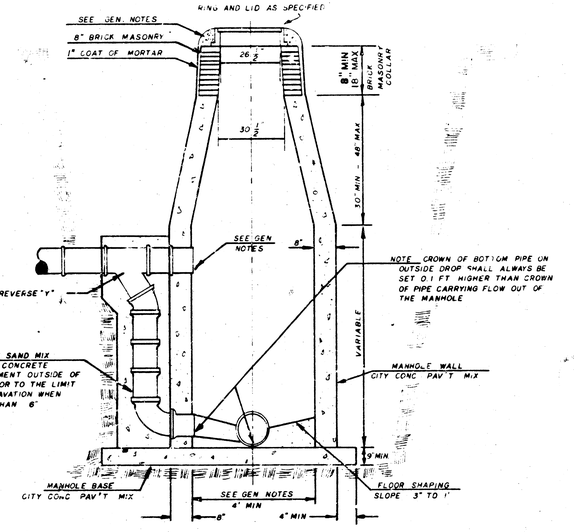

GENERAL NOTES

1. MORTAR USED IN MASONRY CONSTRUCTION SHALL CONTAIN 8 SACKS OF CEMENT PER CUBIC YARD. CONCRETE USED IN MANHOLE WALLS AND BASES SHALL CONFORM TO THE REQUIREMENTS OF CONCRETE FOR CONCRETE PAVEMENT CONSTRUCTION AS SPECIFIED IN THE CITY STANDARD PAVING SPECIFICATIONS USING CITY CONCRETE PAVEMENT MIX WITHOUT AIR ENTRAINING ADMIXTURE. MORTAR SHALL BE PLACED AROUND THE MANHOLE RING AS SHOWN ON THE DRAWINGS WHEN MANHOLES ARE CONSTRUCTED IN UNPAVED AREAS. TYPE "C" MANHOLES CAN BE CONSTRUCTED ONLY WHERE PIPE SIZES ARE 8" OR SMALLER. THE INSIDE DIAMETER OF TYPE "C" MANHOLES SHALL BE 4'. COMPLETED MANHOLE SHALL BE WITHOUT LEAKS AND WATER TIGHT.

2. REINFORCING STEEL SHALL BE INSTALLED IN THE MANHOLE BASE. REINFORCING STEEL SHALL CONSIST OF NO. 4 BARS PLACED ON 6" CENTERS IN BOTH DIRECTIONS. REINFORCING STEEL SHALL BE PLACED 6" ABOVE THE BOTTOM OF THE MANHOLE BASE. COST OF FURNISHING AND INSTALLING REINFORCING STEEL SHALL BE INCLUDED IN THE UNIT PRICE BID FOR THE MANHOLE.

3. AN OPENING SHALL BE CUT IN THE MANHOLE WALL FOR THE UPPER INLET PIPE FOR INSIDE AND OUTSIDE DROP MANHOLES. THE UPPER INLET PIPE SHALL BE GROUTED INTO THIS OPENING WITH NON-SHRINK GROUT. THE EXTERIOR OF THIS COMPLETED CONNECTION SHALL BE SEALED WITH AN APPROVED BITUMINOUS COATING SUCH THAT THE CONNECTION WILL BE WATER TIGHT.

4. THE FLOORS OF ALL MANHOLES SHALL BE SHAPED WITH FLOW CHANNELS SUCH THAT THE MANHOLES WILL BE SELF CLEANING AND FREE OF AREAS WHERE SOLIDS COULD BE DEPOSITED AS SEWAGE FLOWS THROUGH THE MANHOLE FROM ALL INLET PIPES TO THE OUTLET PIPE. FLOW CHANNELS SHALL BE FORMED TO MATCH THE BOTTOM HALVES OF THE INFLOWING PIPES AND THE OUTFLOWING PIPE AS SHOWN BY THE DRAWINGS EXCEPT FOR INSIDE DROP MANHOLES. FLOW CHANNELS FOR INSIDE DROP MAPHOLES SHALL BE CONSTRUCTED AS INDICATED BY THE DRAWING. MANHOLE FLOORS SHALL HAVE SLOPES OF 3 INCHES PER FOOT IN THE AREAS OUTSIDE OF THE FLOW CHANNELS SLOPED TOWARD THE FLOW CHANNELS. PIPES LAID THROUGH MANHOLE SHALL HAVE THE TOP HALF REMOVED TO MEAT LINES FOR THE FULL INSIDE DIAMETER OF THE MANHOLE. MANHOLE FLOORS SHALL THEN BE SHAPED AROUND THE BOTTOM HALF OF THE PIPE WHICH FORMS THE FLOW CHANNEL.

5. PIPES INSTALLED WITHIN THE EXCAVATION MADE FOR THE MANHOLE SHALL BE CRADLED WITH CONCRETE TO THE LIMITS OF THE MANHOLE EXCAVATION. WHEN CLAY PIPE IS USED, THE CRADLE SHALL EXTEND TO THE FIRST JOINT OUTSIDE THE MANHOLE. THE CRADLE SHALL BE TERMINATED AT THE CLAY PIPE JOINT IN A MANNER WHICH WILL MAINTAIN THE FLEXIBILITY OF THE JOINT. COST OF CRADLE WITHIN MANHOLE EXCAVATION OR TO CLAY PIPE JOINTS ADJACENT TO MANHOLE SHALL BE INCLUDED IN THE UNIT PRICE BID FOR THE MANHOLE.

6. MANHOLE COVER CASTINGS AND MANHOLE FRAME CASTINGS SHALL CONFORM TO THE REQUIREMENTS AS INDICATED IN THE STANDARD SPECIFICATIONS AND AS SHOWN IN THE STANDARD DETAIL DRAWING.

7. THE VERTICAL DROP IN INSIDE DROP MANHOLES SHALL NOT EXCEED 4' FOR INFLOWING PIPES SIZED 12" OR SMALLER AND 2' FOR INFLOWING PIPES LARGER THAN 12". THE CROWNS OF INFLOWING PIPES SHALL NEVER BE SET LOWER THAM THE CROWN OF THE OUTFLOWING PIPE.

8. STANDARD MANHOLES TYPE "C" AND STANDARD INSIDE DROP MANHOLES TYPE "C" SHALL BE BID AS STANDARD MANHOLES FOR THE TYPE AND DIAMETER INDICATED. OUTSIDE DROP MANHOLES TYPE "C" SHALL BE BID AS STANDARD OUTSIDE DROP MANHOLES FOR THE TYPE AND DIAMETER INDICATED. ALL MANHOLE DIAMETERS WILL BE 4' UNLESS INDICATED OTHERWISE.

JNL JAN. 1982

7/9

Sht 7 of 9

MANHOLE FRAME AND COVER DETAIL

ADOPTED AS STANDARD DESIGN

BY

City of Wichita, Kansas

MANHOLE COVER

Weight: 180 Lbs.

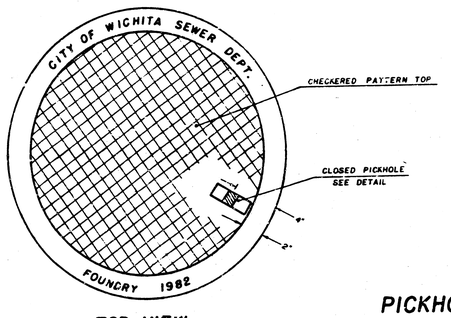

TOP VIEW

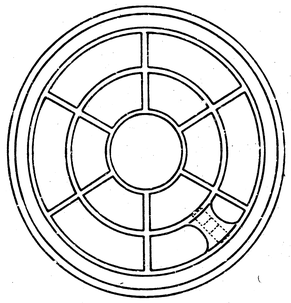

BOTTOM VIEW

PICKHOLE DETAIL

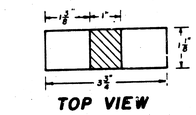

TOP VIEW

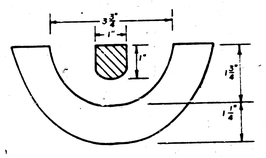

SECTION VIEW

MANHOLE FRAME

Weight: 240 Lbs.

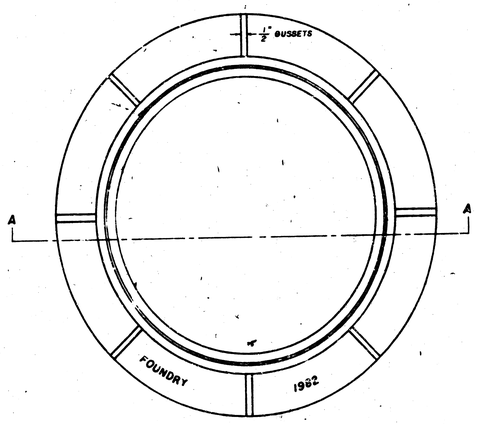

TOP VIEW

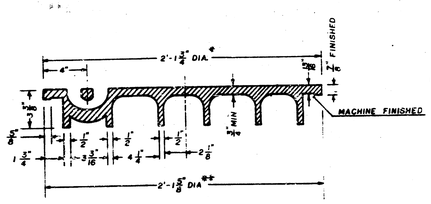

SECTION VIEW

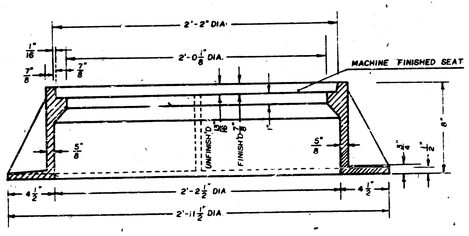

SECTION A-A

* OUTSIDE DIA. TOP OF COVER

** OUTSIDE DIA. BOTTOM OF COVER

GENERAL NOTES

1. MANHOLE CASTINGS SHALL BE MANUFACTURED USING GOOD QUALITY GRAY IRON CONFORMING TO CLASS 30 OF A.S.T.M. DESIGNATION A-48. DIMENSIONS AND WEIGHTS SHOWN ON THE DETAILED DRAWINGS SHALL BE CONSIDERED AS MINIMUM REQUIREMENTS AND ANY DEVIATIONS FROM THE DIMENSIONS SHOWN MUST BE SPECIFICALLY APPROVED. THE FINISHED CASTINGS SHALL BE OF UNIFORM QUALITY, FREE FROM BLOWHOLES, POROSITY, HARD SPOTS, SHRINKAGE DISTORTIONS OR OTHER DEFECTS.

2. MANHOLE CASTINGS SHALL BE COATED WITH AN ASPHALT PAINT RESULTING IN A SMOOTH, TOUGH AND TENACIOUS COATING WHICH IS NOT BRITTLE OR TACKY.

3. MANHOLE CASTINGS SHALL BE MANUFACTURED SUCH THAT A COVER MANUFACTURED BY ANY ONE FOUNDRY WILL FIT INTERCHANGEABLY INTO A FRAME MANUFACTURED BY ANOTHER FOUNDRY AND STILL MEET ALLOWABLE CLEARANCES AND NON-ROCKING REQUIREMENTS. THIS WILL REQUIRE MANUFACTURING OF THE MATCHING FACES ON THE COVER AND THE FRAME TO CLOSE TOLERANCES.

4. THE OUTSIDE CIRCUMFERENCE OF THE VERTICAL FACE OF THE COVER AND THE INSIDE CIRCUMFERENCE OF THE VERTICAL FACE IN THE FRAME RECESS SHALL BE MANUFACTURED TO TOLERANCES SUCH THAT THE CLEARANCE BETWEEN THE COVER AND FRAME WILL NOT EXCEED 1/8" AT ANY POINT AROUND THE CIRCUMFERENCE OF THE COVER. THE SEATING SURFACES BETWEEN THE COVER AND FRAME SHALL BE MACHINED SUCH THAT THESE SURFACES SHALL MAKE FULL CONTACT FOR THEIR FULL CIRCUMFERENCE TO PRECLUDE THE COVER FROM ROCKING IN THE FRAME.

5. THE MANHOLE FRAME AND COVER SHALL BE MARKED WITH LETTERING INDICATING THE NAME OF THE MANUFACTURER AND THE YEAR WHEN THE COVER OR FRAME WAS CAST. THE COVER SHALL BE FURTHER IDENTIFIED WITH REGARDS TO OWNERSHIP USING LETTERS AT LEAST 1" IN HEIGHT. THIS IDENTIFICATION SHALL BE "CITY OF WICHITA SEWER DEPARTMENT". THE WORD DEPARTMENT MAY BE ABBREVIATED. THE TEXTURE OF THE TOP SURFACE OF THE COVER SHALL BE MANUFACTURED IN A CHECKERED PATTERN DESIGN AS INDICATED ON THE DRAWINGS. SMOOTH BLOCKOUTS SHALL BE UTILIZED TO HIGHLIGHT THE LETTERING ON THE COVER SURFACE. THE TOTAL AREA OF SMOOTH SURFACE BLOCKOUT SHALL NOT EXCEED THE AREA AS INDICATED ON THE DRAWING. POSITIONING OF SMOOTH BLOCKOUTS AND LETTERING MAY VARY FROM THAT SHOWN ON THE DETAILED DRAWING.

JNL DEC. 1981

8/9

Sht. 8 of 9

REVISED APRIL, 1980

VERTICAL RISER DETAIL

ADOPTED AS STANDARD DESIGN BY

CITY OF WICHITA, KANSAS

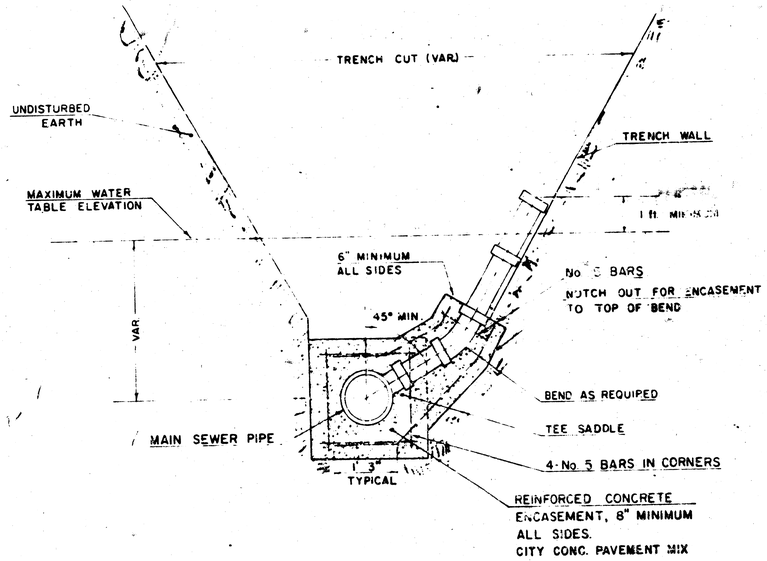

TYPICAL RISER FOR SLOPING TRENCH WALLS

NOTE:
TOP OF 4" OR 6" RISER PIPE TO BE EXTENDED TO AN ELEVATION OF 1 ft. MINIMUM ABOVE THE WATER TABLE ELEVATION, WHEN WATER EXISTS, OR TO AN ELEVATION SUITABLE FOR PROVIDING SERVICE TO THE LOT TO BE SERVED AND THEN PLUGGED.

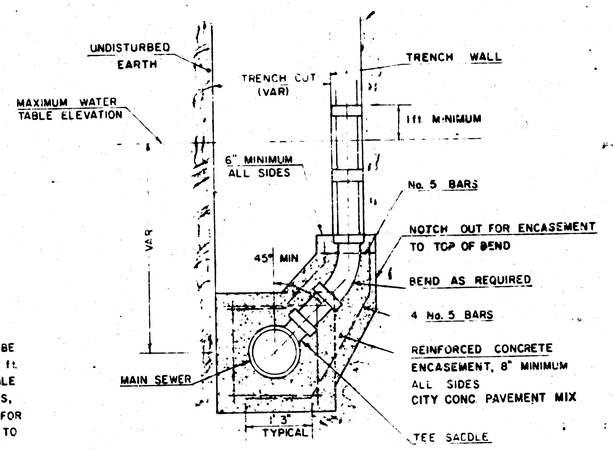

TYPICAL RISER FOR VERTICAL TRENCH WALLS

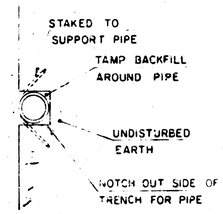

GENERAL NOTE

RISERS SHALL BE USED TO SERVE ALL LOTS OR PARCELS OF LAND WHERE THE MAIN SEWER LINE IS MORE THAN 10 FEET BELOW THE LOWEST POINT AVAILABLE. RISERS SHALL ALSO BE USED TO SERVE ALL LOTS AND TRACTS WHERE THE MAIN SEWER LINE DEPTH IS SUCH THAT IT WOULD MAKE THE BUILDING SEWER TOO DEEP OR DIFFICULT TO CONSTRUCT. THE ALLOCATION OF RISERS BECAUSE OF MAIN LINE SEWER DEPTH SHALL BE AS APPROVED BY THE CITY ENGINEER. THE LOCATION OF RISERS TO SERVE PLATTED PROPERTY SHALL BE APPROVED BY THE SUBDIVIDER/OWNER. PIPE STUBS SHALL BE INSTALLED IN MANHOLES WHERE LOCATIONS OF MANHOLES WILL PROVIDE SATISFACTORY SERVICE. CONSTRUCTIONS MAY BE PERMITTED BY THE FIELD ENGINEER, WHEREBY THE DISTANCE BETWEEN THE FLOW LINE OF THE MANHOLE PIPE STUB AND THE FLOW LINE OF THE MAIN SEWER LINE SHALL NOT EXCEED 10 FEET. MANHOLE PIPE STUBS SHALL NOT BE SET BELOW AN ELEVATION WHICH WILL PERMIT THE TOP OF THE INSIDE OF THE STUB TO MATCH THE TOP OF THE INSIDE OF THE MAIN SEWER PIPE. PIPE STUBS AND RISERS INSTALLED TO SERVE COMMERCIAL OR INDUSTRIAL PROPERTY SHALL BE 6 INCH. PIPE STUBS AND RISERS INSTALLED TO SERVE RESIDENTIAL PROPERTY MAY BE EITHER 4 INCH OR 6 INCH DEPENDING UPON THE AVAILABLE GRADE AND THE SIZE OF THE LOT AS DETERMINED BY THE FIELD ENGINEER. ENCASEMENT OF VITRIFIED CLAY MAIN SEWER PIPE SHALL EXTEND TO THE FIRST JOINT IN THE MAIN SEWER CLAY PIPE ON EACH SIDE OF THE RISER INSTALLATION. ENCASEMENT OF A.B.S. COMPOSITE OR P.V.C. MAIN SEWER PIPE SHALL EXTEND A MINIMUM OF 10 FEET ON BOTH SIDES OF THE CENTERLINE OF THE RISER. FOUR INCH AND SIX INCH RISER PIPE SHALL BE ENCASED AT 4 INCHES TO THE TOP OF THE PIPE AS INDICATED ON THE DRAWINGS. FOUR INCH AND SIX INCH CLAY PIPE USED FOR RISERS SHALL BE EXTRA STRENGTH PIPE CONFORMING TO THE REQUIREMENTS OF THE LATEST REVISION OF A.S.T.M. DESIGNATION C-700 WITH COMPRESSION JOINTS AS SPECIFIED FOR CLAY PIPE IN THE STANDARD SPECIFICATIONS. FOUR INCH AND SIX INCH A.B.S. OR P.V.C. PIPE SHALL BE PIPE APPROVED FOR USE IN THE CITY BY THE CHIEF PLUMBING AND MECHANICAL INSPECTOR FOR THE CENTRAL INSPECTION DIVISION OF THE DEPARTMENT OF HOUSING AND ECONOMIC DEVELOPMENT. LOCATIONS OF THE ENDS OF THE RISERS SHALL BE MARKED BY FASTENING RED COLORED PLASTIC TAPE TO THE END OF THE RISER WHICH SHALL BE BACKFILLED TO THE GROUND SURFACE AS THE EXCAVATION IS BACKFILLED SUCH THAT THE COLORED TAPE WILL BE VISIBLE WHEN THE PROJECT IS COMPLETED. THE ENDS OF THE RISER PIPE AND MANHOLE STUBS SHALL BE CAPPED OR PLUGGED AS SPECIFIED BY THE MANUFACTURER OF THE PIPE. CONSTRUCTION METHODS FOR SUPPORTING AND BACKFILLING RISER PIPE SHALL BE APPROVED BY THE ENGINEER.

FURNISHING AND INSTALLING RISERS SHALL BE PAID FOR AT THE UNIT PRICES BID FOR " PIPE, " PIPE AND REINFORCED CONCRETE ENCASEMENT FOR THE VARIOUS MAIN SEWER PIPE SIZES INDICATED, WHICH PRICE SHALL INCLUDE ALL COSTS FOR COMPLETION OF THIS ITEM INCLUDING SADDLES, WYES, CONCRETE REINFORCING STEEL, CAPS OR PLUGS AND ALL OTHER NECESSARY MATERIALS OR WORK. CONCRETE ENCASEMENT OF THE RISER PIPE AT THE TOP OF THE MAIN AS SHOWN BY THE DRAWINGS WILL NOT BE PAID FOR DIRECTLY AND THE COST FOR THIS WORK SHALL BE CONSIDERED AS SUBSIDIARY TO THE OTHER ITEMS OF WORK.

THE PROJECT INSPECTOR SHALL REPORT ON INSPECTOR CARDS THE LOCATION OF ALL RISERS CONSTRUCTED AS MEASURED FROM THE NEAREST MANHOLE, THE DIRECTION OF SERVICE, THE ELEVATION OF THE TOP OF THE RISER, AND THE PAY QUANTITIES INVOLVED. THE PROJECT INSPECTOR SHALL ALSO REPORT ON INSPECTOR CARDS THE LOCATION, DIRECTION OF SERVICE, AND SIZE OF ALL STUBS INSTALLED IN MANHOLES.

9/9

Sht. 9 of 9 sheets

AT 2 1 3