82607

CONSTRUCTION PLANS FOR

LATERAL 30, MAIN 24

OF THE

WAR INDUSTRIES SEWER

IN

THE CITY OF WICHITA,

SEDGWICK COUNTY, KANSAS

MICHAEL E. LINDEBAK, P.E- CITY ENGINEER

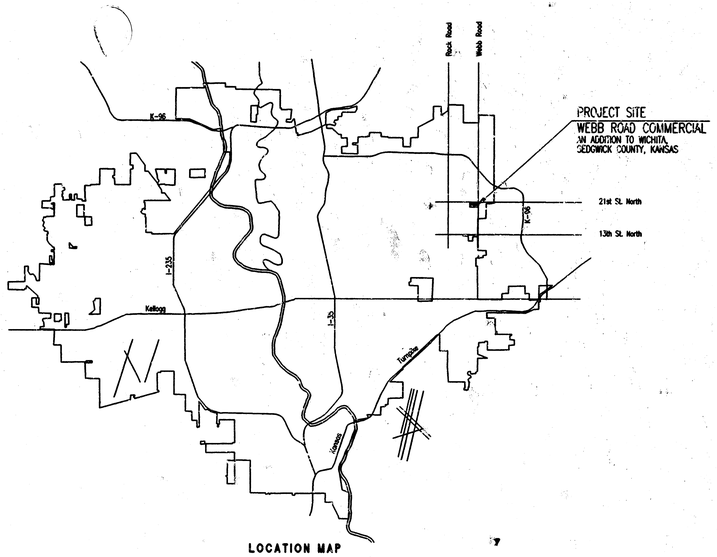

LOCATION MAP

INDEX OF SHEETS

SHEET NO. 1	TITLE SHEET
SHEET NO. 2	KEY MAP AND GENERAL NOTES
SHEET NO. 3-4	PLATS
SHEET NO. 5-7	PLAN/PROFILE
SHEET NO. 8	TYPE "P" MANHOLE DETAILS
SHEET NO. 9	FRAME & COVER DETAIL
SHEET NO. 10	RISER DETAILS

MICHAEL D. KELSEY
LICENSED
13244
KANSAS
PROFESSIONAL ENGINEER
10/15/96

INDEX CODE 742825

CITY OF WICHITA PROJECT NO. 468-76-245-82607-000-000-001

OCTOBER 1996

PLANS PREPARED BY

PROFESSIONAL ENGINEERING CONSULTANTS, P.A.

ENGINEERS

WICHITA, KANSAS

DSNR: DBG OPER: DEP SCALE: 1=1.00
Q:\1996\96549\TITLE.DWG 10-02-1996 12:07:16 pm

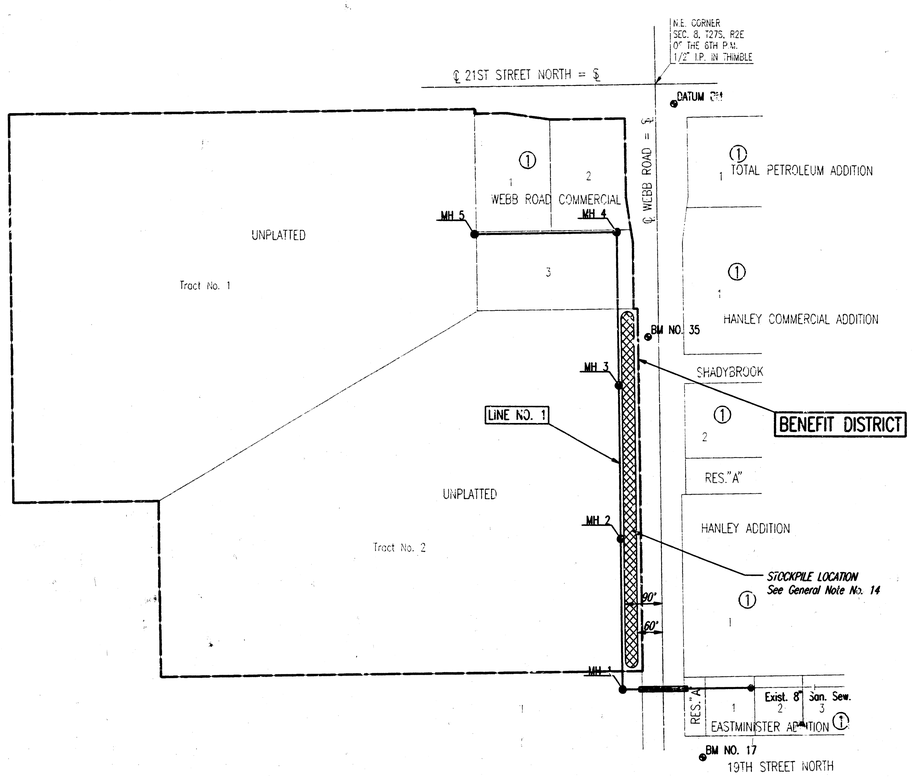

1"=150'

GENERAL NOTES

1. ALL CONSTRUCTION AND MATERIALS TO COMPLY WITH CITY OF WICHITA SPECIFICATIONS AND STANDARDS.
2. ALL ELEVATIONS SHOWN ARE BASED ON CITY OF WICHITA DATUM.
3. THE CONTRACTOR SHALL LIMIT THE EXTENT OF TRENCH TO REMAIN OPEN OVERNIGHT AND WEEKENDS TO LESS THAN 50 FEET.
4. AT LEAST 48 HOURS PRIOR TO BEGINNING EXCAVATION (EXCLUDING WEEKENDS AND HOLIDAYS), THE CONTRACTOR SHALL CONTACT THE KANSAS ONE-CALL SYSTEM, A UTILITY LOCATION SERVICE, AT (316) 687-2470 TO REQUEST THE FOLLOWING UTILITY COMPANIES TO LOCATE ANY EXISTING LINES WITHIN THE PROJECT AREA: KGE (ELECTRIC), PEOPLES NATURAL GAS, THE WICHITA WATER DEPARTMENT, MULTIMEDIA CABLEVISION, KGE (GAS), AND SOUTHWESTERN BELL TELEPHONE.
5. UNDERGROUND UTILITY SERVICE LINES AND OVERHEAD UTILITY POLE LINES ARE TO BE ADJUSTED AS NECESSARY BY OTHERS PRIOR TO CONSTRUCTION UNLESS THE PLANS SPECIFICALLY CALL FOR THEIR ADJUSTMENT BY THE CONTRACTOR OR UNLESS THE PLANS SPECIFICALLY IDENTIFY A UTILITY TO BE ADJUSTED BY ITS OWNER DURING CONSTRUCTION. EXISTING UTILITIES AND THEIR LOCATIONS, AS SHOWN ON THE PLANS, REPRESENT THE BEST INFORMATION OBTAINABLE FOR THE DESIGN. THE CONTRACTOR WILL BE REQUIRED TO WORK AROUND EXISTING UTILITIES WITHIN THE RIGHT-OF-WAY WHICH DO NOT CONFLICT WITH PROPOSED CONSTRUCTION.
6. THE CONTRACTOR SHALL BE RESPONSIBLE FOR PRESERVING PROPERTY IRONS. THE CONTRACTOR WILL BE REQUIRED TO RE-ESTABLISH ANY PROPERTY IRONS WHICH ARE DAMAGED OR DESTROYED BY HIS CONSTRUCTION OPERATIONS. SUCH IRONS SHALL BE RE-ESTABLISHED BY A LICENSED LAND SURVEYOR IN ACCORDANCE WITH STATE LAWS. ALL COSTS FOR THIS WORK SHALL BE SUBSIDIARY TO THE LUMP SUM PRICE BID FOR "SITE RESTORATION".
7. CONTRACTOR SHALL PROVIDE POSITIVE DRAINAGE AWAY FROM ALL MANHOLE COVERS.
8. UNLESS OTHERWISE SPECIFIED ON THE PLANS, MANHOLES MAY BE TYPE "F", "C", OR "D" MANHOLES. MANHOLES SHALL BE CONSTRUCTED IN ACCORDANCE WITH THE STANDARD SPECIFICATIONS AND THE STANDARD DETAIL DRAWINGS.
9. ALL LAWN/TURF AREAS DISTURBED BY CONSTRUCTION OF THE PROPOSED IMPROVEMENTS SHALL BE RESTORED WITH THE SAME GRASS/SOD AS EXISTING. RESTORATION OF DISTURBED AREAS SHALL INCLUDE, BUT NOT BE LIMITED TO, TOP SOIL PREPARATION, SEEDING, MULCH, AND/OR RESEEDING. ALL SEEDING/SODDING WORK SHALL BE IN ACCORDANCE WITH THE CITY OF WICHITA STANDARD SPECIFICATIONS AND THE CITY OF WICHITA ADMINISTRATIVE REGULATION NO. AR78 WHICH COVERS CLEANUP AND RESTORATION OR REPLACEMENT FOLLOWING CONSTRUCTION. ALL COSTS FOR THIS WORK SHALL BE SUBSIDIARY TO THE LUMP SUM PRICE BID FOR "SITE RESTORATION".
10. RUBBLE FROM THE REMOVAL OF MISCELLANEOUS STRUCTURES INCLUDING ANY TREES REMOVED, TREE TRIMMINGS, AND EXCESS EXCAVATION WHICH IS TO BE WASTED SHALL BE DISPOSED OF ON SITES PROVIDED BY THE CONTRACTOR. THESE SITES SHALL ALSO BE APPROVED BY THE ENGINEER AS TO SUITABILITY, APPEARANCE, AND SITE LOCATION. LOCATIONS THAT, IN THE OPINION OF THE ENGINEER, WILL LEAVE AN UNSIGHTLY APPEARANCE WILL NOT BE APPROVED. ALL DISPOSAL SITES MUST BE APPROVED BY THE KANSAS DEPARTMENT OF HEALTH AND ENVIRONMENT. MATERIAL EITHER STOCKPILED OR DISPOSED OF IN A FLOOD PLAIN WILL REQUIRE A KANSAS STATE BOARD OF AGRICULTURE PERMIT. ANY MATERIAL DUMPED IN WATERS OF THE UNITED STATES OR WETLANDS IS SUBJECT TO U.S. CORPS. OF ENGINEERS PERMITTING REGULATIONS. ANY MATERIAL BURIED OR STOCKPILED BEYOND APPROVED CONSTRUCTION LIMITS MAY REQUIRE ARCHAEOLOGICAL INVESTIGATIONS UNLESS BURIED IN A PREVIOUSLY APPROVED DISPOSAL LOCATION.
11. THE CONTRACTOR SHALL AVOID REMOVAL OR TRIMMING OF ANY TREES OR SHRUBS WHERE POSSIBLE. WHERE THE CONTRACTOR BELIEVES THE REMOVAL OR TRIMMING IS UNAVOIDABLE, HE SHALL COORDINATE SUCH WORK WITH THE ENGINEER. COSTS FOR TREE/SHRUB REMOVAL AND TRIMMING REGARDLESS OF SIZE SHALL BE CONSIDERED SUBSIDIARY TO THE LUMP SUM PRICE BID FOR "SITE CLEARING".
12. THE CONTRACTOR SHALL PREVENT ANY CONSTRUCTION DEBRIS FROM ENTERING THE EXISTING SANITARY SEWER DURING CONSTRUCTION.
13. THE CONTRACTOR SHALL GIVE ALL PROPERTY OWNERS AND/OR TENANTS OF DEVELOPED PROPERTY ABUTTING THE CONSTRUCTION OF THIS PROJECT A MINIMUM OF TEN (10) DAYS ADVANCE NOTICE PRIOR TO START OF CONSTRUCTION.
14. ALL APPROVED EXCESS EXCAVATION WHICH IS TO BE WASTED SHALL BE STOCKPILED WITHIN THE AREA SHOWN ON THE KEY MAP AND SHALL BE GRADED SMOOTH, WITH POSITIVE DRAINAGE, AT NO ADDITIONAL COST TO THE OWNER. MAXIMUM HEIGHT OF FILL TO BE 3' AND SHALL HAVE MAX SIDE SLOPE OF 4:1. STOCKPILE LOCATIONS SHALL BE AS DIRECTED BY MR. GEORGE LAHAM, AT 262-6400 AND IN ACCORDANCE WITH GENERAL NOTE NO. 10 ABOVE.
15. CONTRACTOR IS REQUIRED TO MAINTAIN CONTINUOUS FLOW OF SEWAGE IN EXISTING MAINS AT ALL TIMES.
16. THE CONTRACTOR SHALL SEED ALL AREAS DISTURBED BY CONSTRUCTION ACTIVITIES WITH TEMPORARY RYE GRASS. RYE GRASS SEED SHALL BE PLANTED AT A MINIMUM RATE OF SIX (6) POUNDS PER ONE THOUSAND (1,000) SQUARE FEET. THIS TEMPORARY SEEDING MAY BE OMITTED ONLY IF OTHER SEEDING IS REQUIRED IN ACCORDANCE WITH GENERAL NOTE NO. 9 ABOVE. TEMPORARY SEEDING OR PERMANENT SEEDING/SODDING SHALL BE APPLIED WITHIN 14 DAYS AFTER THE AREA HAS BEEN DISTURBED.
17. THE CONTRACTOR SHALL NOT BURY MANHOLES THAT HAVE RIM ELEVATIONS WHICH ARE LOWER THAN EXISTING GROUND AT THE MANHOLE. THE GROUND AROUND SUCH MANHOLES AND ALONG THE SEWER ALIGNMENT SHALL BE BACKFILLED TO THE APPROXIMATE ELEVATION OF THE PROPOSED GROUND ELEVATION SHOWN ON THE PLAN/PROFILE SHEETS. THE CONTRACTOR SHALL PROVIDE DRAINAGE AWAY FROM THESE MANHOLES AND SEWER LINES BY CONSTRUCTION OF TEMPORARY DITCHES OR SLOPING THE GROUND (4:1 MAX.) AS REQUIRED. ALL COSTS FOR THIS WORK SHALL BE CONSIDERED SUBSIDIARY TO THE INSTALLED BID PRICE FOR MANHOLES OR PIPE.
18. INTERURBAN TRAFFIC GENERATED OUTSIDE THE PROJECT AREA AND LOCAL BUSINESS OR RESIDENTIAL TRAFFIC GENERATED WITHIN THE PROJECT AREA ARE TO BE CARRIED THROUGH CONSTRUCTION ACROSS WEBB ROAD AS FURTHER PROMULGATED BY PROJECT SPECIAL PROVISIONS.

SEWER SERVICE TABLE

(See detail and notes, this sheet and sheet no. 10)

NO.	TYPE	LOCATION				FOR INFORMATION ONLY		RECORD INFORMATION (TO BE COMPLETED BY PROJECT INSPECTOR)		NO.
		LOT NO.	BLOCK NO.	LINE NO.	STATION/DIRECTION	APPROXIMATE LENGTH 4" PIPE VERTICAL	HORIZONTAL	DISTANCE FROM NEAREST MANHOLE UPSTREAM	DOWNSTREAM	
1	6" MH Service Conn.			1	3+06/W	9'	2'			1
2	6" MH Service Conn.			1	6+40/W	8'	2'			2
3	6" MH Service Conn.			1	9+80/W	7'	2'			3
4	8"x4" Tee Saddle	3	1	1	12+00/Lt.	6'	4'			4
5	8"x4" Tee Saddle	2	1	1	13+80/Rt.	7'	14'			5
6	8"x4" Tee Saddle	1	1	1	15+20/Rt.	6'	14'			6
7										7
8										8
9										9
10										10

NOTES:

1. Vertical Riser Pipe shall be extended to 2' minimum above ground water elevation and 4' maximum below proposed ground elevation.

BENCH MARKS

DATUM B.M. – CITY OF WICHITA BENCH MARK DISC 44 FEET SOUTH AND 48 FEET EAST OF THE INTERSECTION OF CENTERLINES OF WEBB ROAD AND 21ST STREET NORTH.
ELEV.=205.238 CITY DATUM

B.M. NO. 35 – CHISELED "X" AT WEST TOP OF CURB WEBB ROAD 65' SOUTH OF S.E. CORNER LOT 3, BLOCK 1, WEBB ROAD COMMERCIAL ADDITION, 560' SOUTH OF ℄ 21ST ST. N., AT N.E. CORNER INLET.
ELEV.=198.30 CITY DATUM

B.M. NO. 17 – CHISELED "X" AT TOP OF CURB ℄ WEST END CONCRETE MEDIAN IN 19TH ST. N., EAST SIDE WEBB ROAD.
ELEV.=197.26 CITY DATUM

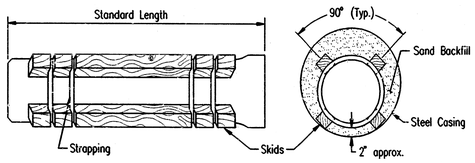

STEEL ENCASEMENT DETAIL

MICHAEL D. KELSEY
LICENSED
13944
PROFESSIONAL ENGINEER
10/15/96

No.	Revision	By	Date

LATERAL 30, MAIN 24 OF THE
WAR INDUSTRIES SEWER

KEY MAP AND GENERAL NOTES

MICHAEL E. LINDEBAK, P.E.– CITY ENGINEER
CITY OF WICHITA PROJECT NO. 468-76-245-82607-000-000-001

PROFESSIONAL ENGINEERING CONSULTANTS, P.A.
ENGINEERS
WICHITA, KANSAS

Designed by	DRC	Job No.	96549	Sht. 2 of 10
Drawn by	DCP	Date	Oct. 1996	

DSNR: DRC OPER: DEP SCALE: 1=150.00
Q:\1996\96549\KEYMAP.DWG 10-02-1996 12:10:13 pm

WEBB ROAD COMMERCIAL ADDITION

TO WICHITA, SEDGWICK COUNTY, KANSAS

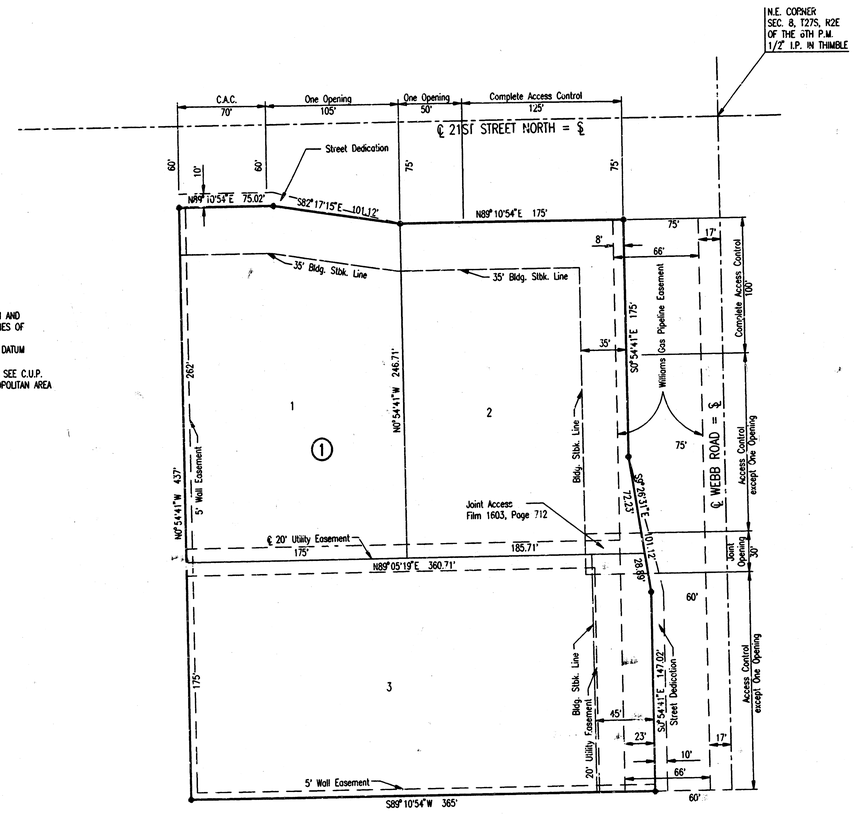

SCALE: 1"=50'

o = IRON SET

B.M. – CITY OF WICHITA BENCH MARK DISC 44 FEET SOUTH AND 48 FEET EAST OF THE INTERSECTION OF CENTERLINES OF WEBB ROAD 21ST STREET NORTH.
ELEV.=205.238 CITY DATUM

FOR ADDITIONAL INFORMATION AND BUILDING SETBACK LINES SEE C.U.P. DP-200 ON FILE AT THE WICHITA-SEDGWICK COUNTY METROPOLITAN AREA PLANNING DEPARTMENT, WICHITA, KANSAS.

No.	Revision	By	Date

LATERAL 30, MAIN 24 OF THE
WAR INDUSTRIES SEWER

PLAT

MICHAEL F. LINDEBAK, P.E.– CITY ENGINEER
CITY OF WICHITA PROJECT NO. 468-76-245-82607-000-000-001

PROFESSIONAL ENGINEERING CONSULTANTS, P.A.
ENGINEERS
WICHITA, KANSAS

Designed by	Job No. 96549	Sht. 3 of 10
Drawn by DEP	Date Oct. 1996	

DGN: DRC OPER: DEP SCALE: 1=50.00
C:\11-96\96549\PLAT.DWG 10-02-1996 12:11:06 pm

A 5-40

FINAL PLAT OF

EASTMINSTER

AN ADDITION TO WICHITA, SEDGWICK COUNTY, KANSAS

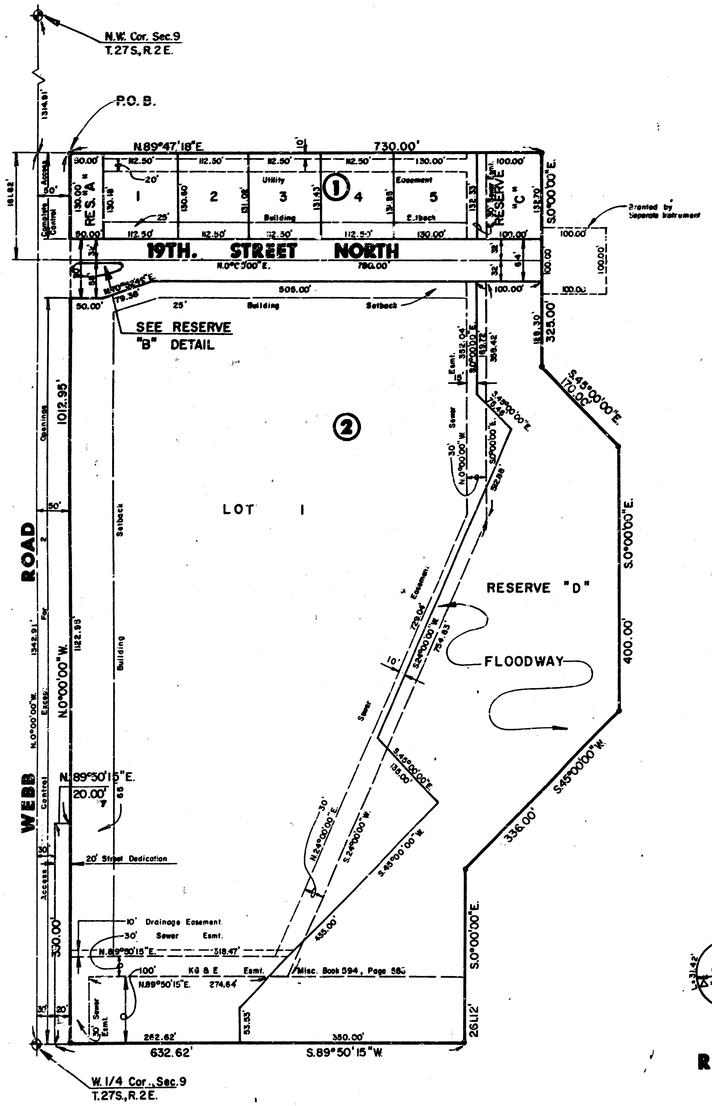

Scale: 1"=100'

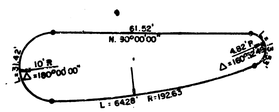

RESERVE "B" DETAIL

I, Kenneth H. Bengtson, a Civil Engineer in Kansas, do hereby certify that I have been in responsible charge of surveying and platting of "EASTMINSTER", an addition to Wichita, Sedgwick County, Kansas into Lots, Blocks, Streets and Reserves, the same being accurately set forth in the accompanying plat and described as follows:

A tract of land lying within the northwest quarter of Section 9, Township 27 south, Range 2 east of the 6th P.M., more particularly described as follows:

Commencing at the northwest corner of said northwest quarter; thence on an assumed bearing S 00° 00' 00" E, 1314.91 feet along the west line of said northwest quarter to a point 1342.91 feet north of the southwest corner of said northwest Quarter; thence N 89° 47' 18" E, 50.00 feet parallel and 14.00 feet north of the north line of the southwest quarter of said northwest quarter to the point of beginning; thence N 89° 47' 18" E, 730.00 feet parallel and 14.00 feet north of the north line of the southwest quarter of said northwest quarter; thence S 00° 00' 00" E, 325.00 feet; thence S 45° 00' 00" E, 170.00 feet; thence S 00° 00' 00" E, 400.00 feet; thence S 45° 00' 00" W, 336.00 feet; thence S 00° 00' 00" E, 261.12 feet to a point on the south line of said northwest quarter; thence along the south line of said northwest quarter S 89° 50' 15" W, 632.62 feet to a point 30.00 east of the west line of said northwest quarter; thence N 0° 00' 00" E, 330.00 feet parallel and 30.00 feet east of the west line of said northwest quarter; thence N 89° 50' 15" E, 20.00 feet to a point 50.00 feet east of the west line of said northwest quarter; thence N 0° 00' 00" E, 1012.95 feet parallel and 50.00 feet east of the west line of said northwest quarter to the point of beginning.

I hereby certify that the details of this plat are correct to the best of my knowledge and belief this 5 day of March, 1986.

Kenneth H. Bengtson, P.E.
Mid-Kansas Engineering Consultants, P.A.
3500 N. Rock Road, Bldg. 800
Wichita, KS 67226

Know all men by these presents that we the undersigned property owners of the lant as above set forth in the Civil Engineers Certificate, have caused the same to be surveyed and platted into Lots, Blocks, Streets, and Reserves, the same to be known as "EASTMINSTER", an addition to Wichita, Sedgwick County, Kansas. The streets are hereby dedicated to and for the use of the public. Easements for the construction and maintenance of public utilities and drainage, as indicated on the accompanying plat are hereby granted. Reserves "A", "B", "C", & "D", are platted for construction and maintenance of public utilities and landscaping. Reserves "A" and "B" are also platted for entry monuments. Reserve "C" is also platted for drainage. Reserves "D" is platted for floodway purposes. All reserves shall be owned and maintained by the Homeowners Association. The floodways shall be the responsibility of the owners until such time as the governing body exercising jurisdiction elects to assume the responsibility for the maintenance and improvement of the drainage, provided further, that no structure shall be constructed on or within said floodway, nor shall any fill, change of grade, creation of channel or other work be carried on without the permission of the City Engineer. All abutters' rights of access to or from Webb Road over and across the west line of Lot 1, Block 2 and the west line of Reserve "A" of "EASTMINSTER" are hereby granted to the City of Wichita, Kansas except Lot 1, Block 2 shall have access at two locations to Webb Road as determined by the City Engineer.

Eastminster United Presbyterian Church

By: William A. Boettger, President
Board of Trustees

STATE OF KANSAS)
) SS:
SEDGWICK COUNTY)

Be it remembered that on this 5th day of March, 1986, before me a Notary Public in and for said State and County, came William A. Boettger, President, Board of Trustees, on behalf of Eastminster United Presbyterian Church, to me personally known to be the same person who executed the foregoing instrument of writing and duly acknowledged the execution of the same. In testimony whereof I have hereunto set my hand and affixed my notarial seal the day and year above written.

Mary Ellen Bitzenger, Notary Public
My Appointment Expires: 1-31-87

This plat of "EASTMINSTER" has been submitted to and approved by the Wichita-Sedgwick County Metropolitan Area Planning Commission, Wichita, Kansas.

Dated this 20th day of February, 1986.

WICHITA-SEDGWICK COUNTY METROPOLITAN AREA PLANNING COMMISSION

William J. Goebel, Chairman

Michael E. Lindebak, Secretary

This plat approved and all dedications shown hereon, if any, accepted by the City Commission of the City of Wichita, Kansas, this 18th day of March, 1986.

Robert L. Brown, Mayor

Donald C. Bisick, City Clerk

Entered on transfer record this 25 day of March, 1986.

Don Wright, County Clerk
Jim Powell

STATE OF KANSAS)
) SS:
SEDGWICK COUNTY)

This is to certify that this instrument was filed for record in the Register of Deeds office this 25th day of March, 1986.

Pat Kettler, Register of Deeds

Ed Resa, Deputy

79632

Restrictive Covenant F 717 B 1216

Sheet 4 of 10

A 5-40

SCALE: 1"=40'

Sta. 0+00.0
Existing MH. Core MH wall and install new 8" Pipe. Grout pipe in place, watertight, with non-shrink grout. Reshape MH invert to provide smooth flow. Cost Subsidiary to other bid items.

CAUTION !!! 19TH STREET NORTH
Buried Telephone (Fiber Optic) (Southwestern Bell)
Contractor to support Tel. Cables in place during construction and protect from damage.

S.E. Corner Sec. 8, T27S, R1E of the 6th P.M.

BM#17

Telephone Marker

EASTMINISTER ADDITION

3/4" I.P.

RESERVE "A"

Exist. 30" Wyes

Curb Inlet
Top=194.30
E In=193.00(N)
E In=192.05(E)
E Out=192.05(S)

18" RCP

Fiber Optic

Sidewalk

Wire Fence

16" Williams Natural Gas Pipeline Easement

CAUTION !!! 6" Gas Line (KGE Gas)

CAUTION !!! 30" Waterline

CHIS "+"

UNPLATTED

CAUTION !!! 16" H.P. Gas Line (Williams)

Sta. 3+06.4
Construct MH 1
Standard MH

48"

90°00'00"

90°00'00"

20' Utility Easement

12" Willow

15" Sugar Orange at 15' ctrs.

15" Sugar Orange at 10' ctrs.

Wire Fence

20' Utility Easement
(By Separate Instrument)

35'x35' Utility Easement

Install 306.4 L.F.
8" PVC Pipe

RESERVE "A"

HANLEY ADDITION

Restrain Utility Pole in place by utility company, at the utility company expense. Contractor shall contact Mr. Don Morgan with KGE Electric at 261-6434 to schedule this work at least 2 weeks prior to construction.

6" KGE Gas

Guy

Guy

Pole

Wire Fence

Sidewalk

℄ WEBB RD. = ℄

CAUTION !!! 18" RCP Storm Sewer

50' R/W

Curb Inlet
Top=197.53
E Out=193.18(S)

Sta. 1+50 to Sta. 2+65
Install 115 L.F. 18" I.D.(min.)
Steel Casing by Boring
See Detail, Sh. No. 2

N.E. Corner Sec. 8, T27S, R1E of the 6th P.M.

DENOTES SEWER SERVICE
SEE SH. NOS. 2 AND 10 FOR SEWER SERVICE SCHEDULE AND DETAILS.

MICHAEL D. KELBER LICENSED 13944 KANSAS PROFESSIONAL ENGINEER
10/15/96

PLAN | CHECKED | CHECKED | BY | DATE

PROFILE | CHECKED | CHECKED | BY | DATE

Existing MH
Top Elev = 193.3

+58 Lead Pipe Guard (S.W. Bell)
Depth Unknown
+60 Existing Utility Pole
Bottom Unknown
Top of Pipe = 193.66
+73 Existing 30" Waterline
Top of Pipe = 192.92

+39 Existing 18" RCP SWS
E=190.76
+57 Existing 15" Steel Gas Line
Top of Pipe = 194.7

MH 1
Top Elev = 199.2

Existing Ground

Top Casing=186.91

Top Casing=186.26

E In= 184.74
(6"KGW)

E In= 185.32
(6"KGW)

E Out= 184.04
E In= 184.4

306.4 L.F. 8" PVC Pipe
@ 0.10%

E Out= 185.06
E In= 185.16

210 205 200 195 190 185 180 175 170

0+00 1+00 2+00 3+00 4+00

LATERAL 30, MAIN 24 OF THE WAR INDUSTRIES SEWER

LINE NO. 1

MICHAEL E. LINDEBAK, P.E.– CITY ENGINEER
CITY OF WICHITA PROJECT NO. 468-76-245-82607-000-000

PROFESSIONAL ENGINEERING CONSULTANTS, P.A.
ENGINEERS
WICHITA KANSAS

Designed By DEP | Drawn By DEP | Job No. 96549 | Date Oct. 1996

Sheet 5 of 10

DSWR: DRC OPER: DMR SCALE: 1=40.00
Q:\1996\96549\SSPP1.DWG 10-14-1996 3:36:27 pm

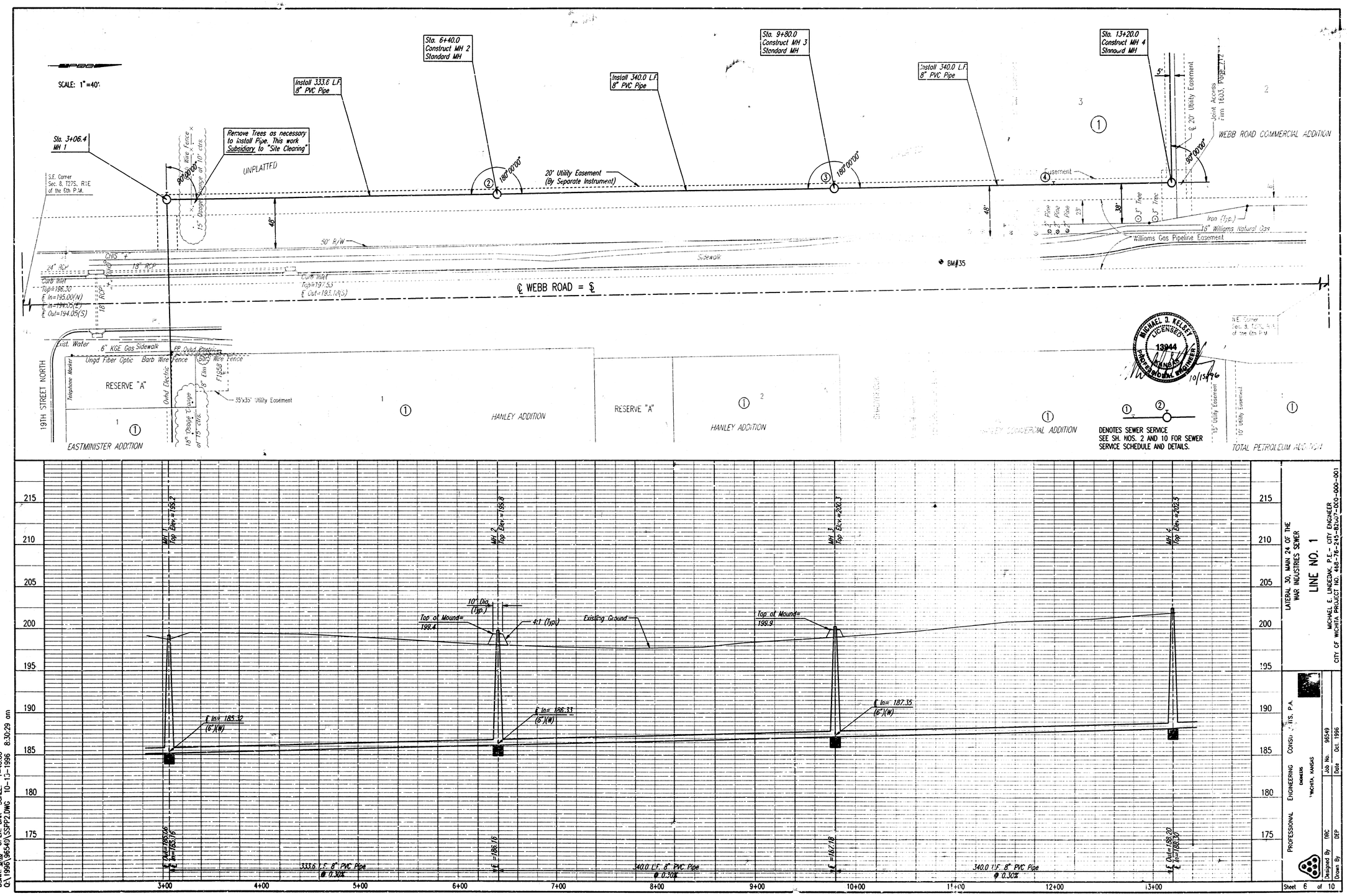
SCALE: 1"=40'
Sta. 3+06.4
MH 1
S.E. Corner
Sec. 8, T27S, R1E
of the 6th P.M.
Remove Trees as necessary to install Pipe. This work Subsidiary to "Site Clearing"
Install 333.6 L.F. 8" PVC Pipe
Sta. 6+40.0
Construct MH 2
Standard MH
Install 340.0 L.F. 8" PVC Pipe
Sta. 9+80.0
Construct MH 3
Standard MH
Install 340.0 L.F. 8" PVC Pipe
Sta. 13+20.0
Construct MH 4
Stimpsord MH
UNPLATTED
20' Utility Easement
(By Separate Instrument)
WEBB ROAD COMMERCIAL ADDITION
Joint Access
Book 16603, Page 174
℄ 20' Utility Easement
Easement
50' R/W
Sidewalk
BM#35
Williams Gas Pipeline Easement
18" Williams Natural Gas
Iron (Typ.)
℄ WEBB ROAD = ℄
Curb Inlet
Top=196.30
℄ In=195.00(N)
℄ In=194.05(E)
℄ Out=194.05(S)
Curb Inlet
Top=197.53
℄ Out=193.18(S)
Exist. Water
6" KGE Gas
Sidewalk
PP Ovhd Entrance
Ungd Fiber Optic
Barb Wire Fence
Barb Wire Fence
19TH STREET NORTH
RESERVE "A"
Telephone Marker
Ovhd Electric
35'x35' Utility Easement
EASTMINISTER ADDITION
HANLEY ADDITION
RESERVE "A"
HANLEY ADDITION
HANLEY COMMERCIAL ADDITION
TOTAL PETROLEUM ADDITION
MICHAEL D. KELSEY
LICENSED
13944
KANSAS
PROFESSIONAL ENGINEER
10/15/96
DENOTES SEWER SERVICE
SEE SH. NOS. 2 AND 10 FOR SEWER
SERVICE SCHEDULE AND DETAILS.
MH 1
Top Elev.=199.2
MH 2
Top Elev.=199.8
MH 3
Top Elev.=200.3
MH 4
Top Elev.=202.5
10' Dia.
(Typ.)
4:1 (Typ.)
Top of Mound=
199.4
Existing Ground
Top of Mound=
199.9
℄ In= 185.32
(6")(W)
℄ In= 186.33
(6")(W)
℄ In= 187.35
(6")(W)
333.6 L.F. 8" PVC Pipe
@ 0.30%
340.0 L.F. 8" PVC Pipe
@ 0.30%
340.0 L.F. 8" PVC Pipe
@ 0.30%
3+00
4+00
5+00
6+00
7+00
8+00
9+00
10+00
11+00
12+00
13+00
215
210
205
200
195
190
185
180
175
LATERAL 30, MAIN 24 OF THE
WAR INDUSTRIES SEWER
LINE NO. 1
MICHAEL E. LINGELBAK, P.E., CITY ENGINEER
CITY OF WICHITA, PROJECT NO. 468-76-245, B2U0-CKO-000-001
PROFESSIONAL ENGINEERING CONSULTANTS, P.A.
WICHITA, KANSAS
Job No. 96549
Date Oct. 1996
Designed By DRC
Drawn By DEP
Sheet 6 of 10
PLAN
PROFILE
CHECKED
DATE
BY
DSNR: DRC OPER: DAR SCALE: 1=40.00
Q:\1996\96549\SSPP2.DWG 10-13-1996 8:30:29 am

SCALE: 1"=40'

HANLEY COMMERCIAL ADDITION

TOTAL PETROLEUM ADDITION

WEBB ROAD COMMERCIAL ADDITION

UNPLATTED

UNPLATTED

℄ WEBB ROAD = ⅀

Sta. 13+20.0
MH 4

Install 332.0 L.F.
8" PVC Pipe

20'x20' Utility Easement
(By Separate Instrument)

20'x20' Utility Easement
(By Separate Instrument)

Sta. 16+52.0
Construct MH 5
Standard MH

5' Walk Easement

20' Utility Easement

5' Utility Easement

10' Utility Easement

Williams Gas Pipeline Easement

15" Williams Natural Gas

2" Tree
2" Pine
2" Tree
3" Pine
2" Pine
2" Pine
3" Tree
3" Tree

23'
8'
5'
5'
5'
90°00'00"

DENOTES SEWER SERVICE
SEE SH. NOS. 2 AND 10 FOR SEWER SERVICE SCHEDULE AND DETAILS.

MICHAEL D. KEIBER
LICENSED
13944
KANSAS
PROFESSIONAL ENGINEER
10/15/96

PLAN		BY	DATE
	CHECKED		
	CHECKED		

PROFILE		BY	DATE
	CHECKED		
	CHECKED		

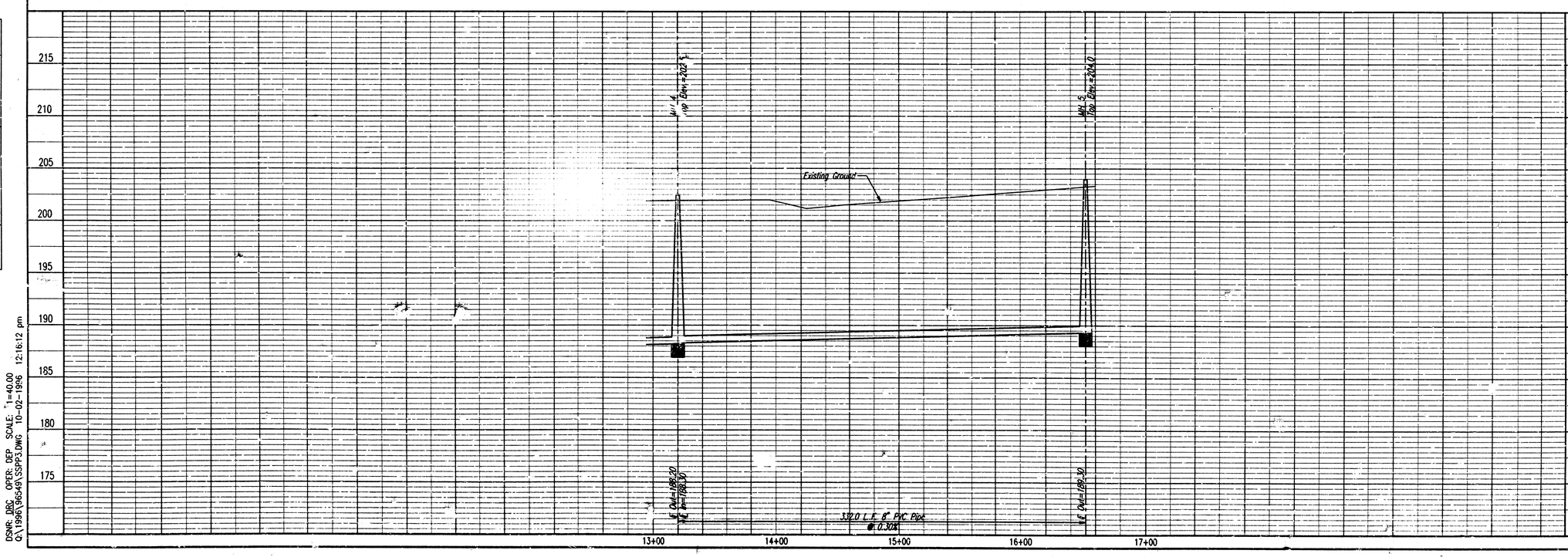

LATERAL 30, MAIN 24 OF THE
WAR INDUSTRIES SEWER

LINE NO. 1

MICHAEL E. LINDEBAK, P.E.– CITY ENGINEER
CITY OF WICHITA PROJECT NO. 468-76-243-62607-000-000-001

PROFESSIONAL ENGINEERING CONSULTANTS, P.A.
DONELSON
WICHITA, KANSAS

Designed By	DRC	Job No.	96549
Drawn By	DEP	Date	Oct. 1996

Sheet 7 of 10

DSNR: DRC OPER: DEP SCALE: 1"=40.00
Q:\1996\96549\SSPP3.DWG 10-02-1996 12:16:12 pm

SEWER APPURTENANCES DETAILS

ADOPTED AS STANDARD DESIGN
BY
CITY OF WICHITA

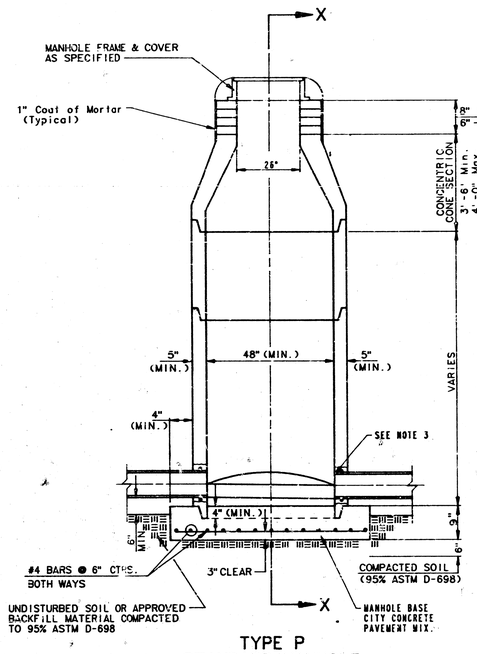

TYPE P
STANDARD MANHOLE

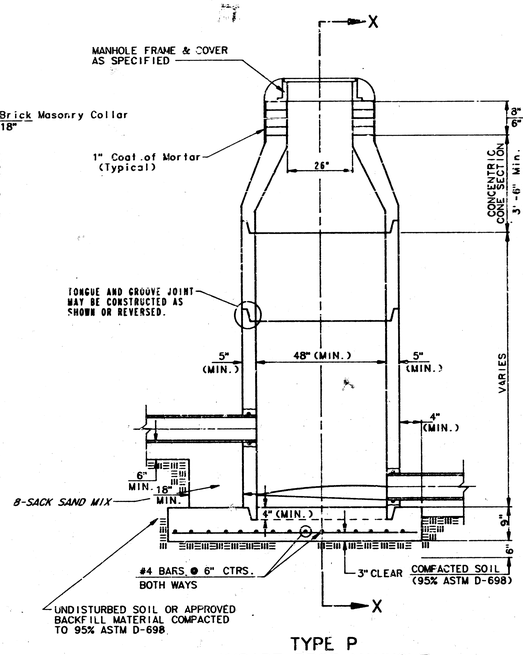

TYPE P
INSIDE DROP MANHOLE

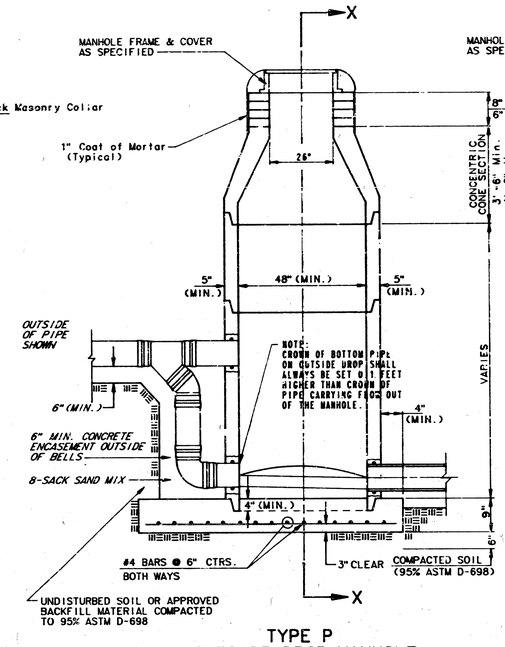

TYPE P
OUTSIDE DROP MANHOLE

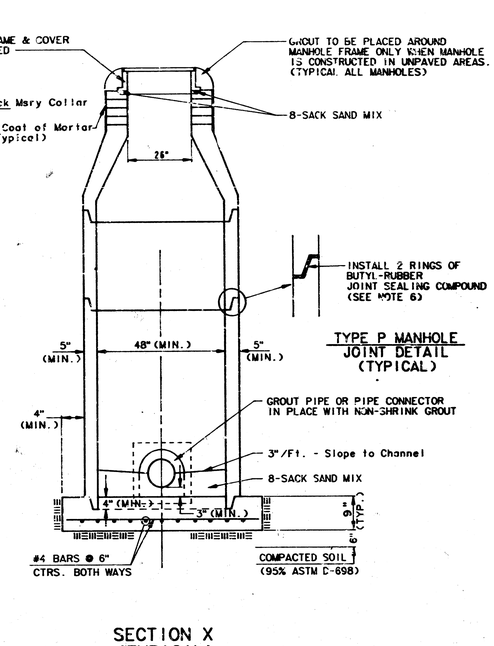

TYPE P MANHOLE
JOINT DETAIL
(TYPICAL)

SECTION X
(TYPICAL)

GENERAL NOTES

PRECAST MANHOLE NOTES

1. ALL PRECAST CONCRETE MANHOLE SECTIONS SHALL CONFORM TO THE LATEST REVISION OF A.S.T.M. C478 AS MODIFIED BY THE SPECIFICATIONS.

2. NON-SHRINK GROUT SHALL BE NON-METALLIC TYPE.

3. APPROVED FLEXIBLE WATERSTOP GASKETS SHALL BE INSTALLED TO JOIN THE SEWER TO THE MANHOLE WALL WHEN A.B.S. COMPOSITE PIPE OR P.V.C. PIPE IS USED. FOR OTHER TYPES OF PIPE THE SEWER SHALL BE GROUTED IN PLACE WITH NON-SHRINK GROUT. THE SEWER PIPE SHALL BE SUPPORTED WITH CONCRETE ENCASEMENT A MINIMUM OF 3 FEET FROM THE MANHOLE WALL AND TO THE FIRST JOINT FOR V.C.P. SUCH THAT THE JOINT REMAINS FLEXIBLE.

4. ALL INSIDE SURFACES OF THE CONCRETE MANHOLE WHICH WOULD BE EXPOSED TO SEWER GAS SHALL BE COATED WITH 2 COATS THEMEC SERIES 66 HI-BUILD EPOXOLINE, DRY THICKNESS OF 8 MILS (MIN.)

5. EXTERIOR MANHOLE WALLS SHALL BE COATED WITH 1 COAT MOBILARMA 633 BITUMINUS COATING.

6. JOINT SEALING COMPOUND SHALL BE KENT SEAL NO. 2 OR APPROVED EQUAL.

7. PRECAST MANHOLES SHALL BE SET AT LEAST 4 INCHES INTO THE MANHOLE BASE.

8. TOP OF MANHOLE FLOOR SLAB SHALL BE AT LEAST 3 INCHES BELOW THE FLOW LINE OF THE OUTLET PIPE TO INSURE SUFFICIENT MINIMUM THICKNESS OF SHAPED INVERT.

9. LIFTING HOLES SHALL BE FILLED WITH NON-SHRINK GROUT AND THE INTERIOR SURFACE COATED AS SPECIFIED.

10. MORTAR USED IN MASONRY CONSTRUCTION SHALL CONTAIN 8 SACKS OF CEMENT PER CUBIC YARD. CONCRETE USED IN MANHOLE BASES SHALL CONFORM TO THE REQUIREMENTS OF CONCRETE FOR CONCRETE PAVEMENT CONSTRUCTION AS SPECIFIED IN THE CITY STANDARD PAVING SPECIFICATIONS USING CITY CONCRETE PAVEMENT MIX WITHOUT AIR ENTRAINING ADMIXTURE. MORTAR SHALL BE PLACED AROUND THE MANHOLE RING AS SHOWN ON THE DRAWINGS WHEN MANHOLES ARE CONSTRUCTED IN UNPAVED AREAS. MANHOLES CONSTRUCTED WHERE PIPE SIZES ARE SMALLER THAN 24" SHALL HAVE AN INSIDE DIAMETER OF 4'. MANHOLES CONSTRUCTED WHERE PIPE SIZES ARE 24" OR LARGER SHALL HAVE AN INSIDE DIAMETER OF 5'. COMPLETED MANHOLE SHALL BE WITHOUT LEAKS AND WATER TIGHT.

11. REINFORCING STEEL SHALL BE INSTALLED IN THE MANHOLE BASES AND SHALL CONSIST OF NO. 4 BARS PLACED ON 6" CENTERS IN BOTH DIRECTIONS. THE MANHOLE BASE REINFORCEMENT SHALL BE PLACED AT LEAST 3" ABOVE THE BOTTOM OF THE MANHOLE BASE. ALL COSTS FOR FURNISHING AND INSTALLING REINFORCING STEEL SHALL BE INCLUDED IN THE UNIT PRICE BID FOR THE MANHOLE.

12. OPENINGS SHALL BE CUT INTO THE MANHOLE WALL WHEN OUTSIDE DROPS ARE CONSTRUCTED ON EXISTING MANHOLES. SUCH OPENINGS CUT INTO EXISTING MANHOLES SHALL BE AS SMALL AS PRACTICAL TO FACILITATE INSTALLING AND GROUTING THE NEW PIPE IN PLACE. WATERSTOP GASKETS SHALL BE USED WITH P.V.C. AND A.B.S. COMPOSITE PIPE. THE NEW PIPE SHALL BE GROUTED INTO THE OPENING USING AN APPROVED NONSHRINK GROUT FOR THE FULL MANHOLE WALL THICKNESS. THE EXTERIOR OF THE COMPLETED CONNECTION SHALL BE SEALED WITH AN APPROVED BITUMINOUS COATING SUCH THAT THE CONNECTION WILL BE WATER TIGHT. FLOOR OF MANHOLE SHALL BE MODIFIED TO FORM NEW FLOW CHANNEL FOR THE NEW CONNECTION AS INDICATED BY THE DRAWING. THIS WORK, INCLUDING MODIFICATION OF MANHOLE FLOOR, SHALL BE PAID FOR AT THE UNIT PRICE BID FOR OUTSIDE DROP STACK CONSTRUCTED ON EXISTING MANHOLE.

13. THE FLOORS OF ALL MANHOLES SHALL BE SHAPED WITH FLOW CHANNELS SUCH THAT THE MANHOLES WILL BE SELF CLEANING AND FREE OF AREAS WHERE SOLIDS COULD BE DEPOSITED AS SEWAGE FLOWS THROUGH THE MANHOLE FROM ALL INLET PIPES TO THE OUTLET PIPE. FLOW CHANNELS SHALL BE FORMED TO MATCH THE BOTTOM HALVES OF THE INFLOWING PIPES AND THE OUTFLOWING PIPE AS SHOWN BY THE DRAWINGS EXCEPT FOR INSIDE DROP MANHOLES. FLOW CHANNELS FOR INSIDE DROP MANHOLES SHALL BE CONSTRUCTED AS INDICATED BY THE DRAWING. MANHOLE FLOORS SHALL HAVE SLOPES OF 3 INCHES PER FOOT IN THE AREAS OUTSIDE OF THE FLOW CHANNELS SLOPED TOWARD THE FLOW CHANNELS. PIPES LAID THROUGH MANHOLES SHALL HAVE THE TOP HALF REMOVED TO NEAT LINES FOR THE FULL INSIDE DIAMETER OF THE MANHOLE. MANHOLE FLOORS SHALL THEN BE SHAPED AROUND THE BOTTOM HALF OF THE PIPE WHICH FORMS THE FLOW CHANNEL.

14. PIPES INSTALLED WITHIN THE EXCAVATION MADE FOR THE MANHOLE SHALL BE CRADLED WITH CONCRETE TO THE LIMITS OF THE MANHOLE EXCAVATION. WHEN CLAY PIPE IS USED, THE CRADLE SHALL EXTEND TO THE FIRST JOINT OUTSIDE THE MANHOLE. THE CRADLE SHALL BE TERMINATED AT THE CLAY PIPE JOINT IN A MANNER WHICH WILL MAINTAIN THE FLEXIBILITY OF THE JOINT. COST OF CRADLE WITHIN MANHOLE EXCAVATION OR TO CLAY PIPE JOINTS ADJACENT TO MANHOLE SHALL BE INCLUDED IN THE UNIT PRICE BID FOR THE MANHOLE.

15. MANHOLE COVER CASTINGS AND MANHOLE FRAME CASTINGS SHALL CONFORM TO THE REQUIREMENTS AS INDICATED IN THE STANDARD SPECIFICATIONS AND AS SHOWN IN THE STANDARD DETAIL DRAWING.

16. THE VERTICAL FREE FALL DROP INSIDE MANHOLES SHALL NOT EXCEED 2'.

THE CROWNS OF INFLOWING PIPES SHALL NEVER BE SET LOWER THAN THE CROWN OF THE OUTFLOWING PIPE.

17. STANDARD MANHOLES AND STANDARD INSIDE DROP MANHOLES SHALL BE BID AS STANDARD MANHOLES FOR THE TYPE AND DIAMETER INDICATED. OUTSIDE DROP MANHOLES SHALL BE BID AS STANDARD OUTSIDE DROP MANHOLES FOR THE TYPE AND DIAMETER INDICATED. ALL MANHOLE DIAMETERS WILL BE 4' UNLESS INDICATED OTHERWISE.

18. A BRICK MASONRY COLLAR SHALL BE INSTALLED BETWEEN THE CAST IRON FRAME AND THE CONCENTRIC CONE. THE COLLAR WILL HAVE 8" WALLS AND A VERTICAL HEIGHT OF 6" MINIMUM AND 18" MAXIMUM. A 1" COAT OF MORTAR WILL BE PLASTERED ON THE OUTSIDE OF THE COLLAR.

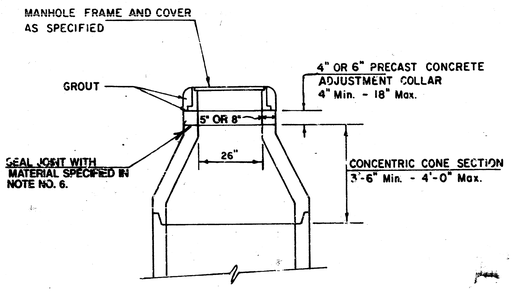

ALTERNATE CONSTRUCTION
IN UNPAVED AREAS

Sheet 8 of 10
REVISED NOV. 1993
NOTE NO. 18 REVISED JAN. 1991
Revised 3-21-89
Revised 8-10-88
Revised: June 12 1986

[redacted]

MANHOLE FRAME AND COVER DETAIL

ADOPTED AS STANDARD DESIGN BY
CITY OF WICHITA, KANSAS

MANHOLE COVER
Weight = 180 Lbs.

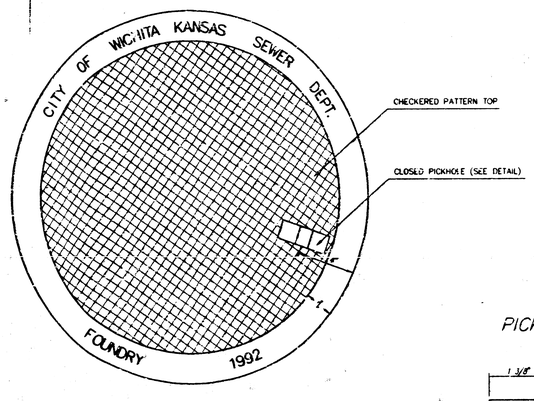

TOP VIEW

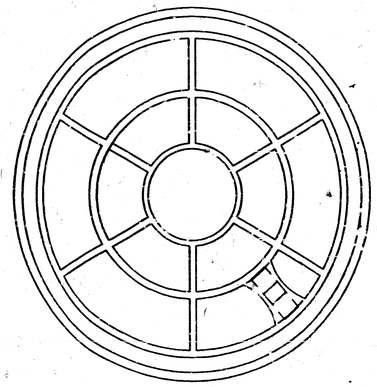

BOTTOM VIEW

PICKHOLE DETAIL

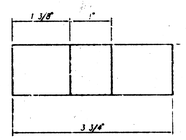

TOP VIEW

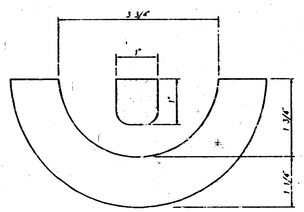

SECTION VIEW

MANHOLE FRAME
Weight = 240 Lbs.

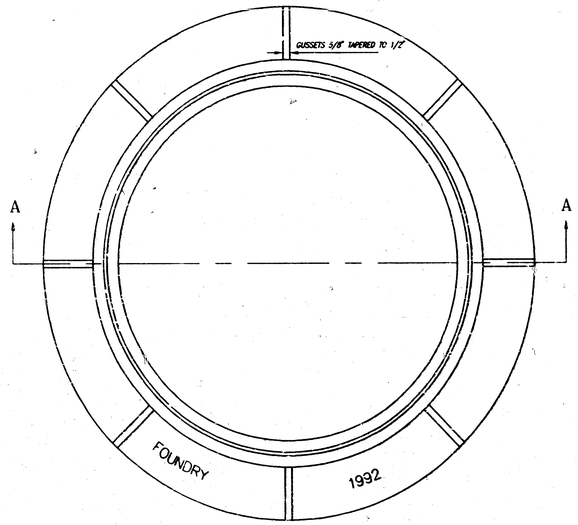

TOP VIEW

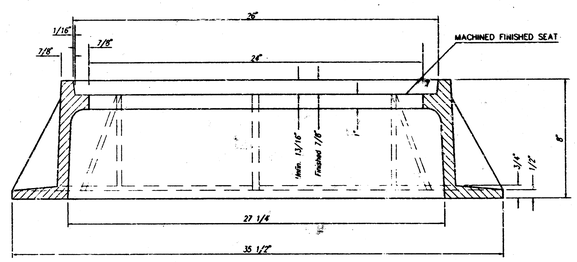

SECTION A–A

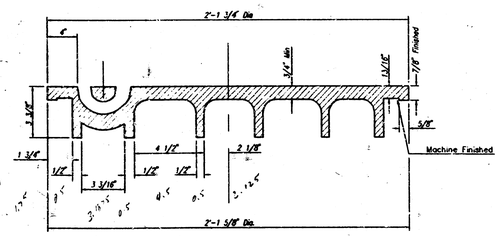

SECTION VIEW

GENERAL NOTES

MANHOLE CASTINGS SHALL BE MANUFACTURED USING GOOD QUALITY GRAY IRON CONFORMING TO CLASS 30 OF A.S.T.M. DESIGNATION A-48. DIMENSIONS AND WEIGHTS SHOWN ON THE DETAILED DRAWINGS SHALL BE CONSIDERED AS MINIMUM REQUIREMENTS AND ANY DEVIATIONS FROM THE DIMENSIONS SHOWN MUST BE SPECIFICALLY APPROVED. THE FINISHED CASTINGS SHALL BE OF UNIFORM QUALITY, FREE FROM BLOWHOLES, POROSITY, HARD SPOTS, SHRINKAGE DISTORTIONS OR OTHER DEFECTS.

MANHOLE CASTINGS SHALL BE MANUFACTURED SUCH THAT A COVER MANUFACTURED BY ANY ONE FOUNDARY WILL FIT INTERCHANGEABLY INTO A FRAME MANUFACTURED BY ANOTHER FOUNDRY AND STILL MEET ALLOWABLE CLEARANCES AND NON-ROCKING REQUIREMENTS. THIS WILL REQUIRE MANUFACTURING OF THE MATCHING FACES ON THE COVER AND THE FRAME TO CLOSE TOLERANCES.

THE OUTSIDE CIRCUMFERENCE OF THE VERTICAL FACE OF THE COVER AND THE INSIDE CIRCUMFERENCE OF THE VERTICAL FACE IN THE FRAME RECESS SHALL BE MANUFACTURED TO TOLERANCES SUCH THAT THE CLEARANCE BETWEEN THE COVER AND FRAME WILL NOT EXCEED 1/8" AT ANY POINT AROUND THE CIRCUMFERENCE OF THE COVER. THE SEATING SURFACES BETWEEN THE COVER AND FRAME SHALL BE MACHINED SUCH AS THESE SURFACES SHALL MAKE FULL CONTACT FOR THEIR FULL CIRCUMFERENCE TO PRECLUDE THE COVER FROM ROCKING IN THE FRAME.

THE MANHOLE FRAME AND COVER SHALL BE MARKED WITH LETTERING INDICATING THE NAME OF THE MANUFACTURER AND THE YEAR WHEN THE COVER OR FRAME WAS CAST. THE COVER SHALL BE FURTHER IDENTIFIED WITH REGARDS TO OWNERSHIP USING LETTERS AT LEAST 1 INCH IN HEIGHT. THIS IDENTIFICATION SHALL BE "CITY OF WICHITA SEWER DEPARTMENT". THE WORD DEPARTMENT MAY BE ABBREVIATED. THE TEXTURE OF THE TOP SURFACE OF THE COVER SHALL BE MANUFACTURED IN A CHECKERED PATTERN DESIGN AS INDICATED ON THE DRAWINGS. SMOOTH BLOCKOUTS SHALL BE UTILIZED TO HIGHLIGHT THE LETTERING ON THE COVER SURFACE. THE TOTAL AREA OF SMOOTH SURFACE BLOCKOUT SHALL NOT EXCEED THE AREA AS INDICATED ON THE DRAWING. POSITIONING OF SMOOTH BLOCKOUTS AND LETTERING MAY VARY FROM THAT SHOWN ON THE DETAILED DRAWINGS.

MANHOLE CASTINGS SHALL WEIGH A MINIMUM OF 180 POUNDS ON THE SOLID COVER AND 240 POUNDS ON THE MANHOLE RING. THIS IS A TOTAL OF 420 POUNDS ON A RING AND COVER SET. CASTINGS WEIGHING LESS THAN THE MINIMUM SPECIFICATIONS WILL NOT BE ACCEPTED.

TO INSURE CONFORMANCE TO TENSILE STRENGTH REQUIREMENTS ALL CASTINGS SHALL BE JULIAN HEAT DATED WITH THE FOLLOWING REQUIREMENTS:

TWO TEST BAR SPECIMENS MUST BE POURED WHEN PRODUCING CITY OF WICHITA CASTINGS. ONE OF THE TEST BAR SPECIMENS SHALL BE SENT TO AN INDEPENDENT LABORATORY FOR TENSILE STRENGTH VERIFICATION TESTING. A TEST REPORT SHALL ACCOMPANY EACH SHIPMENT OF CASTINGS. THE HEAT DATE(S) ON THE CASTINGS SHALL RESPOND TO THE TENSILE STRENGTH REPORT(S). THE TEST REPORT WILL BE PAID FOR BY THE SUPPLIER. THE REMAINING TEST BAR SPECIMEN WILL BE SHIPPED TO SEWER MAINTENANCE AT 715 W. HARRY, WICHITA, KANSAS 67213.

MANHOLE FRAME AND COVER DETAIL ADOPTED AS STANDARD DESIGN BY CITY OF WICHITA, KANSAS	
CITY OF WICHITA, KANSAS M. E. UNDEBAK – CITY ENGINEER	REVISED 6/27/95
PROJ. NO. 468-76-245- -000-000-001	SHEET 9 OF 10

VERTICAL RISER DETAILS

ADOPTED AS STANDARD DESIGN
BY
CITY OF WICHITA, KANSAS
OCTOBER 1992

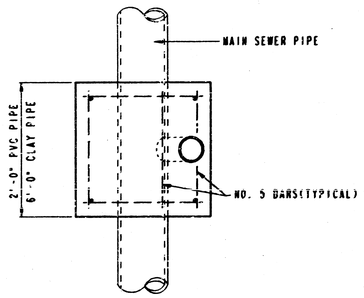

TYPICAL PLAN VIEW

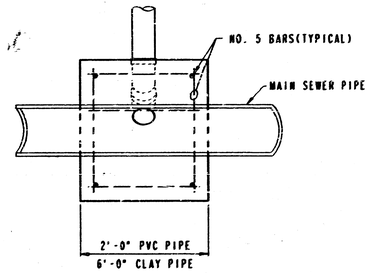

TYPICAL SECTION X-X

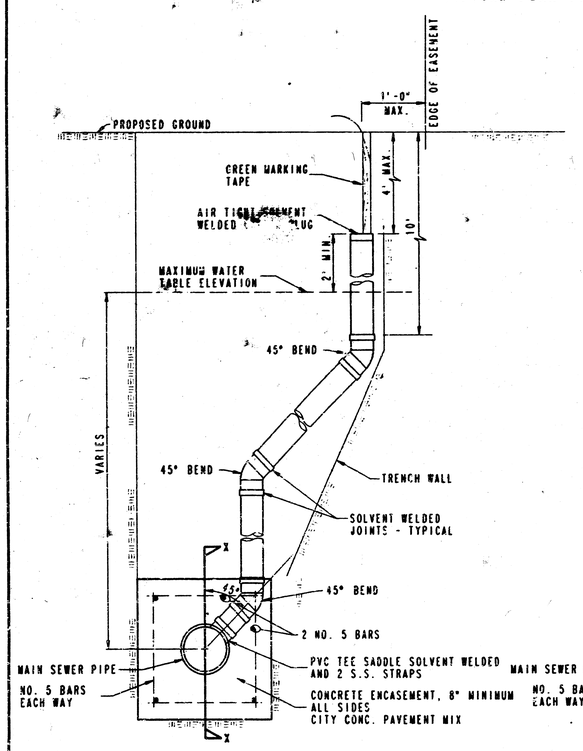

METHOD "A"

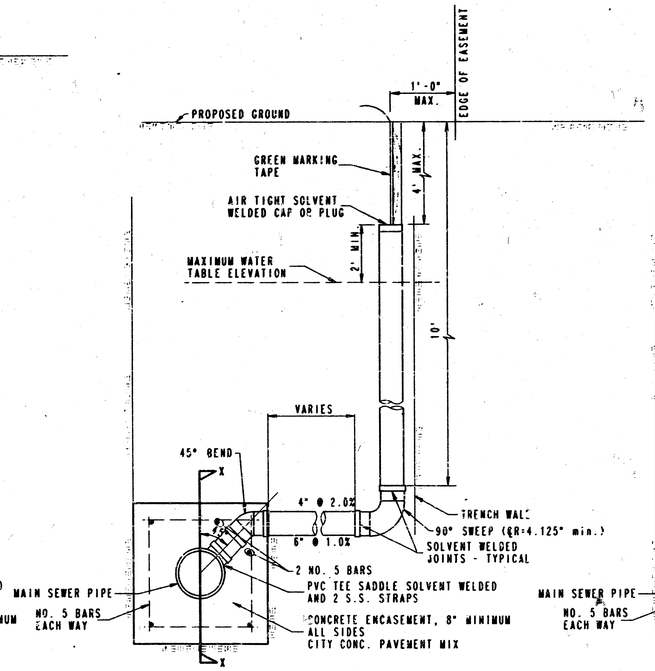

METHOD "B"

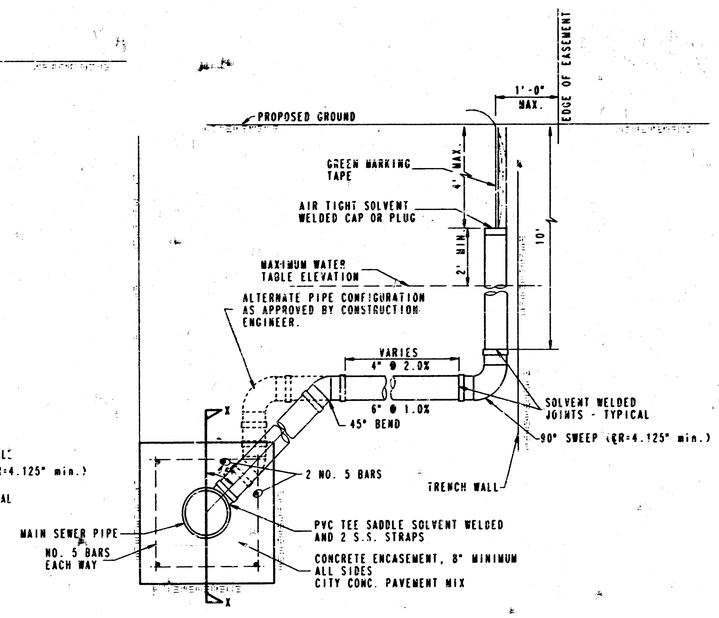

METHOD "C"

NOTE: RISER PIPE REQUIREMENTS AT MANHOLE STUBS SHALL BE SIMILAR TO THOSE SHOWN ABOVE.

GENERAL NOTES

1. RISERS. Risers shall be installed to serve all lots or tracts where the sanitary sewer main is below the water table. Risers shall also be installed to serve all lots and tracts where the sanitary sewer main depth is greater than 7 feet below the proposed ground elevation. Installation of risers because of field conditions shall be as approved by the Construction Engineer. The location of the risers to serve developed property shall be approved by the property owner and the Construction Engineer.

2. PIPE STUBS. Pipe stubs shall be installed in manholes where locations of manholes will provide satisfactory service connection as determined by the Construction Engineer. The vertical distance between the flowline of the manhole pipe stub and the flowline of the sanitary sewer main out of the manhole shall not exceed 2 feet. Risers shall be utilized at manhole pipe stubs as indicated in Note 1. Manhole pipe stubs shall be set such that the top of the stub is not lower than the top of the sanitary sewer main.

3. SIZING. Pipe stubs and risers shall be sized according to the plans and riser table where risers are indicated by the plans. Where risers or pipe stubs are required because of field conditions, the risers and stubs shall be six-inch diameter for commercial or industrial properties and 4" or 6" diameter for residential properties, based on lot size and sanitary sewer main depth. Sizing of risers and stubs shall be approved by the Construction Engineer prior to installation.

4. RISER OR STUB MATERIAL. Risers and stubs shall be constructed of SDR 35 PVC Pipe or Schedule 40 PVC Pipe, meet ng the requirements of the latest revision of A.S.T.M. . All pipe joints shall be solvent welded.

5. REINFORCED CONCRETE ENCASEMENT. Riser connections to clay pipe sanitary sewers shall be reinforced concrete encased both ways from the riser centerline. The reinforced concrete encasement shall extend three feet from the riser centerline or stop at the first sanitary sewer pipe joint within three feet of the riser centerline. Riser connections to PVC Sanitary Sewer mains shall be reinforced concrete encased one foot each way from the riser centerline. The concrete encasement shall be reinforced using reinforcing steel as shown in the appropriate drawing. The concrete shall conform to the City Standard Specifications for concrete pavement.

6. BEDDING. Bedding around the sanitary sewer riser shall be compacted Pipe Bedding Type 1 or 2. The bedding shall be placed and compacted from the depth of the sanitary sewer main to the top of the sanitary sewer riser pipe. Compacted Pipe Bedding Type 1 or 2 shall be required for all risers whether constructed in vertical wall or sloped wall trenches. Bedding material and construction practices shall be approved by the Construction Engineer prior to installation.

7. SUPPORT OF RISERS. Sanitary sewer riser pipe shall be supported during trench backfill. The riser pipe shall be held in a vertical position at all times until trench backfill and compaction has been completed. Contractor's methods for supporting and backfilling the riser pipe shall be approved by the Construction Engineer.

8. PLUGGING. The ends of the riser pipes and manhole stubs shall be plugged using an airtight solvent welded cap or plug. Cap or plug fittings shall be approved by the Construction Engineer prior to installation. Caps or plugs which do not provide an airtight seal will not be a[illegible]

9. TOP OF THE RISER PIPE. The top elevation of a sanitary sewer riser pipe shall be built per plan elevations, unless otherwise directed by the Construction Engineer. Where riser elevations are not shown on the plans, the top of the risers shall be set at an elevation four feet below the proposed ground surface. If ground water is encountered, the top of the riser pipe shall be set at an elevation two feet (min.) above the maximum water table elevation, regardless of the riser elevation shown on the plans.

10. MARKING. Locations of the ends of the sanitary sewer riser pipe shall be marked by fastening green colored plastic tape to the end of the riser. The tape shall be supported by a length of wooden 2 x 4, extending from the top of the riser pipe to the proposed ground surface. The green tape shall be visible and extend one foot above the proposed ground surface. The green tape shall be 4 mil Polyethylene film with a minimum width of three inches, specifically manufactured for the purpose of identification of underground sewers.

11. LOCATION MEASURES. The project inspector shall record and document the location of all risers constructed as measured from the nearest manhole, indicating the direction from the manhole, the direction and distance from the main, riser size, and elevation of the top of the riser.

12. RISER LOCATION. The riser shall be located per plan if shown. If not shown on the plan, the riser shall be located at the center of the lot, within one foot of the property side of the easement for the lot being served. All riser locations shall be approved by the Construction Engineer prior to installation.

13. PAYMENT. "Sanitary sewer risers" shall be paid for at the contract unit price per each, which price shall be full compensation for all pipe, fittings, marking tape, length of wooden 2 x 4, reinforced concrete encasement, support during backfill, backfill, labor, site restoration, and any other items necessary to complete the work.

"Manhole stubs" shall be paid for at the contract unit price per each, which shall be full compensation for all labor, material, and incidentals necessary to complete the work including all pipe, fittings, reinforced concrete encasement, and all other items as required and listed for "Sanitary Sewer Risers".

PLAN	DATE
CHECKED	BY
CHECKED	